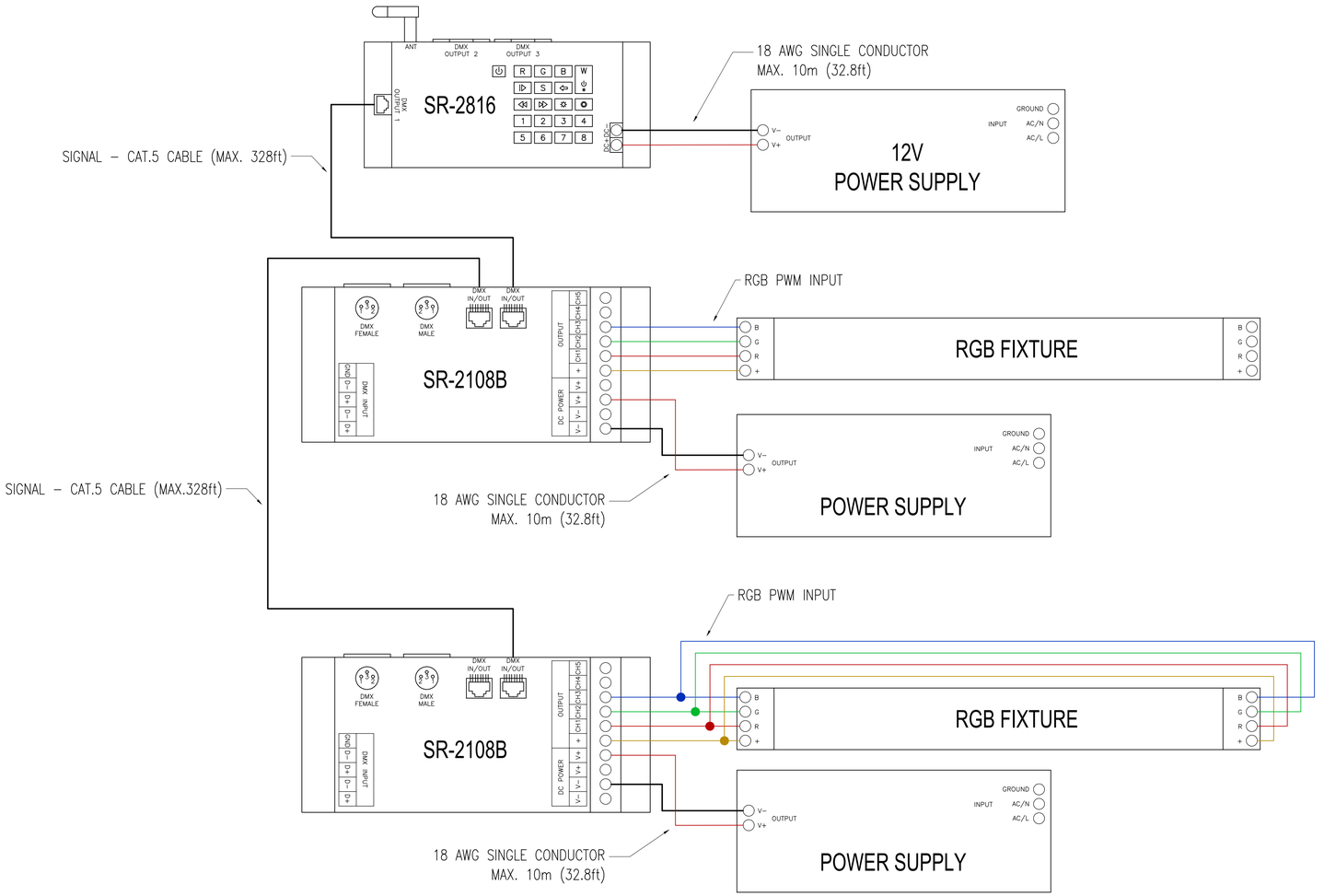

GREEN LED LIGHTING SOLUTIONS

GENERAL NOTES

1. Please note that our fixtures can only be cut in pre–determined lengths, which are multiples of the Cutting Unit (CU) of the selected product. Due to that physical restriction, the product provided will not always have the exact same length as required. Please examine carefully the attached spreadsheet or order instructions to ensure the proposed quote is suitable to your project needs.

2. Any assistance GLLS provides in preparing drawings (CAD or Otherwise), Takeoffs, Layouts, Run lengths, or any other assistance in order planning – is not warrantied. GLLS provides this assistance as a courtesy. It is the customer's responsibility to review and approve any such information and confirm accuracy.GLLS uses its best efforts in providing this assistance but is not on location and not privy to first–hand job information. Therefore, any inaccuracies later discovered are not covered under GLLS' warranty and will not be remedied at GLLS' expense. PLEASE REVIEW CAREFULLY AND ASK QUESTIONS PRIOR TO APPROVAL.

3. GLLS products are built to withstand harsh conditions, but mishandling will damage the internal circuit board and will not be covered under warranty. The handling document must be signed by the general contractor and returned to GLLS before any warranty claims can be made.

Product:
NEON FLEX RGB
(S270; S160; WAVE; WAVE 320)

Project:
WIRING DIAGRAMS

Title:
NEON FLEX RGB –
SR–2816 + SR–2108B

Date:	AUG 26, 2020		
Drawn:	TRUONG/J.S		
Scale:	NTS	**Rev:**	00