Wall mounted RGB/W DMX512 Master

SR-2816/SR-2816Wi



Feature

- Touch sensitive
- Glass interface(White & Black)
- Control 8 zones synchronously and separately
- Save up to 8 color in each zone

Parameter

Part No.	Operation Voltage	OUTPUT	DIMENSIONS ø/h (mm)	Remarks
SR-2816	12VDC	DMX512 Signal	75x165x38	Match SR-2818 Remote
SR-2816Wi	12VDC	DMX512 Signal	75x165x38	Match IOS/Android

Product Size

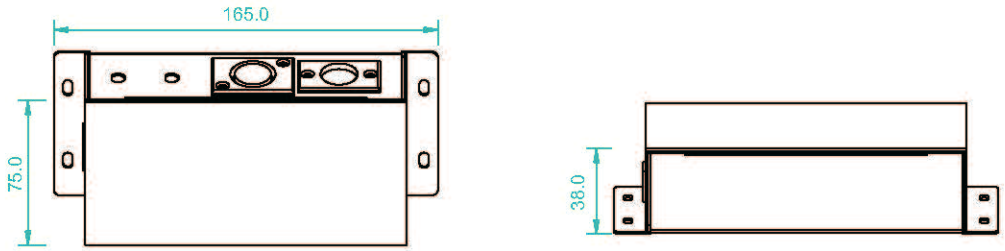

Button introduction

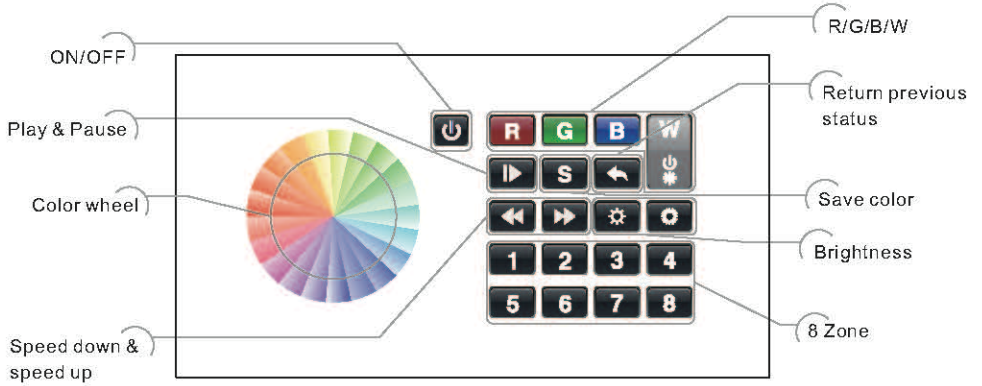

Wiring diagram

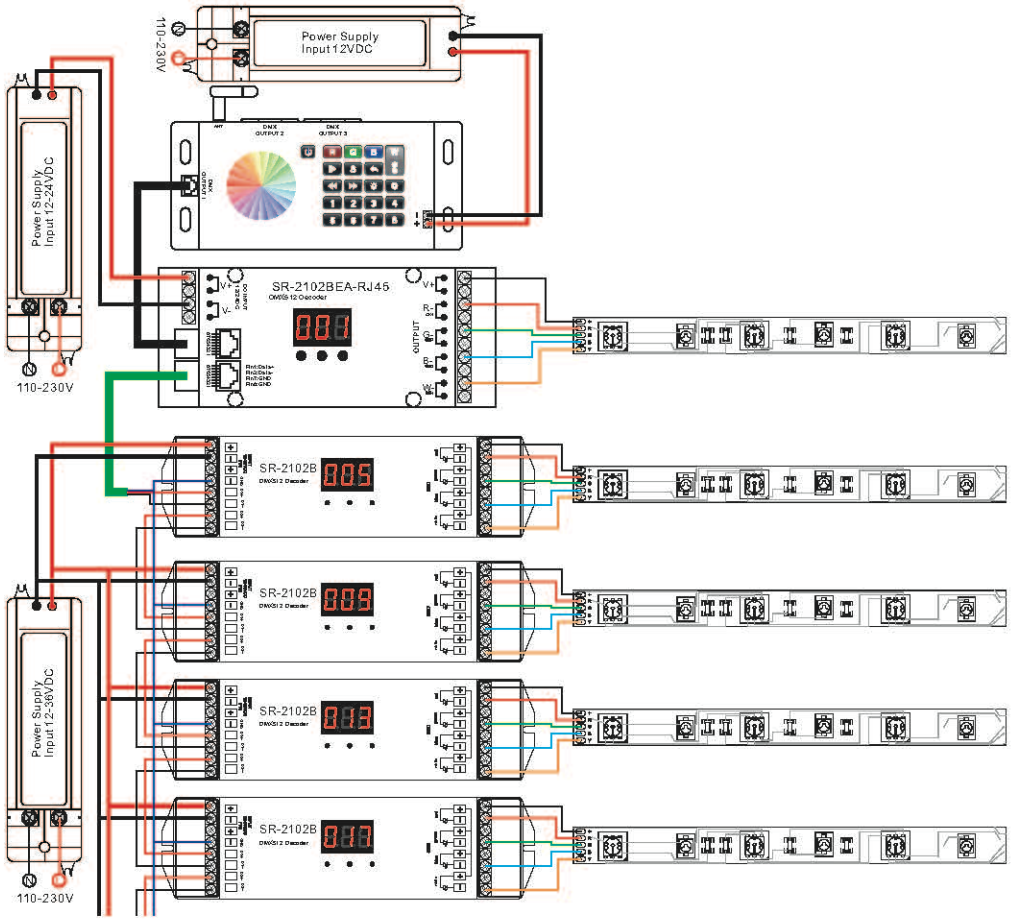

Operation

1. Connect DMX decoder similar the wiring diagram

2. Set zones by DMX Addresses on decoders

SR-2816 has 8 zones, please set the connected DMX512 decoders' addresses as below:

DMX decoders' address 001 for zone 1, DMX decoders' address 005 for zone 2

DMX decoders' address 009 for zone 3, DMX decoders' address 013 for zone 4

DMX decoders' address 017 for zone 5, DMX decoders' address 021 for zone 6

DMX decoders' address 025 for zone 7, DMX decoders' address 029 for zone 8

Each zone can pair endless of dmx decoders if you set the address accordingly.

3. Learning ID(only for SR-2816)

3.3.1 Turn on the remote,the signal light will flash when you touch.

3.3.2 First press the Learning button on 2816,then touch any button on the remote.

3.3.3 Lights flashing means ID was learnt.

3.3.4 Long press the learning button 5-10 Seconds until it flash, then the ID would be released.

3.3.5 Play by Panel SR-2816

4. Touch R G B W button is to switch on/off of each corresponding color.

Hold your finger on R G B W button to dim brightness of each corresponding color. There are total 8 levels of brightness.

Note: If you press R, then press G, then it is mix color of R and G. If you want to get G color directly, please press R to switch off of R first. Then press G.

5. Touch button is to play mode or do pause operation of mode. There are 10 build-in modes in this button.

6. Touch S button is for saving color or mode at 1-8 buttons. Each zone (Each receiver) can save 8 modes or 8 colors. Operation is show as below:

Choose zone number 1 2 3 4 5 6 7 8 ----> Touch button, mode is running -----> save favorite mode to button 1 2 3 4 5 6 7 8 1 zone-----> touch S (over 2 seconds) to save program into zone until the blue indicator on.

Choose zone number 1 2 3 4 5 6 7 8 ----> Touch color wheel to get favorite color -----> save favorite color to button 1 2 3 4 5 6 7 8 in 1 zone-----> touch (over 2 seconds) to save color into zone until the blue indicator on.

If you want to play your saved color or mode, choose zone number from 1 to 8, then touch S ,then touch saved number in that zone. Then it will play.

7. Touch button to return previous color or running mode.

8. Touch button to speed down when mode is running, touch button to speed up when mode is running.

9. Touch button to dim down brightness of RGB channels, touch button to dim up RGB channels. "W" channel is separated from RGB channels, so we can only long press W button to dimming "W" channel.

10. Touch 1 2 3 4 5 6 7 8 button one by one, such as press button 1,2,3,4,5,6, then press button.1,2,3,4,5,6 will run synchronized mode, after long press, LED lighting will flash twice, they will switch to chasing running mode, long press again to switch back.

The difference among SR-2815, 2816& 2817 SR-1003RCDMX

SR-2815 is DMX signal output to connect DMX decoder.

Could be remote controlled by 2806(10zones RGBW), 2804(CCT dimming) 2809(RGB).

Multi-zone control by this DMX master would also need multi SR-2815s.

SR-2816 is a DMX wall master controller, with 8zones.

Zones could be set by DMX addresses, also could be RF and WIFI controlled by remote and IOS/android.

SR-2817 is AC DMX master of DMX signal output to connect DMX decoder. One 2817 could be individually controlled (8zones) by remote and WIFI, zones set by DMX address.

SR-1003RCDMX works as DMX decoder, connect led lightings directly and could be remote controlled by SR2806.

IOS or android system connection to the SR-2816Wi



a.Open wifi connection setting interface, connect your phone to EASYCOLOR network.

b.Open EASYCOLOR installed on the phone , press to the setting interface, and enter the following:
SSID:EASYCOLOR
IP:10.10.100.254 8899
Name: (the name you want or don't enter anything.)

c.Press button to turn it on ,and press button Back to back to the main operation interface.

Safety & Warnings

1) The product shall be installed and serviced by a qualified person.
2) IP20.Please avoid the sun and rain. When installed outdoors, please ensure it is mounted in a water proof enclosure.
3) Always be sure to mount this unit in an area with proper ventilation to avoid overheating.
4) Please check if the output voltage of any LED power supplies used comply with the working voltage of the product.
5) Never connect any cables while power is on and always assure correct connections to avoid short circuits before switching on.
6) Please ensure that the cable is secured tightly in the connector
7) For update information please consult your supplier.

Warranty Agreement

1) We provide lifelong technical assistance with this product:
- 5-year warranty. We print date on every products, for example :1125 means year 2011,week 25.The warranty is for free repair or replacement and covers manufacturing faults only.
- For faults beyond the 3-year warranty we reserve the right to charge for time and parts.

2) Limited Warrenty
- Any defects caused by wrong operation.
- Any damages caused by unauthorized removal, maintenance, modifying, incorrect connection and replacement of chips.
- Any damages due to transportation, vibration etc. after purchase.
- Any damages caused by earthquake, fire, lightning, pollution and abnormal voltage.
- Any damages caused by negligence, inappropriate storing at high temperatures and humidity or near harmful chemicals.
- Product has been updated

3) Repair or replacement as provided under this warranty is the exclusive remedy to the customer.