Complex Lighting Made Simple

Din Rail 5 in 1 (Triac/0-10V/1-10V/Potentiometer/10V PWM) Dimmable LED driver

Features：






·Output constant voltage
·Input voltage range: 100-277VAC
·UL/cUL listed, Class 2, Class P, FCC approval
·Built-in PFC function / Efficiency > 83% / PF> 0.99
·Dimming range: 0~100% / load:10~100%
·Protections:short circuit/over voltage/over heat
·IP20 design for indoor dry or damp environment installations
·Cooling by free air convection.
·Dimming mode:

1) forward phase /leading edge ,MLV and Reverse phase /trailing edge ,ELV,TRIAC dimmers.

2) 0-10V/1-10V/Potentiometer/10V PWM 4 in 1 available
Full protection plastic housing, for dry, damp location only.

·Strong compatibility, flicker-free dimming
·Dimming range: 0~100%
·Suitable for LED lighting and moving sign applications
·Compliance to worldwide safety regulations for lighting
·7 years warranty

12VDC, 24VDC / 60W, 100W available

Specification:

CE IP20 Class2 ClassP

model		PS-012-100TDDR	PS-024-096TDDR2
Output	DC Voltage	12VDC	24VDC
	Voltage Accuracy	±5%	±5%
	Rated current	8.33Amp	4.0Amp
	Rated power	100W	96W (Class 2)
	Voltage Regulation	±0.5%	
	Load Regulation	±1%	
Input	Voltage Range	100-277 VAC	
	Frequency Range	47～63HZ	
	Power Factor (Typ.)	0.98@120VAC ,0.95@277VAC	0.98@120VAC ,0.95@277VAC
	THD(Typ.) @ full load	<20%@120VAC & 277VAC	
	Full Load Efficiency	83%@120VAC, 85%@277VAC	83%@120VAC, 86%@277VAC
	AC Current（Typ.）	1.3A	
	Inrush Current（Typ.）	20A, 50%, 1.6ms @120VAC; 25A, 50% 1.2ms @277VAC	
	Leakage current	<0.5mA	
Protection	Short Circuit	shut down o/p voltage, re-power on to recover after fault condition removed	
	Over Loading	≤120% Hiccup mode,recovers automatically after fault condition is removed	

	Over temperature	100℃±10℃ shut down o/p voltage, automatically recover after cooling.
Environment	Working TEMP.	-40～+60℃
	Working Humidity	20～90%RH,non-condensing
	Storage TEM.,Humidity	-40～+80℃，10～95%RH
	TEMP.coefficient	±0.03%/℃（0～50℃）
	Vibration	10～500Hz，2G 10min./1 cycle，period for 60min. each along X,Y,Z axes
Safety&EMC	Safety standards	UL: E-524991 , CAN/CSA-C22.2 No.250.13
	Withstand voltage	I/P-O/P:1.88KVac
	Isolation resistance	I/P-O/P:100MΩ/500VDC/25℃/70%RH
	EMC EMISSION	FCC 47 CFR Part 15 ,Subpart B
Others	Weight	0.4Kg
	Size	55*90*100mm(L*W*H)
	packing	50PCS/CTN , carton size:330*330*130mm
Notes	1. All parameters NOT specially mentioned are measured at 110VAC, 277VAC input , Rated load and 25℃of ambient temperature. 2. Tolerance:includes set us tolerance,line regulation and load regulation . 3. The power supply is considered as a component that will be operated in combination with final Equipment. Since EMC performance will be affected by the complete installation, the final equipment manufactures must be-qualify EMC Directive on the complete installation again.	

■ Mechanical Specification

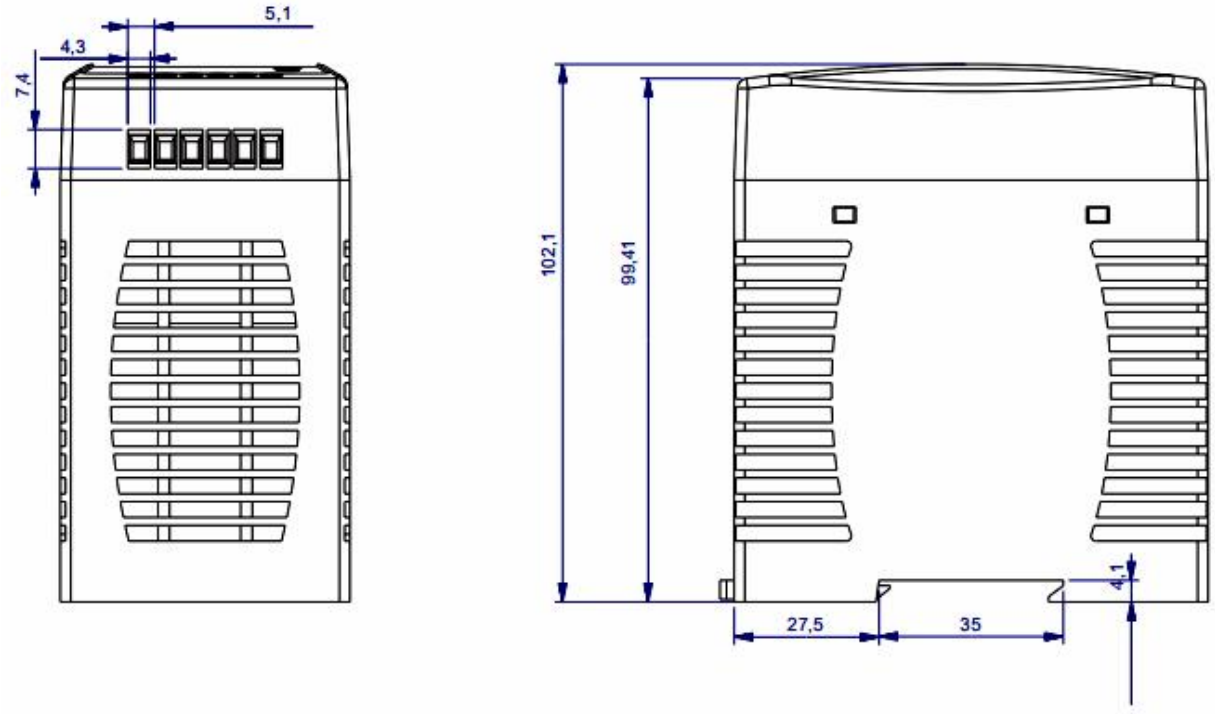

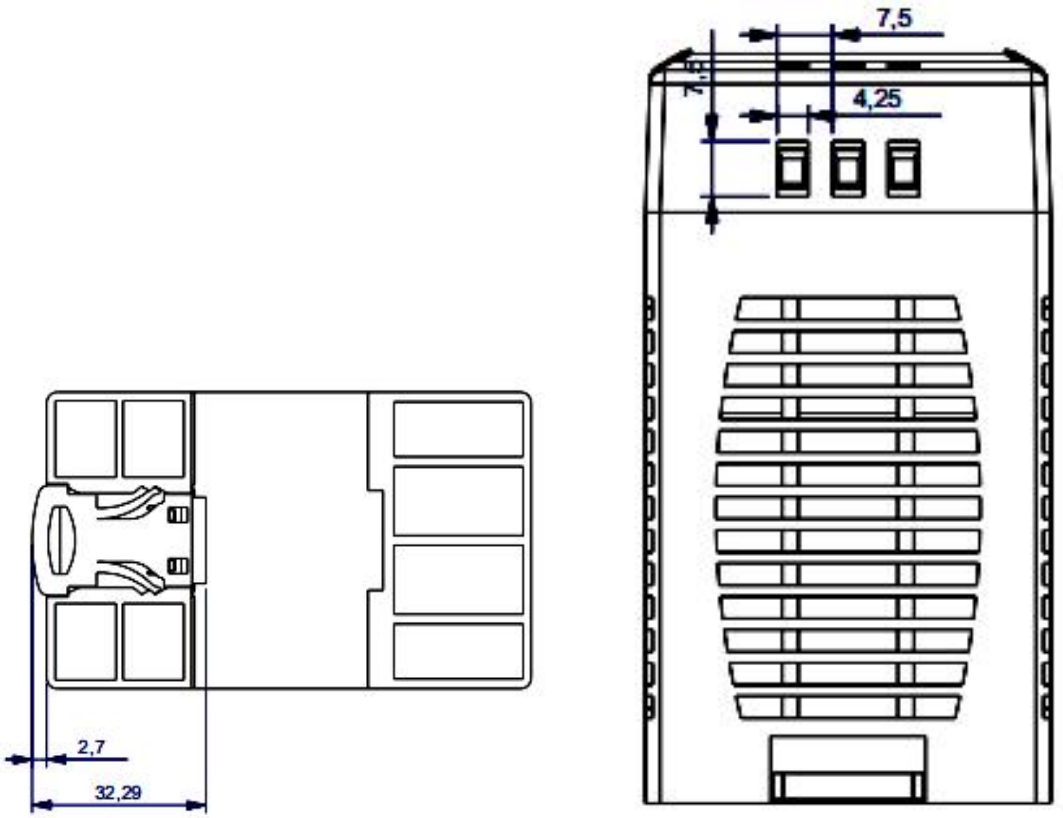

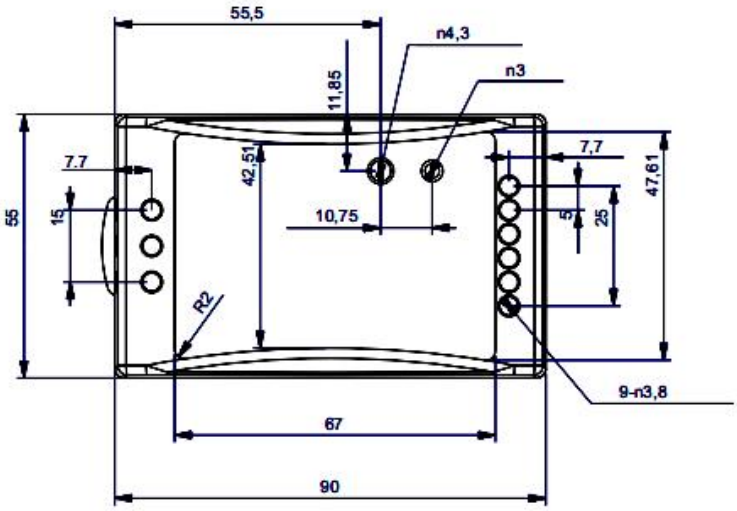

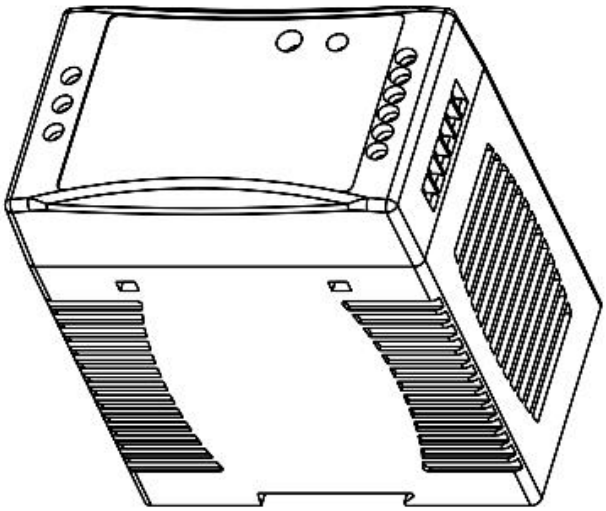

- Fix it to the Din Rail size:TS35/7.5 or TS35/15 (Note: Din rail is exculded to the power supply)
- Input with terminals Live(L) and Neutral(N) wires to be connected AC;
- Output LED SEC output Positive (LED+) , output negative(LED-). Connected to LED light.
- Output terminals DIM (+) to 0/1-10V dimmer signal(+),DIM (-) white connect to 0/1-10V dimmer signal (-)
- Please DO NOT connect “DIM-“ to “LED-“, “DIM+” to “ LED+” ,or other incorrect connection.
- Please make sure your connect these correctly otherwise your product will not function correctly and could be damaged.

■Derating Curve

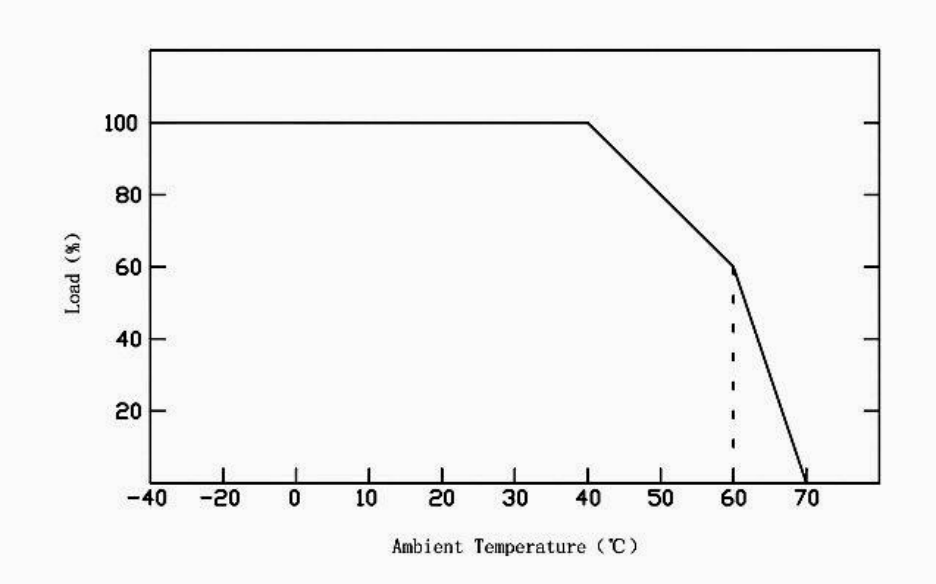

- Please refer to the Derating Curve and derate according to the temperature to extend their life.

■ Dimming Operation and Connecting Diagram

- **Using two ways of dimming at the same time,** customers should be assured that LED lighting is up to the max. Brightness then you could operate with the other dimming;

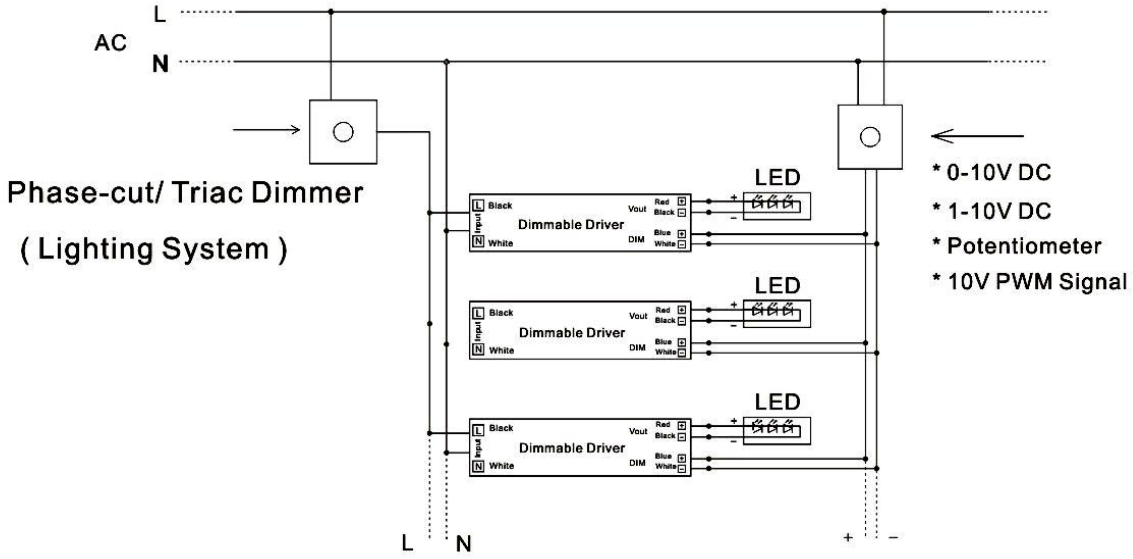

Triac/ 0/1-10V 5 in 1

Using one dimming ---TRIAC/Phasecut dimming

- The Pulse-Width Modulation (PWM) of output voltage can be adjusted through input terminal of the AC phase line(L) by connection a phase /Triac dimmer of lighting system.
- Working with forward phase /leading edge ,MLV and Reverse phase /trailing edge ,ELV,TRIAC dimmers
- Min loading is about 10%
- Please try to use dimmers with power at least 1.5 times as the output power of the driver.

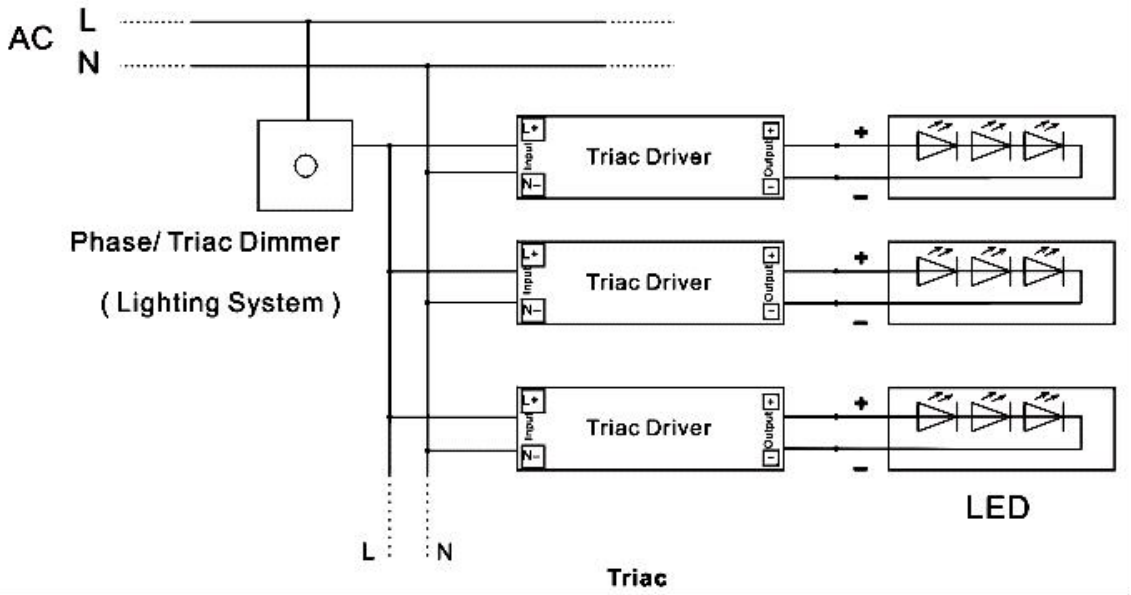

- **Using one dimming ---0-10/1-10V Dimming**

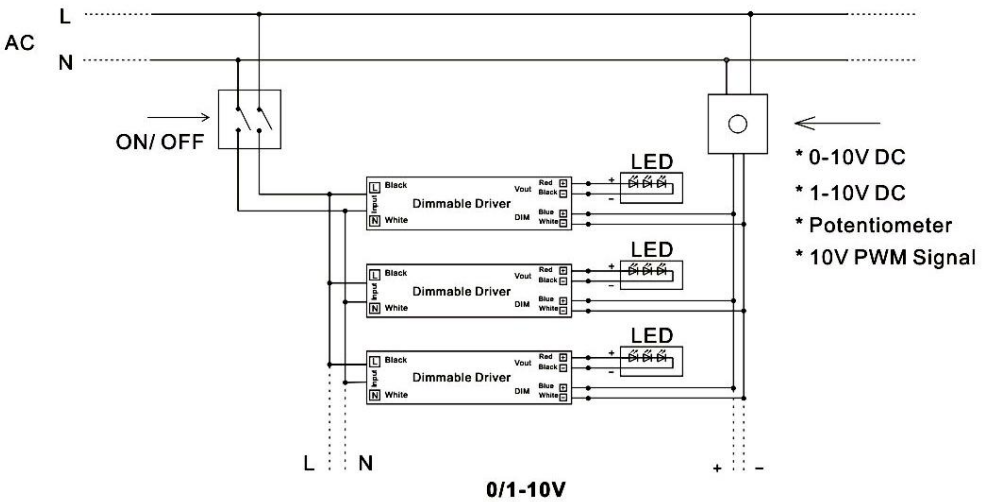

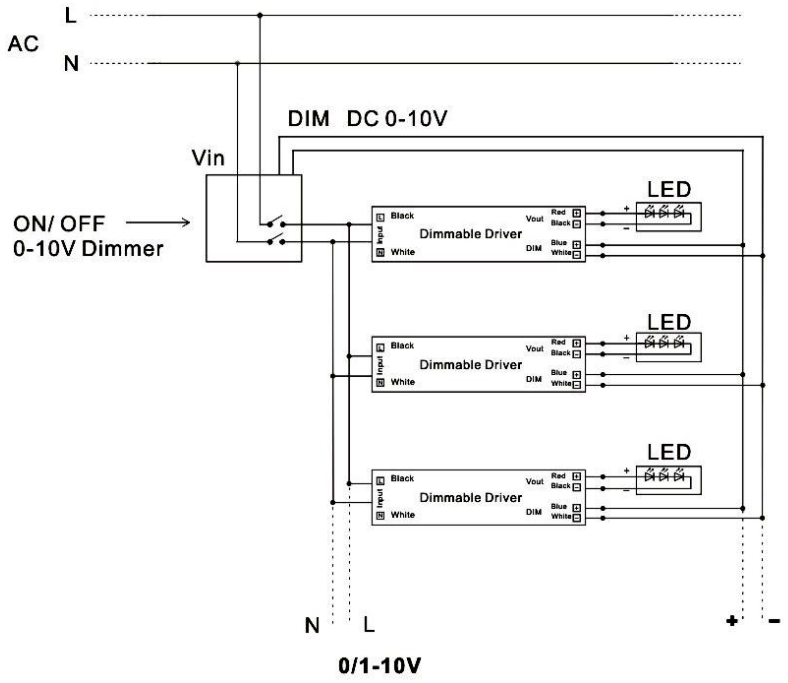

■ Instruction:

- This driver should be installed by qualified and professional person;
- Please make sure the driver is installed with adequate ventilation around it to allow for heat dissipation.
- Ensure that wiring is correct before test in order to avoid light and power supply damage;