LEDneon·flex

Version 2.0



VIVID PVC 120V

UL2388

LED LIGHT STRIP STATIC

Table of Contents

Specifications	2
Technical Specification	2
Physical Specifications	3
Part Number Naming Convention	3
Connectors	4-5
Power Cord	4
Extension	4
Seamless End Exit	4
Female Connector	4
Male Connector	4
Plug and Fixture	5
Mounting Hardware	6
Plastic & Aluminum	6
Plastic	6
PC Clip	6
Testing	7-9
Certifications	7
Fixture Testing	7
Charts	8-9
Packaging	9

c UL us LISTED E347880 CE RoHS COMPLIANT INDOOR USE OUTDOOR USE IP68 DMX RDM DALI DIMMABLE

For More Information

Toll Free: 1 (888) 580-6366

Or Visit www.GLLS.com /contact-us/

Technical Specifications

Light Dimension 0.61 x 0.24in (15.5x6mm) 25LEDs/ft (84 LEDs/m)

Output	Red/Amber/Green/Blue/ White
LED Light	SMD LED Chip
Max Run Length	
Single Feed	131.2ft (40m)
Light Surface	Flat Profile 160°
Lumen Maintenance	70,000 Hours L70 @ 25°C : 90,000 L50 @ 25°C 50,000 Hours L70 @ 50°C : 70,000 Hours L50 @ 50°C
Electrical	
Input Voltage	120V AC
Power Consumption	1.83W/ft (6W/m)
Physical	
LED Count	25 LEDs/ft (84 LEDs/m)
LED Spacing	0.47in (11.94mm)
Cutting Unit Length	19.7in (500.38mm) (42 LEDs)
Thermal Management	Free air convection
Fixture Connections	End & middle lead wires
Minimum Bend Diameter	1.97in (50mm) (Top Bending)
Temperature Ranges	
Installation	41°F to 95°F (5°C to 35°C)
Operating	-4°F to 95°F (-20°C to 35°C)
Humidity	0-95% non condensing
Dependability	
Warranty	5 Year Limited Warranty
Safety	
Certification	Tested to UL & CSA by Underwriters Laboratory for use in USA and Canada, complies with California Title 24 Requirements, Lighting Facts. Exceeds ANSI C78.377A, CE & RoHS Compliant.
IP Rating	Dry/Damp/Wet with appropriately rated accessories

Available Colors

Color	Wavelength/CCT
Red	618-624nm
Green	522-528nm
Blue	468-474nm
Amber	588-594nm
2200K	2238 ± 102K
2700K	3725 ± 175K
3000K	3045 ± 275K
3500K	3455 ± 245K
4000K	3985 ± 275K
5700K (DW)	5669 ± 355K

Lumen Count

Color	Per Foot	Per Meter	Power
Red	>54.86lm	>180lm	1.83W/ft (6W/m)
Green	>152.4lm	>500lm	1.83W/ft (6W/m)
Blue	>25.9lm	>85lm	1.83W/ft (6W/m)
Amber	>54.86lm	>180lm	1.83W/ft (6W/m)
2200K	>152.4lm	>500lm	1.83W/ft (6W/m)
2700K	>152.4lm	>500lm	1.83W/ft (6W/m)
3000K	>152.4lm	>500lm	1.83W/ft (6W/m)
3500K	>152.4lm	>500lm	1.83W/ft (6W/m)
4000K	> 152.4lm	>500lm	1.83W/ft (6W/m)
5700K	>152.4lm	>500lm	1.83W/ft (6W/m)

Physical Specifications



Beam Angle	Bending Diameter	Flame Resistant	UV Resistant	Solvents Resistant	Saltwater Resistant	IP 65 Protection	IK08 Protection	5 Year Warranty

Light Profile

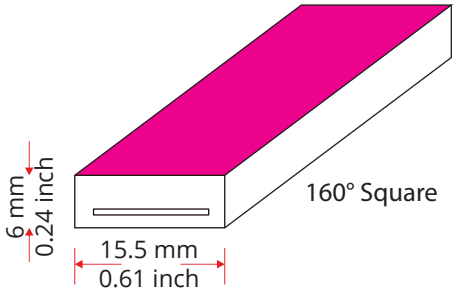

Bending Direction

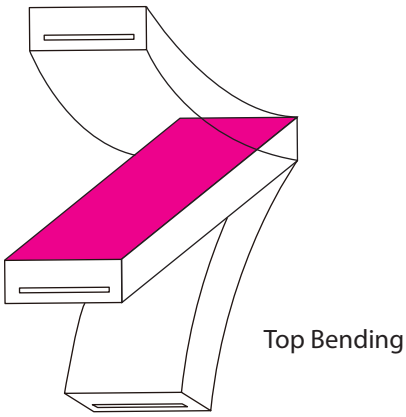

Minimum Bending Diameter

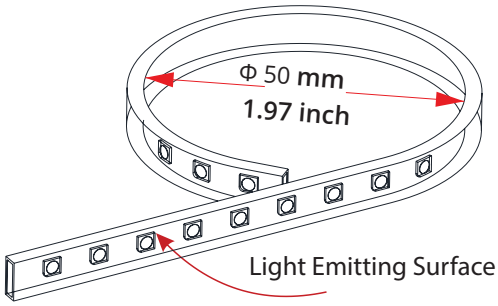

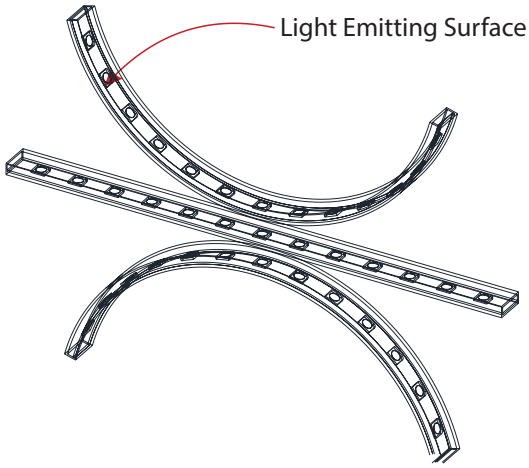

Part Number Naming Convention

LS-15G-C-12-2W-E-XXX-120P

LED Color (3 digits)

For full part number naming rules, please refer to the document on www.glls.com/support/documentation/

Connectors

Power Cord



SA-15G-I-00-2W-SE-0-P4-1M4-P

Power Cord

4.59ft power cord with 5A backup fused plug. For use indoors or with a weatherproof cover only.

Power cord has female connector to connect with the extension.

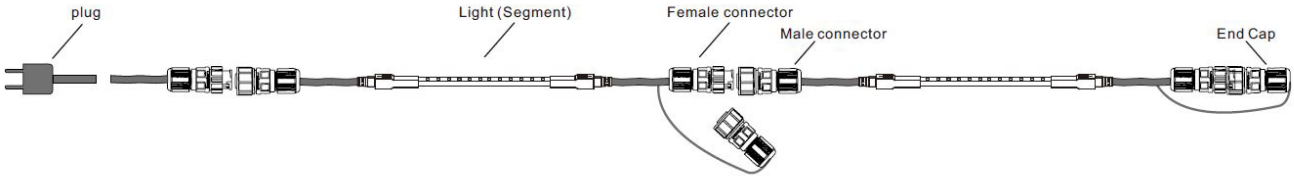



SA-15G-I-00-2W-SE-0-P1-0M3-P

Extension

Used to extend your light, has seamless conectors on both ends.

Each light extension can be up to 20m / 65.6 feet. If you don't need a length over 20m / 65.6 feet, install the attached end cap on the female connector.

Connectors

Seamless End Exit



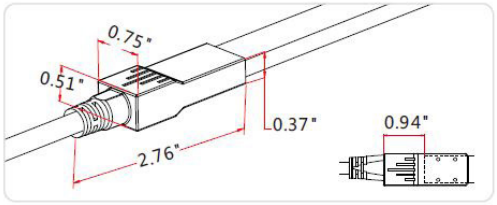

Female Connector



Male Connector





SA-15G-I-00-2W-SE-0-J1-0M3-P

Light

Submersible Seamless for front and end cap.

The male connector is installed to connect to Power Cord

Plug And Fixture



Plug and fixture

IP65 seamless connectors, suitable for wet or dry environments

4.59ft power cord with 5A backup fused plug. For use indoors or with a weatherproof cover only.

Plug



Seamless End Lead

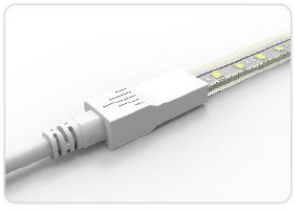

Seamless End Cap



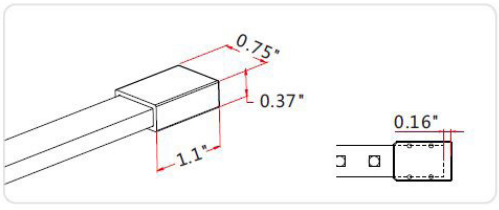

Mounting Hardware

Standard Anodized Aluminum Channel

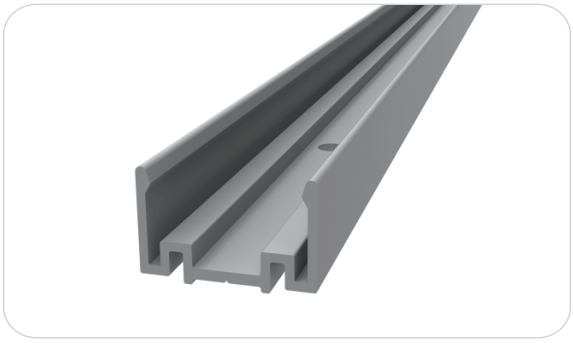

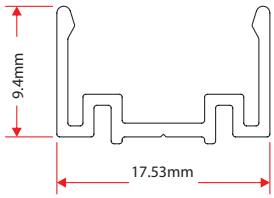

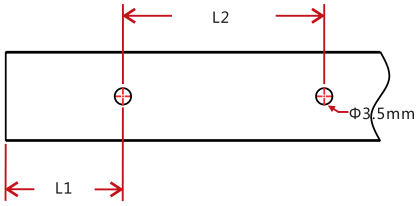

W x H	Standard Length	Part Number	L1	L2	Screw Hole Φ	Hole #
0.54 x 0.87in	11.8in (300mm)	CL-15-R-AL-3C5-SD	1.97in (50mm)	7.87in (200mm)	Φ0.14in (3.5mm)	2
(13.8 x 22mm)	19.69in (500mm)	CH-15-R-AL-0M5-SD	1.97in (50mm)	7.87in (200mm)	Φ0.14in (3.5mm)	3
	39.37in (1000mm)	CH-15-R-AL-01M-SD	3.94in (100mm)	7.87in (200mm)	Φ0.14in (3.5mm)	5
	78.74in (2000mm)	CH-15-R-AL-02M-SD	3.94in (100mm)	7.87in (200mm)	Φ0.14in (3.5mm)	10

Plastic Channel



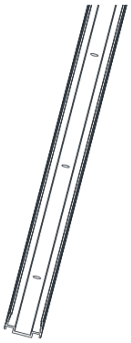

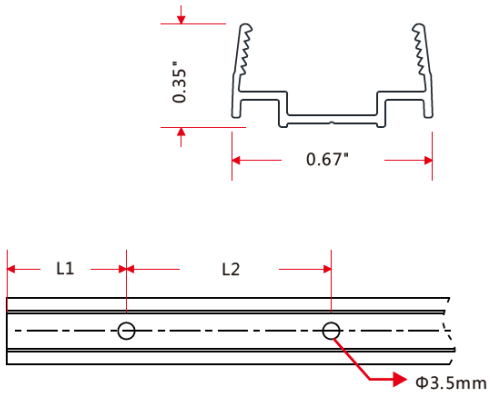

W x H	Standard Length	Part Number	L1	L2	Screw Hole Φ	Hole #
0.55 x 0.94in	19.69in (500mm)	CH-15-R-PL-0M5-SD	1.97in (50mm)	7.87in (200mm)	Φ0.14in (3.5mm)	3
(14 x 24mm)	39.37in (1000mm)	CH-15-R-PL-01M-SD	3.94in (100mm)	7.87in (200mm)	Φ0.14in (3.5mm)	5
	78.74in (2000mm)	CH-15-R-PL-02M-SD	3.94in (100mm)	7.87in (200mm)	Φ0.14in (3.5mm)	10

PC Clip

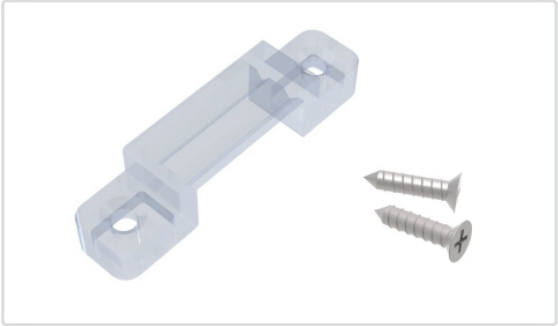

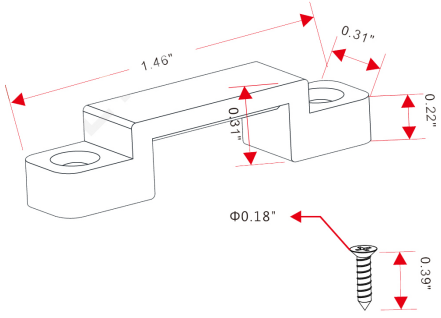

Testing

Certifications

	Testing Organization	Certificate Serial N°	Report Reference
UL 2108	UL	20160726-E360029	E360029-2013
CE-EMC	SGS	SZEM1702001259LMV	SZEM160600421302

Fixture Testing

Optical Testing

Spectrum Analysis	IES LM 79 (Lumen, CCT, CRI, XY, SDCM, wavelength)
Photometric Distribution	IES LM 73 (Lumen intensity distribution & Lux diagram)
Lumen Maintenance & Lifetime	IES LM 84 & IES TM28

Temperature Testing

Normal Temperature Test	UL1598 & UL2388 & IEC60598-1 & IEC60598-2-21
Abnormal Operation Test	UL1598 & UL2388 & IEC60598-1 & IEC60598-2-21

Durability Testing

Bending Test	Manufacturer-defined, 500 cycles
Swing Test	UL2388, >750 cycles
Tensile Test	Manufacturer-defined, > the weight of light in max. connection length double feed
Twist Test	Max connection length double feed Manufacturer-defined, >200 cycles
Ball Impact	UL1598 & UL2388 & IEC60598-1 & IEC60598-2-21
IK07 IK08	IEC62262

Environmental Testing

Chlorinated Water Immersion	BG9667, PH6.8-7.6, free chlorine 0.3-0.6mg/L
Salt Water Immersion	IEC60598-1, Sailinity 4%
Salt Spray Test	IEC68-2-11
Outdoor Exposure	Manufacturer-defined
Flame Resistance	UL94
UV Exposure	ASTMG 154, ISO 4892-3, UVA @ 340nm
IPX5, IPX6, IPX7, IPX8	IEC60529
Temperature Shock	Manufacturer-defined, -40°C - 60°C (typical temperature range)
Constant Temperature	Manufacturer-defined, 70°C (typical temperature range)

Testing

Charts

ANSI STANDARD

Nominal CCT Categories

Nominal CCT	Target CCT and tolerance(K)	Target D_{uv}	D_{uv} Tolerance Range
2200K	2238 ±102	0.0000	Tx:CCT of the source
2500K	2460±120	0.0000	For Tx<2870K
2700K	2725 ±145	0.0000	0.000±0.0060
3000K	3045±175	0.0001	For Tx≥2870K
3500K	3465±245	0.0005	Duv(Tx)±0.0060
4000K	3985±275	0.0010	where
4500K	4503±243	0.0015	Duv(Tx)=57700 x (1/Tx)2
5000K	5029±283	0.0020	-44.6 x (1/Tx)
5700K	5667±355	0.0025	+0.00854
6500K	6532±510	0.0031	
Flexible CCT (2200-6500K)	T_F [1] ±ΔT [2]	$D_{uv}T_F$ [3]	

Remark:

1) T_F is chosen to be at 100K steps (2300,2400,.....,6400K),excluding the ten nominal CCTs listed in Table 1.
2) $\Delta T=1.1900x10^{8}xT^{3}-1.5434x10^{4}xT^{2}+0.7168xT-902.55$
3) Same as in the D_{uv} Tolerance Range.

(X,Y) Chromaticity Diagram

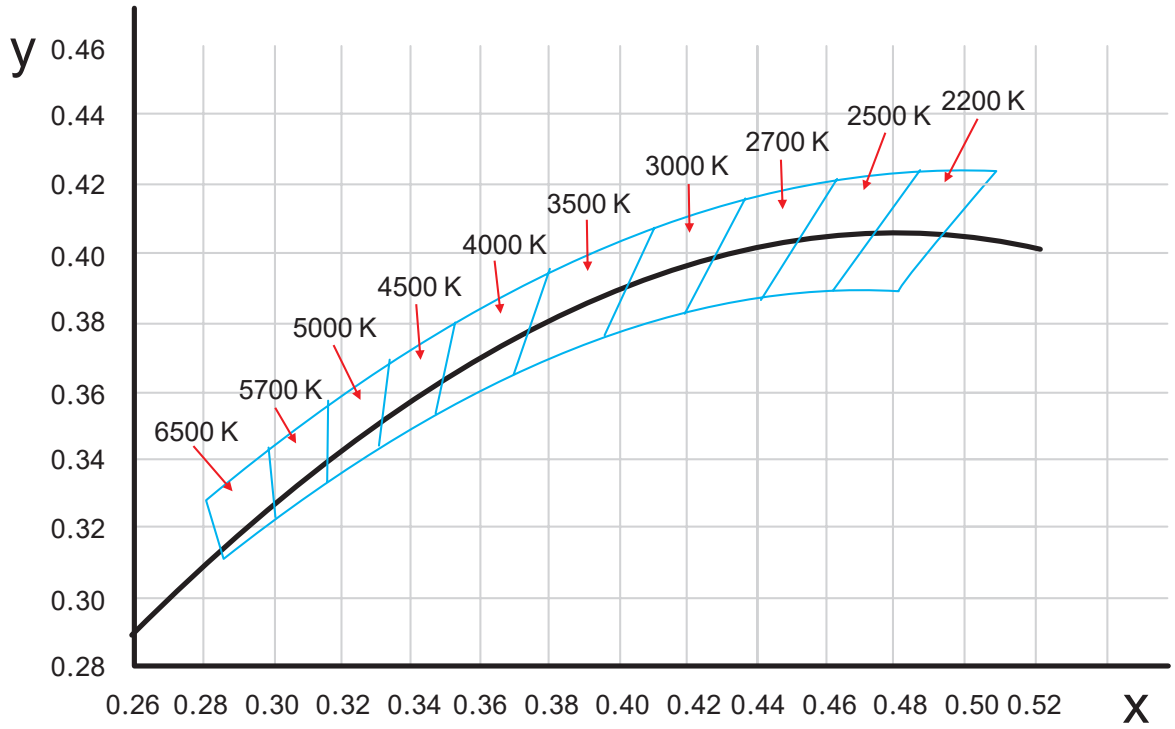

Testing

Charts

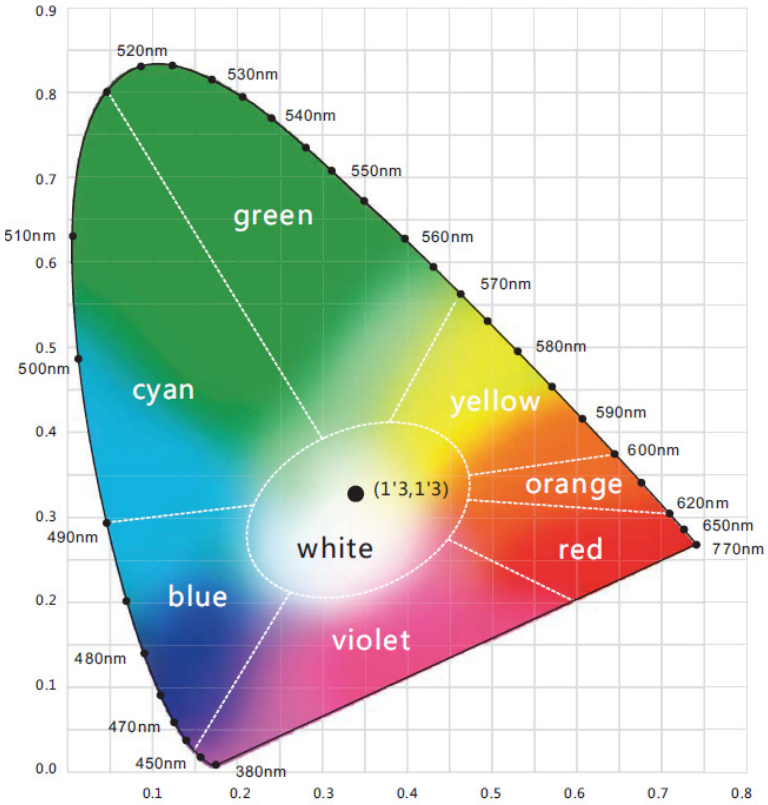

Light Color

Red
618-624nm

Green
522-528nm

Blue
468-474nm

Packaging

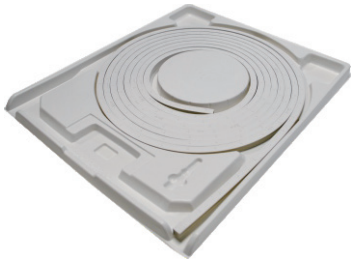



White Box





Packing Box

Fixture Length	White Box Dimensions	Packing Box Dimensions	# Of White Boxes	Package Weight
393.7in (10m)	13.78x1.65x18.11in (35x4.2x46cm)	18.9x14.57x9.54in (48x37x24cm)	5	15.43lbs (7kg)
787.4in (20m)	20.08x1.65x22.05in (45x4.2x56cm)	22.83x18.5x9.45in (58x47x24cm)	5	26.45lbs (12kg)
1181.1in (30m)	26.77x1.65x28.34in (61x4.2x72cm)	29.13x25x4.13in (74x63.5x10.5cm)	2	17.64lbs (8kg)