PART NO. ENMDED-1-5

HITACHI

Reliable solutions

Operator's Manual

ZAXIS
75US-5A
85USB-5A
Hydraulic Excavator

ZX75US-5A • 85USB-5A HYDRAULIC EXCAVATOR OPERATOR'S MANUAL

Hitachi Construction Machinery Co., Ltd.
URL:http://www.hitachi-c-m.com

PRINTED IN JAPAN (E) 2018, 06

ENMDED-1-5

Serial No.
ZX75US-5A 080001 and up
ZX85USB-5A 100001 and up

INTRODUCTION

Read this manual carefully to learn how to operate and service your machine correctly. Failure to do so could result in personal injury or machine damage.

This standard specification machine can be operated under the following conditions without being modified.
Atmospheric Temperature: –20 °C to 40 °C (–4 °F to 104 °F)
Altitude: 0 m to 1500 m (0 ft to 4900 ft)

In case the machine is used under conditions other than described above, consult your nearest Hitachi dealer.

This manual should be considered a permanent part of your machine and should remain with the machine when you sell it.

This machine is of metric design. Measurements in this manual are metric. Use only metric hardware and tools as specified.

Right-hand and left-hand sides are determined by facing in the direction of forward travel.

Write product identification numbers in the Machine Numbers section. Accurately record all the numbers to help in tracing the machine should it be stolen. Your dealer also needs these numbers when you order parts. If this manual is kept on the machine, also file the identification numbers in a secure place off the machine.

Be sure to use fuel that complies with JIS K-2204, EN-590 or ASTM D-975 which contains 15 ppm or lower sulfur. Also use fuel that complies with solid contamination level of class 18/16/13 of ISO4406-1999 (solid contamination includes dust). If the fuel specified above is not used, exhaust gas that exceeds the regulation values may be discharged, causing serious problem on the engine. Consult your nearest Hitachi dealer.

Warranty is provided as a part of Hitachi's support program for customers who operate and maintain their equipment as described in this manual. The warranty is explained on the warranty certificate which you should have received from your dealer.

This warranty provides you the assurance that Hitachi will back its products where defects appear within the warranty period. In some circumstances, Hitachi also provides field improvements, often without charge to the customer, even if the product is out of warranty.
Should the equipment be abused, or modified to change its performance beyond the original factory specifications, the warranty will become void and field improvements may be denied.
Setting fuel delivery above specifications or otherwise overpowering machines will result in such action.

Only qualified, experienced operators officially licensed (according to local law) should be allowed to operate the machine. Moreover, only officially licensed personnel should be allowed to inspect and service the machine.

PRIOR TO OPERATING THIS MACHINE, INCLUDING COMMUNICATION SYSTEM, IN A COUNTRY OTHER THAN A COUNTRY OF ITS INTENDED USE, IT MAY BE NECESSARY TO MAKE MODIFICATIONS TO IT SO THAT IT COMPLIES WITH THE LOCAL REGULATORY STANDARDS (INCLUDING SAFETY STANDARDS) AND LEGAL REQUIREMENTS OF THAT PARTICULAR COUNTRY. PLEASE DO NOT EXPORT OR OPERATE THIS MACHINE OUTSIDE OF THE COUNTRY OF ITS INTENDED USE UNTIL SUCH COMPLIANCE HAS BEEN CONFIRMED. PLEASE CONTACT HITACHI CONSTRUCTION MACHINERY CO., LTD. OR ANY OF OUR AUTHORIZED DISTRIBUTOR OR DEALER IF YOU HAVE ANY QUESTIONS CONCERNING COMPLIANCE.

CALIFORNIA

Proposition 65 Warning

Diesel engine exhaust and some of its constituents are known to the State of California to cause cancer, birth defects, and other reproductive harm.

All information, illustrations and specifications in this manual are based on the latest product information available at the time of publication. The right is reserved to make changes at any time without notice.

©2018 Hitachi Construction Machinery Co., Ltd.
All rights reserved.

INDEX

MACHINE NUMBERS
SAFETY
SAFETY SIGNS
COMPONENTS NAME
GETTING ON/OFF THE MACHINE
OPERATOR'S STATION
BREAK-IN
OPERATING THE ENGINE
DRIVING THE MACHINE
OPERATING THE MACHINE
TRANSPORTING
MAINTENANCE
MAINTENANCE UNDER SPECIAL ENVIRONMENTAL CONDITIONS
STORAGE
TROUBLESHOOTING
SPECIFICATIONS
OTHER ATTACHMENTS AND DEVICES
INDEX

CONTENTS

MACHINE NUMBERS 1

SAFETY S-1

Recognize Safety Information S-1
Understand Signal Words S-1
Follow Safety Instructions S-2
Prepare for Emergencies S-3
Wear Protective Clothing S-3
Protect Against Noise S-4
Inspect Machine S-4
General Precautions for Cab S-5
Use Handholds and Steps S-6
Adjust the Operator's Seat S-6
Ensure Safety Before Rising from or Leaving Operator's Seat S-7
Fasten Your Seat Belt S-7
Move and Operate Machine Safely S-8
Operate Only from Operator's Seat S-8
Jump Starting S-9
Keep Riders off Machine S-9
Precautions for Operations S-10
Investigate Job Site Beforehand S-11
Install OPG Guard S-12
Restriction of Attachment Installation S-13
Provide Signals for Jobs Involving Multiple Machines S-13
Confirm Direction of Machine to Be Driven S-13
Drive Machine Safely S-14
Avoid Injury from Rollaway Accidents S-16
Avoid Injury from Back-Over and Swing Accidents S-17
Keep Person Clear from Working Area S-18
Never Position Bucket Over Anyone S-18
Avoid Undercutting S-19
Avoid Tipping S-19
Never Undercut a High Bank S-20
Dig with Caution S-20
Operate with Caution S-20
Avoid Power Lines S-21
Precautions for Lightning S-21
Object Handling S-22
Protect Against Flying Debris S-22
Park Machine Safely S-23
Handle Fluids Safely–Avoid Fires S-23
Transport Safely S-24
Practice Safe Maintenance S-25
Warn Others of Service Work S-26
Support Machine Properly S-26
Stay Clear of Moving Parts S-27
Prevent Parts from Flying S-27
Store Attachments Safely S-28
Prevent Burns S-28
Replace Rubber Hoses Periodically S-29
Avoid High-Pressure Fluids S-29
Prevent Fires S-30
Evacuating in Case of Fire S-32
Beware of Exhaust Fumes S-32
Precautions for Welding and Grinding S-33
Avoid Heating Near Pressurized Fluid Lines S-34
Avoid Applying Heat to Lines Containing Flammable Fluids S-34
Precautions for Handling Accumulator and Gas Damper S-34
Remove Paint Before Welding or Heating S-35
Beware of Asbestos and Silicon Dust and Other Contamination S-35
Prevent Battery Explosions S-36
Service Air Conditioning System Safely S-36
Handle Chemical Products Safely S-37
Dispose of Waste Properly S-37
Never Ride Attachment S-38
Precautions for Communication Terminal S-38
Precaution for Communication Terminal Equipment S-39
Notes on Protection of Operator's Station When the Machine Rolls Over S-41

SAFETY SIGNS S-42

COMPONENTS NAME 1-1

Components Name 1-1

GETTING ON/OFF THE MACHINE 1-2

OPERATOR'S STATION 1-3

Cab Features 1-3
ZX75US-5A 1-3
ZX85USB-5A 1-4
Multi Function Monitor 1-5
Default Setting 1-6
Basic Screen 1-7
How to Use Screens 1-8
Displaying Basic Screen 1-8
Hour Meter 1-11
Clock 1-11
Fuel Gauge 1-11
Coolant Temperature Gauge 1-12
Operating Status Icon Display 1-12
Security Functions (Optional) 1-13
Input Password 1-13
Extending Password Duration Time 1-14
Alarm Occurrence Screen 1-15
Remedy 1-17
Main Menu 1-20
Air Conditioner 1-21
Circulation Air Mode 1-21
Air Conditioner ON/OFF 1-21
Radio 1-22
Mail (Optional) 1-23
Setting Menu 1-25
Date and Time 1-26
Time Adjustment 1-26
Date Adjustment 1-28
Display Mode Setting 1-30
Auto Shut-Down 1-32
Auto Shut-Down: ON/OFF 1-32
Acting Time Setting 1-33
Password Change (Optional) 1-34

CONTENTS

Rear View Camera Monitor 1-38
Rear View Camera ON/OFF 1-38
Brightness Adjustment 1-40
Language Settings 1-42
Lists of Display Language 1-44
Unit Selection 1-45
Display Item Selection (Rear View Camera OFF) 1-47
Main Menu Sequence Change 1-49
Information Menu 1-51
Operation 1-52
Machine Operation Hours 1-52
Attachment Operation (Optional) 1-54
Travel Operation 1-56
Actual operation 1-58
Maintenance 1-60
Time Remains and Maintenance Interval 1-62
Monitoring 1-64
Switch Panel 1-66
Return to Previous Screen (Monitor) 1-67
Return to Basic Screen (Monitor) 1-67
Select/Confirm Switch (Monitor) 1-67
Temperature Control Switch/Mode Switch (Air Conditioner) 1-67
AUTO/OFF Switch/Fan Switch (Air Conditioner) 1-67
AM/FM Selector/Tuning Switch (Radio) 1-68
Power Switch/Volume Control Knob (Radio) 1-68
Engine Control Dial 1-68
Auto-Idle Switch 1-69
Travel Mode Switch 1-69
Power Mode Switch 1-70
Work Light Switch 1-70
Wiper/Washer Switch 1-71
Overhead Window Wiper and Washer Switch (ZX75US-5A) (Optional) 1-72
Numeric Keypad 1-72
Switch Panel (for Optional Equipment) 1-73
Travel Alarm Deactivation Switch (Optional) 1-74
Swing Alarm Deactivation Switch (Optional) 1-74
Rear Light Switch (Optional) 1-74
Overload Alarm Switch (Optional) 1-74
Seat Heater Switch 1-75
Revolving Light Switch (Optional) 1-75
Electrical Control Main Switch (Optional) 1-75
Key Switch 1-76
Horn Switch 1-76
Electrical Control Switch (Optional) 1-77
Cigar Lighter 1-79
Using Cigar Lighter 1-79
Using Cigar Lighter Port as External Power Source 1-79
Cab Light Switch 1-80
Installing Fire Extinguisher (Optional) 1-81
Pilot Control Shut-Off Lever 1-82
Engine Stop Switch 1-83
Fuse Box 1-84
Fuse Box A 1-84
Fuse Box B 1-84
Fuse Box C 1-84
Auto Air Conditioner 1-85
Features 1-85
Components Name 1-86
Controller Part Name and Function 1-87
Cab Heater Operation 1-89
Cooling Operation 1-90
Defroster Operation 1-91
Cool Head/Warm Foot Operation 1-91
Tips for Optimal Air Conditioner Usage 1-92
For Rapid Cooling 1-92
When Windows Become Clouded 1-92
Off-Season Air Conditioner Maintenance 1-92
AM/FM Radio Operation 1-93
Controls on the Radio 1-93
Tuning Procedure 1-93
Station Presetting Procedure 1-94
Station Auto-Presetting Procedure 1-95
TONE Control 1-96
Audio Input (Optional) 1-97
Cab Door Release Lever 1-98
Opening/Closing and Removing Cab Inside Window 1-99
Opening Upper Front Window 1-100
Removing and Storing Lower Front Window 1-102
Opening Side Windows 1-103
Opening/Closing Overhead Window (Std. Model) 1-104
Opening/Closing Overhead Window (Clear Hatch: If Equipped) 1-105
Emergency Exit 1-106
Adjusting Operator's Seat 1-108
Seat Height and Angle Adjustment 1-108
Console and Seat Fore-aft Adjustment (ZX75US-5A) 1-108
Seat Fore-Aft Adjustment 1-108
Suspension Adjustment 1-108
Backrest Adjustment 1-109
Armrest Adjustment (ZX75US-5A) 1-109
Adjusting Operator's Seat (Optional) 1-110
Adjusting Seat Height 1-110
Console and Seat Fore-aft Adjustment (ZX75US-5A) 1-110
Seat Fore-Aft Adjustment 1-110
Suspension Adjustment 1-111
Fore-Aft Position Adjustment of Seat Surface 1-111
Angle Adjustment of Seat Surface 1-111
Backrest Adjustment 1-111
Armrest Adjustment 1-111
Console Height Adjustment 1-112
Adjusting Procedures 1-112
Installation and Adjustment of Mirrors 1-113
Seat Belt 1-114

BREAK-IN 2-1
Breaking in New Machine 2-1

OPERATING THE ENGINE 3-1
Inspect Machine Daily Before Starting 3-1

CONTENTS

Before Starting Engine 3-2
Starting the Engine 3-3
Check Instruments After Starting Engine 3-7
Using Booster Batteries 3-8
Stopping the Engine 3-10
Engine Auto-Stop in Extremely Low Temperature 3-11

DRIVING THE MACHINE 4-1
Travel Levers and Pedals 4-1
Travel Mode Switch 4-3
Travel Alarm (Optional) 4-4
Traveling 4-5
Traveling on Soft Ground 4-6
Raise One Track Using Boom and Arm 4-7
Towing Machine 4-8
Operating in Water or Mud 4-9
Precautions for Traveling on Slopes 4-10
Parking the Machine on Slopes 4-11
Parking the Machine 4-11

OPERATING THE MACHINE 5-1
Control Lever (ISO Pattern) 5-1
Pilot Control Shut-Off Lever 5-2
Blade Lever 5-3
Warming Up Operation 5-4
Engine Speed Control 5-5
Auto-Idle 5-6
Auto Shut-Down 5-8
Power Mode 5-11
Operating Backhoe 5-12
Shovel 5-13
Grading Operation 5-14
Avoid Driving Bucket Teeth into Ground 5-15
Avoid Hammer Work 5-15
Avoid Abusive Operation 5-16
Avoid Side Load the Bucket 5-16
Avoid Hitting Blade with Front-End Attachment 5-17
Do Not Use Wide Track Shoes on Rough Ground. 5-18
Shackle Hole Usage 5-19
Lifting 5-20
Pilot Accumulator Functions 5-21
Emergency Boom Lowering Procedure 5-22
Precautions for After Operations 5-25

TRANSPORTING 6-1
Transporting by Road 6-1
Loading/Unloading on a Trailer 6-2
Fastening Machine for Transporting 6-5
Unloading 6-6
Lifting Machine 6-7

MAINTENANCE 7-1
Correct Maintenance and Inspection Procedures 7-1
Check the Hour Meter Regularly 7-3
Layout 7-4
Maintenance Guide Table 7-5
Preparations for Inspection and Maintenance 7-7
Hood and Access Covers 7-8
Maintenance Guide 7-9
Periodic Replacement of Parts 7-13
Kind of Oils 7-14
A. Greasing 7-17
Front Joint Pins 7-17
Swing Bearing 7-19
Swing Internal Gear 7-20
Blade Joint Pins 7-21
B. Engine 7-22
Engine Oil Level 7-22
Change Engine Oil 7-24
Replace Engine Oil Filter 7-24
C. Transmission 7-26
Travel Reduction Gear 7-26
D. Hydraulic System 7-28
Inspection and Maintenance of Hydraulic Equipment 7-28
Change Hydraulic Oil and Replace Full-Flow Filter Element 7-30
Check Hydraulic Oil Level 7-32
Drain Hydraulic Tank Sump 7-33
Change Hydraulic Oil 7-34
Suction Filter Cleaning 7-34
Air Bleeding Procedures 7-36
Replacement of Full-Flow Filter 7-37
Replace Pilot Oil Filter 7-38
Replace Swing Drain Filter 7-39
Replace Air Breather Element 7-40
Check Hoses and Lines 7-41
E. Fuel System 7-45
Recommended Fuel 7-45
Refueling 7-46
Drain Fuel Tank Sump 7-47
Check Water Separator 7-48
Replace Fuel Main Filter Element 7-50
Replace Fuel Pre-Filter Element 7-51
Check Fuel Hoses 7-52
F. Air Cleaner 7-53
Clean Air Cleaner Outer Element 7-53
Replace Air Cleaner Outer and Inner Elements 7-53
G. Cooling System 7-55
Precautions for handling antifreeze 7-55
Check Coolant Level 7-56
Check and Adjust Fan Belt Tension 7-57
Change Coolant 7-58
Clean Radiator/Oil Cooler/Core 7-59
Clean Oil Cooler and Radiator and Front Screen 7-59
Clean Air Conditioner Condenser 7-59
H. Electrical System 7-60
Batteries 7-60
Electrolyte Level Check 7-62
Check Electrolyte Specific Gravity 7-63
Replace Batteries 7-64
Replacing Fuses 7-65
I. Miscellaneous 7-67
Check and Replace Bucket Teeth 7-67
Change Bucket 7-69

CONTENTS

Convert Bucket Connection Into Face Shovel 7-70
Adjust Bucket Linkage 7-71
Remove Travel Levers 7-72
Check and Replace Seat Belt 7-72
Check Windshield Fluid Level 7-73
Check Track Sag 7-74
Clean and Replace Air Conditioner Filter 7-77
Check Air Conditioner 7-80
Clean Cab Floor 7-82
Check/Clean/Function Check Injection Nozzle 7-83
Retighten Cylinder Head Bolt 7-83
Inspect and Adjust Valve Clearance 7-83
Check Fuel Injection Timing 7-83
Measure Engine Compression Pressure 7-83
Check Starter and Alternator 7-83
Check Crankcase Breather 7-83
Check Gas Damper 7-84
Tightening and Retightening Torque of Nuts and Bolts 7-84

MAINTENANCE UNDER SPECIAL ENVIRONMENTAL CONDITIONS 9-1
Maintenance Under Special Environmental Conditions ... 9-1

STORAGE 10-1
Storing the Machine 10-1

TROUBLESHOOTING 11-1
Troubleshooting 11-1

SPECIFICATIONS 12-1
Specifications ZX75US-5A 12-1
Working Ranges ZX75US-5A 12-2
Shoe Types and Applications ZX75US-5A 12-3
Specifications ZX85USB-5A 12-4
Working Ranges ZX85USB-5A 12-5
Shoe Types and Applications ZX85USB-5A 12-6

OTHER ATTACHMENTS AND DEVICES 13-1
Hydraulic Breaker, Hydraulic Crusher and Quick Coupler 13-1
Pipings for Breaker and Crusher 13-2
Secondary Relief Pressure Adjustment 13-3
Attachment Pedal (Hydraulic Breaker) (Optional) 13-4
Precautions for Breaker Operation 13-5
Change Hydraulic Oil and Replace Full-Flow Filter Element 13-9
Attachment Pedal (Hydraulic Crusher) Std. Model (Optional) 13-10
Precautions for Crusher Operation 13-11
Attachment 13-14
Attachment Connection Parts 13-16
Precaution for Arm Roll-In/Bucket Roll-In Combined Operation 13-17
Precaution for Arm Roll-In/Bucket Roll-In Combined Operation 13-17
Control Lever (HITACHI) 13-18
Specifications ZX75US-5A (with Blade) 13-19
Working Ranges ZX75US-5A (with Blade) 13-20
Shoe Types and Applications ZX75US-5A (with Blade) 13-21
Offset Arm Front 13-22
ZX75US-5A 13-22
Offset Control Pedal 13-22
Offset Operation 13-22
Offset Direction and Working Range 13-23
Precautions for Operating With the Offset Function 13-24
Maintenance (Offset Arm Front) 13-25
Specifications ZX75US-5A (with Offset Arm Front) 13-26
Working Ranges ZX75US-5A (with Offset Arm Front) ... 13-27
Shoe Types and Applications ZX75US-5A (with Offset Arm Front) 13-28

INDEX 14-1

MACHINE NUMBERS

The manufacturing Nos. explained in this group is the individual number (serial No.) given to each machine and hydraulic components. These numbers are requested when inquiring any information on the machine and/or components. Fill these serial Nos. in the blank spaces in this group to immediately make them available upon request.

Machine

TYPE : _____

PRODUCT IDENTIFICATION NUMBER : _____

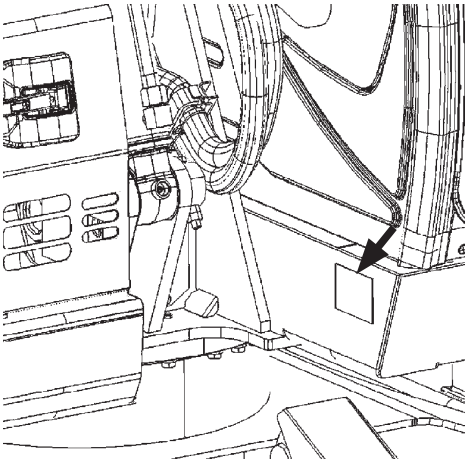

MDEC-00-003

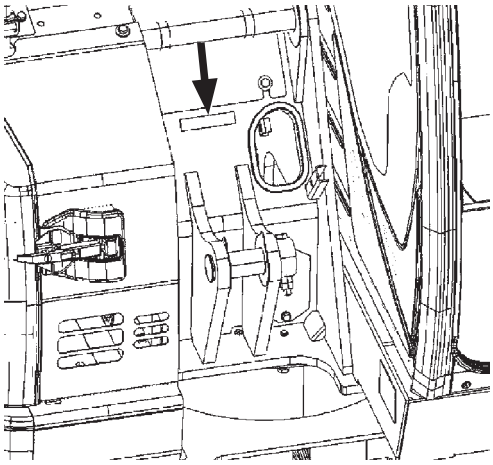

MDEC-00-004

Product Identification Number

NOTE:

HCMDED50000030001

Marks to indicate the start and end of the PIN

PRODUCT IDENTIFICATION NUMBER (PIN)

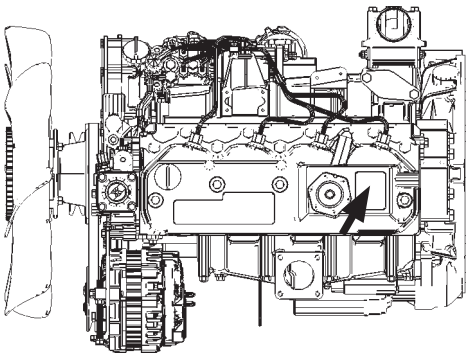

MDED-00-001

Engine

TYPE : _____

MFG. NO. : _____

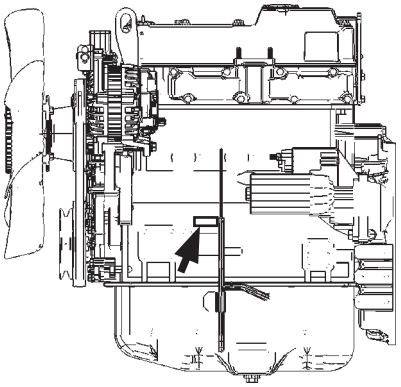

MDED-00-002

Travel Motor

TYPE : _____

MFG. NO. : _____

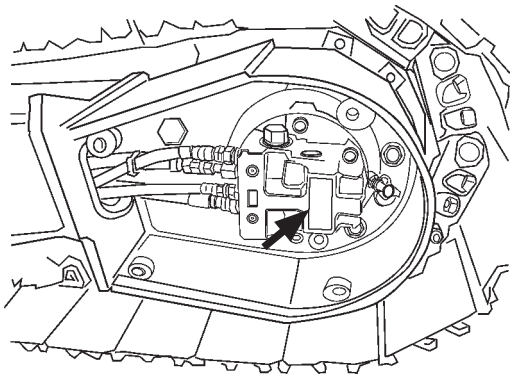

M1CD-01-005

Swing Motor

TYPE : _____

MFG. NO. : _____

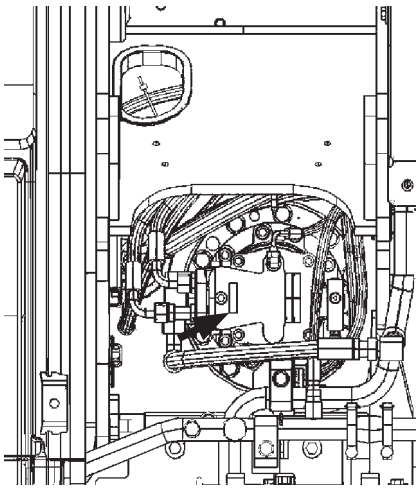

MDEC-00-005

Hydraulic Pump

MFG. NO. : _____

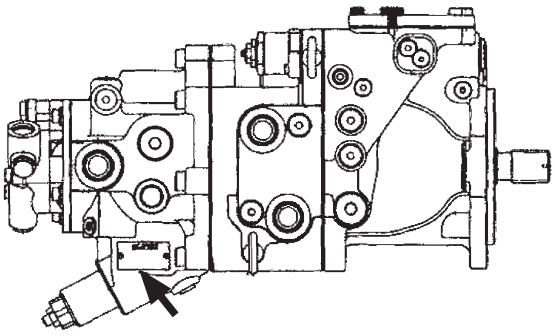

M1P1-01-002

Recognize Safety Information

- These are the SAFETY ALERT SYMBOLS.
  - When you see these symbols on your machine or in this manual, be alert to the potential for personal injury.
  - Follow recommended precautions and safe operating practices.



SA-688

Understand Signal Words

- On machine safety signs, signal words designating the degree or level of hazard - DANGER, WARNING, or CAUTION - are used with the safety alert symbol.
  - **DANGER** indicates an imminently hazardous situation which, if not avoided, will result in death or serious injury.
  - **WARNING** indicates a potentially hazardous situation which, if not avoided, could result in death or serious injury.
  - **CAUTION** indicates a potentially hazardous situation which, if not avoided, may result in minor or moderate injury.
  - **DANGER or WARNING safety signs** are located near specific hazards. General precautions are listed on **CAUTION safety signs.**
  - Some safety signs do not use any of the designated signal words above after the safety alert symbol are occasionally used on this machine.



SA-1223

- To avoid confusing machine protection with personal safety messages, a signal word **IMPORTANT** indicates a situation which, if not avoided, could result in damage to the machine.
- ***NOTE***: indicates an additional explanation for an element of information.

Follow Safety Instructions

- Carefully read and follow all safety signs on the machine and all safety messages in this manual.
- Safety signs should be installed, maintained and replaced when necessary.
  - If a safety sign or this manual is damaged or missing, order a replacement from your authorized dealer in the same way you order other replacement parts (be sure to state machine model and serial number when ordering).
- Learn how to operate the machine and its controls correctly and safely.
- Allow only trained, qualified, authorized personnel to operate the machine.
- Keep your machine in proper working condition.
  - Unauthorized modifications of the machine may impair its function and/or safety and affect machine life.
  - Do not modify any machine parts without authorization. Failure to do so may deteriorate the part safety, function, and/or service life. In addition, personal accident, machine trouble, and/or damage to material caused by unauthorized modifications will void Hitachi Warranty Policy.
  - Do not use attachments and/or optional parts or equipment not authorized by Hitachi. Failure to do so may deteriorate the safety, function, and/or service life of the machine. In addition, personal accident, machine trouble, and/or damage to material caused by using unauthorized attachments and/or optional parts or equipment will void Hitachi Warranty Policy.
- The safety messages in this SAFETY chapter are intended to illustrate basic safety procedures of machines. However it is impossible for these safety messages to cover every hazardous situation you may encounter. If you have any questions, you should first consult your supervisor and/or your authorized dealer before operating or performing maintenance work on the machine.

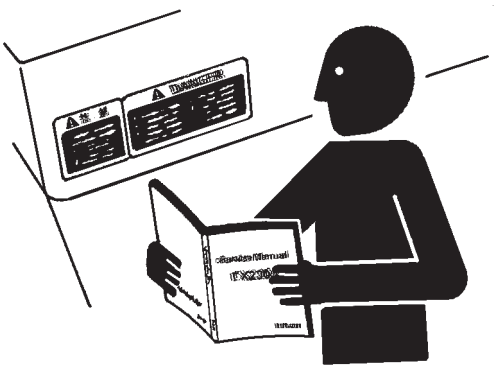

SA-003

Prepare for Emergencies

- Be prepared if a fire starts or if an accident occurs.
  - Keep a first aid kit and fire extinguisher on hand.
  - Thoroughly read and understand the label attached on the fire extinguisher to use it properly.
  - To ensure that a fire extinguisher can be always used when necessary, check and service the fire extinguisher at the recommended intervals as specified in the fire extinguisher manual.
  - Establish emergency procedure guidelines to cope with fires and accidents.
  - Keep emergency numbers for doctors, ambulance service, hospital, and fire department posted near your telephone.



SA-437

Wear Protective Clothing

- Wear close fitting clothing and safety equipment appropriate to the job.

  You may need:
  - A hard hat
  - Safety shoes
  - Safety glasses, goggles, or face shield
  - Heavy gloves
  - Hearing protection
  - Reflective clothing
  - Wet weather gear
  - Respirator or filter mask.

  Be sure to wear the correct equipment and clothing for the job. Do not take any chances.
  - Avoid wearing loose clothing, jewelry, or other items that can catch on control levers or other parts of the machine.
- Operating equipment safely requires the full attention of the operator. Do not wear radio or music headphones while operating the machine.

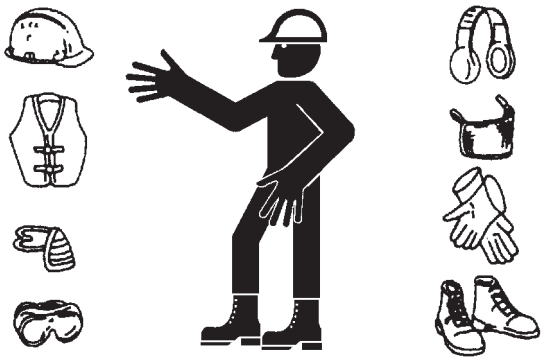

SA-438

Protect Against Noise

- Prolonged exposure to loud noise can cause impairment or loss of hearing.
  - Wear a suitable hearing protective device such as earmuffs or earplugs to protect against objectionable or uncomfortably loud noises.



SA-434

Inspect Machine

- Inspect your machine carefully each day or shift by walking around it before you start it to avoid personal injury.
  - In the walk-around inspection be sure to cover all points described in the "Inspect Machine Daily Before Starting" section in the operator's manual.



SA-435

General Precautions for Cab

- Before entering the cab, thoroughly remove all dirt and/or oil such as mud, grease, soil or stones that may mess up the cab from the soles of your work boots. If any controls such as a pedal is operated while with dirt and/or oil on the soles of the operator's work boots, the operator's foot may slip off the pedal, possibly resulting in a personal accident.
- Do not mess up around the operator's seat with parts, tools, soil, stones, obstacles that may fold up or turn over, cans or lunch box. The levers or pedals become inoperable if obstacle jams in operation stroke of the travel levers/pedals, pilot control shut-off lever or control levers, which may result in serious injury or death.
- Avoid storing transparent bottles in the cab. Do not attach any transparent type window decorations on the windowpanes as they may focus sunlight, possibly starting a fire.
- Refrain from listening to the radio, or using music headphones or mobile telephones in the cab while operating the machine.
- Keep all flammable objects and/or explosives away from the machine.
- After using the ashtray, always cover it to extinguish the match and/or tobacco.
- Do not leave cigarette lighters in the cab. When the temperature in the cab increases, the lighter may explode.
- Use proper floor mat dedicated to the machine. If another floor mat is used, it may be displaced and contact with the travel pedals during operation, resulting in serious injury or death.

Use Handholds and Steps

- Falling is one of the major causes of personal injury.
  - When you get on and off the machine, always face the machine and maintain a three-point contact with the steps and handrails.
  - Do not use any controls as hand-holds.
  - Never jump on or off the machine. Never mount or dismount a moving machine.
  - Be careful of slippery conditions on platforms, steps, and handrails when leaving the machine.
  - Never get on and off the machine with tools in your hands.



SA-439

Adjust the Operator's Seat

- A poorly adjusted seat for either the operator or for the work at hand may quickly fatigue the operator leading to misoperations.
  - The seat should be adjusted whenever changing the operator for the machine.
  - The operator should be able to fully depress the pedals and to correctly operate the control levers with his back against the seat back.
  - If not, move the seat forward or backward, and check again.
  - Adjust the rear view mirror position so that the best rear visibility is obtained from the operator's seat. If the mirror is broken, immediately replace it with a new one.



SA-378

Ensure Safety Before Rising from or Leaving Operator's Seat

- Before rising from the operator's seat to open/close either side window or to adjust the seat position, be sure to first lower the front attachment to the ground and then move the pilot control shut-off lever to the LOCK position. Failure to do so may allow the machine to unexpectedly move when a body part unintentionally comes in contact with a control lever and/or pedal, possibly resulting in serious personal injury or death.
- Before leaving the machine, be sure to first lower the front attachment to the ground and then move the pilot control shut-off lever to the LOCK position. Turn the key switch OFF to stop the engine.
- Before leaving the machine, close all windows, doors, and access covers and lock them up.

Fasten Your Seat Belt

- If the machine should overturn, the operator may become injured and/or thrown from the cab. Additionally the operator may be crushed by the overturning machine, resulting in serious injury or death.
  - Prior to operating the machine, thoroughly examine webbing, buckle and attaching hardware. If any item is damaged or worn, replace the seat belt or component before operating the machine.
  - Be sure to remain seated with the seat belt securely fastened at all times when the machine is in operation to minimize the chance of injury from an accident.
  - We recommend that the seat belt be replaced every three years regardless of its apparent condition.



SA-237

Move and Operate Machine Safely

- Bystanders can be run over.
  - Take extra care not to run over bystanders. Confirm the location of bystanders before moving, swinging, or operating the machine.
  - Always keep the travel alarm and horn in working condition (if equipped). It warns people when the machine starts to move.
  - Use a signal person when moving, swinging, or operating the machine in congested areas. Coordinate hand signals before starting the machine.
  - Use appropriate illumination. Check that all lights are operable before operating the machine. If any faulty illumination is present, immediately repair it.
  - Ensure the cab door, windows, doors and covers are securely locked.
  - Check the mirrors and the monitor in the CAB for problems.
    If there is, replace the problem part(s) or clean the mirror, camera and the monitor.
    Refer to Rear View Monitor section on the cleaning of the camera and the monitor.



SA-426

Operate Only from Operator's Seat

- Inappropriate engine starting procedures may cause the machine to runaway, possibly resulting in serious injury or death.
  - Start the engine only when seated in the operator's seat.
  - NEVER start the engine while standing on the track or on ground.
  - Do not start engine by shorting across starter terminals.
  - Before starting the engine, confirm that all control levers are in neutral.
  - Before starting the engine, confirm the safety around the machine and sound the horn to alert bystanders.



SA-444

Jump Starting

- Battery gas can explode, resulting in serious injury.
  - If the engine must be jump started, be sure to follow the instructions shown in the "OPERATING THE ENGINE" chapter in the operator's manual.
  - The operator must be in the operator's seat so that the machine will be under control when the engine starts. Jump starting is a two-person operation.
  - Never use a frozen battery.
  - Failure to follow correct jump starting procedures could result in a battery explosion or a runaway machine.



SA-032

Keep Riders off Machine

- Riders on machine are subject to injury such as being struck by foreign objects and being thrown off the machine.
  - Only the operator should be on the machine. Keep riders off.
  - Riders also obstruct the operator's view, resulting in the machine being operated in an unsafe manner.



SA-379

Precautions for Operations

- Investigate the work site before starting operations.
  - Be sure to wear close fitting clothing and safety equipment appropriate for the job, such as a hard hat, etc. when operating the machine.
  - Clear all persons and obstacles from area of operation and machine movement.
    Always beware of the surroundings while operating.
    When working in a small area surrounded by obstacles, take care not to hit the upperstructure against obstacles.
  - When loading onto trucks, bring the bucket over the truck beds from the rear side. Take care not to swing the bucket over the cab or over any person.

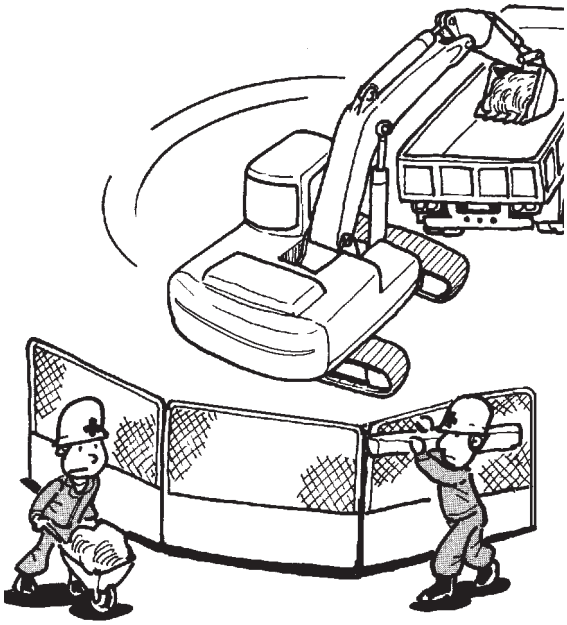

M178-05-007

Investigate Job Site Beforehand

- When working at the edge of an excavation or on a road shoulder, the machine could tip over, possibly resulting in serious injury or death.
  - Investigate the configuration and ground conditions of the job site beforehand to prevent the machine from falling and to prevent the ground, stockpiles or banks from collapsing.
  - Make a work plan. Use machines appropriate to the work and job site.
  - Reinforce ground, edges and road shoulders as necessary. Keep the machine well back from the edges of excavations and road shoulders.
  - When working on an incline or on a road shoulder, employ a signal person as required.
  - Confirm that your machine is equipped with a FOPS cab before working in areas where the possibility of falling stones or debris exist.
  - When the footing is weak, reinforce the ground before starting work.
  - When working on frozen ground, be extremely alert. As ambient temperatures rise, footing becomes loose and slippery.
  - Beware the possibility of fire when operating the machine near flammable objects such as dry grass.



SA-380

- Make sure the worksite has sufficient strength to firmly support the machine.
  When working close to an excavation or at road shoulders, operate the machine with the tracks positioned perpendicular to the cliff face with travel motors at the rear, so that the machine can more easily evacuate if the cliff face collapses.
- If working on the bottom of a cliff or a high bank is required, be sure to investigate the area first and confirm that no danger of the cliff or bank collapsing exists. If any possibility of cliff or bank collapsing exists, do not work on the area.
- Soft ground may collapse when operating the machine on it, possibly causing the machine to tip over. When working on soft ground is required, be sure to reinforce the ground first using large pieces of steel plates strong and firm enough to easily support the machine.
- Note that there is always a possibility of machine tipping over when working on rough terrain or on slopes. Prevent machine tipping over from occurring. When operating on rough terrain or on slopes:
  - Reduce the engine speed.
  - Select slow travel speed mode.
  - Operate the machine slowly and be cautious with machine movements.

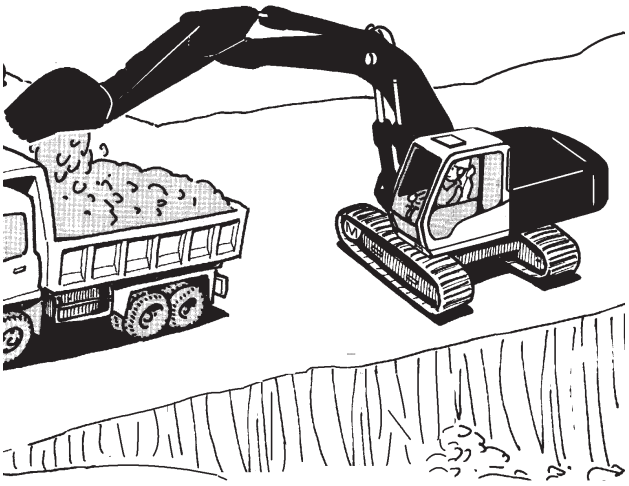

M104-05-016

Install OPG Guard

In case the machine is operated in areas where the possibilities of falling stones or debris exist, equip Hitachi OPG guard. Consult your authorized dealer for installing the OPG guard. The guard can be compliant with ROPS standards depending on the machine specifications.
In order not to impair operator protective structure:
Replace damaged ROPS or OPG guard. Never attempt to repair or modify the guard.

ROPS: Roll Over Protective Structure
OPG: Operator Protective Guard

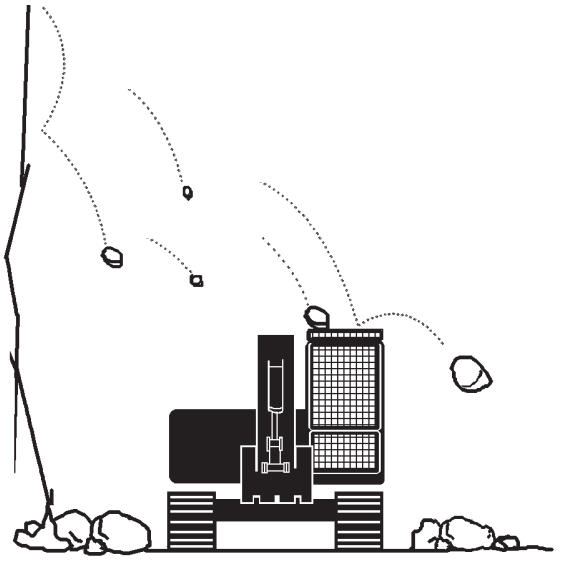

SA-490

Restriction of Attachment Installation

- Do not install an attachment which exceeds specified weight for the machine structure.

Provide Signals for Jobs Involving Multiple Machines

- For jobs involving multiple machines, provide signals commonly known by all personnel involved. Also, appoint a signal person to coordinate the job site. Make sure that all personnel obey the signal person's directions.



SA-481

Confirm Direction of Machine to Be Driven

- Incorrect travel pedal/lever operation may result in serious injury or death.
  - Before driving the machine, confirm the position of the undercarriage in relation to the operator's position. If the travel motors are located in front of the cab, the machine will move in reverse when travel pedals/levers are operated to the front.

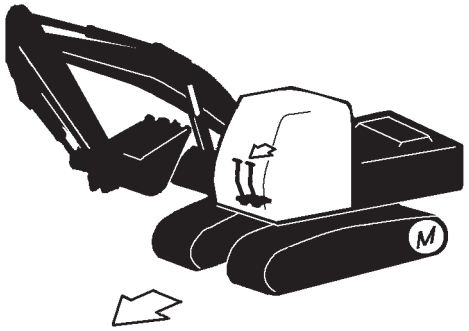

SA-491

Drive Machine Safely

- Before driving the machine, always confirm that the travel levers/pedals direction corresponds to the direction you wish to drive.
  - Be sure to detour around any obstructions.
  - Avoid traveling over obstructions. Soil, fragments of rocks, and/or metal pieces may scatter around the machine. Do not allow personnel to stay around the machine while traveling.

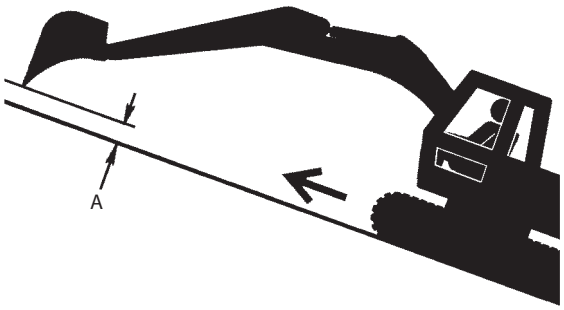

SA-657

- Driving on a slope may cause the machine to slip or overturn, possibly resulting in serious injury or death.
  - Never attempt to ascend or descend 35 degrees or steeper slopes.
  - Be sure to fasten the seat belt.
  - When driving up or down a slope, keep the bucket facing the direction of travel, approximately 0.2 to 0.3 m (A) above the ground.
  - If the machine starts to skid or becomes unstable, immediately lower the bucket to the ground and stop.
  - Driving across the face of a slope or steering on a slope may cause the machine to skid or turnover. If the direction must be changed, move the machine to level ground, then, change the direction to ensure safe operation.

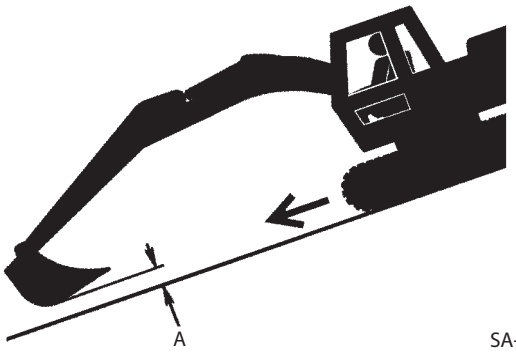

SA-658

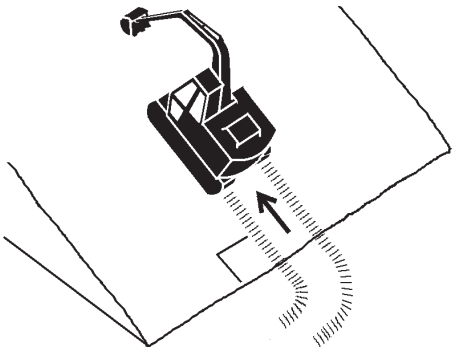

SA-441

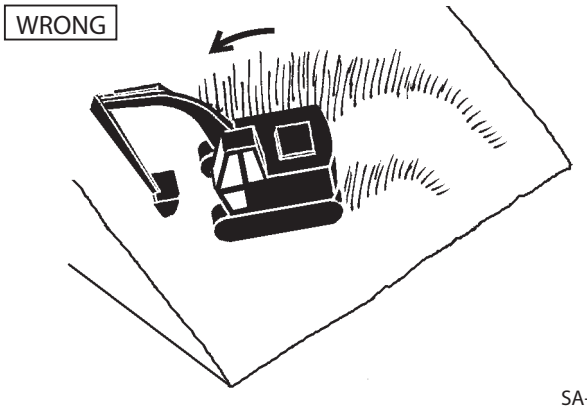

SA-590

- Avoid swinging the upperstructure on slopes. Never attempt to swing the upperstructure downhill. The machine may tip over. If swinging uphill is unavoidable, carefully operate the upperstructure and boom at slow speed.
- If the engine stalls on a slope, immediately lower the bucket to the ground. Return the control levers to neutral. Then, restart the engine.
- Be sure to thoroughly warm up the machine before ascending steep slopes. If hydraulic oil has not warmed up sufficiently, sufficient performance may not be obtained.
- Use a signal person when moving, swinging or operating the machine in congested areas. Coordinate hand signals before starting the machine.
- Before moving machine, determine which way to move travel pedals/levers for the direction you want to go. When the travel motors are in the rear, pushing down on the front of the travel pedals or pushing the levers forward moves the machine forward, towards the idlers. An arrow-mark seal is stuck on the inside surface of the side frame to indicate the machine front direction.
- Select a travel route that is as flat as possible. Steer the machine as straight as possible, making small gradual changes in direction.
- Before traveling on them, check the strengths of bridges and road shoulders, and reinforce if necessary.
- Use wood plates in order not to damage the road surface. Be careful of steering when operating on asphalt roads in summer.
- When crossing train tracks, use wood plates in order not to damage them.
- Do not make contact with electric wires or bridges.
- When crossing a river, measure the depth of the river using the bucket, and cross slowly. Do not cross the river when the depth of the river is deeper than the upper edge of the upper roller.
- When traveling on rough terrain, reduce engine speed. Select slow travel speed. Slower speed will reduce possible damage to the machine.
- Avoid operations that may damage the track and undercarriage components.
- During freezing weather, always clean snow and ice from track shoes before loading and unloading machine, to prevent the machine from slipping.



M104-05-008

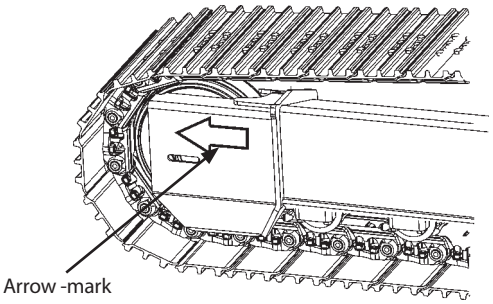

M178-03-001

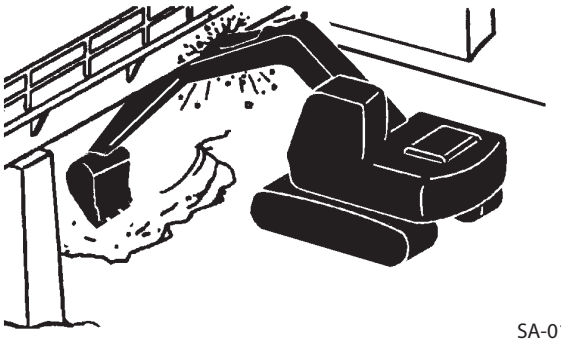

SA-011

Avoid Injury from Rollaway Accidents

- Death or serious injury may result if you attempt to mount or stop a moving machine.

To avoid rollaways:

- Select level ground when possible to park the machine.
- Do not park the machine on a grade.
- Lower the bucket and/or other work tools to the ground.
- Turn the auto-idle switch OFF.
- Run the engine at slow idle speed without load for 5 minutes to cool down the engine.
- Stop the engine and remove the key from the key switch.
- Pull the pilot control shut-off lever to LOCK position.
- Block both tracks and lower the bucket to the ground. Thrust the bucket teeth into the ground if you must park on a grade.
- Position the machine to prevent rolling.
- Park at a reasonable distance from other machines.

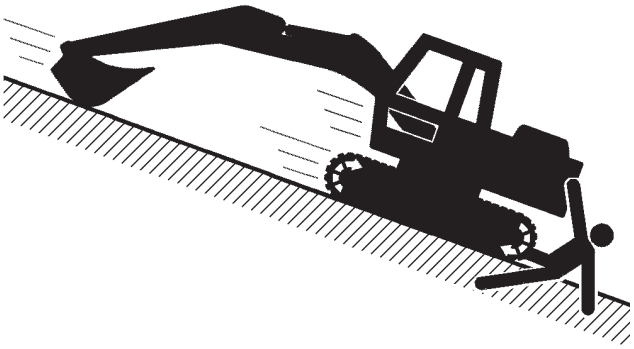

SA-391

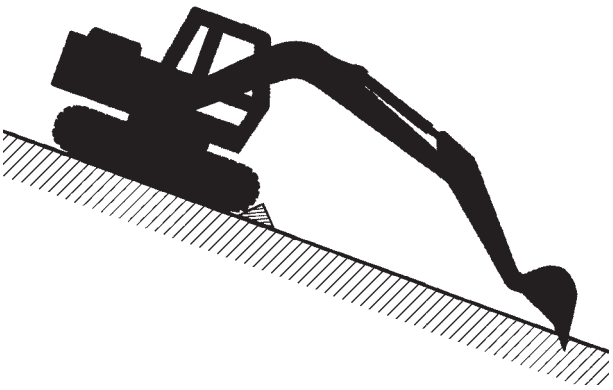

SA-2273

Avoid Injury from Back-Over and Swing Accidents

- If any person is present near the machine when backing or swinging the upperstructure, the machine may hit or run over that person, resulting in serious injury or death.
  To avoid back-over and swing accidents:
  - Always look around BEFORE YOU BACK UP AND SWING THE MACHINE. BE SURE THAT ALL BYSTANDERS ARE CLEAR.
  - Keep the travel alarm in working condition (if equipped). ALWAYS BE ALERT FOR BYSTANDERS MOVING INTO THE WORK AREA. USE THE HORN OR OTHER SIGNAL TO WARN BYSTANDERS BEFORE MOVING MACHINE.
  - USE A SIGNAL PERSON WHEN BACKING UP IF YOUR VIEW IS OBSTRUCTED. ALWAYS KEEP THE SIGNAL PERSON IN VIEW.
    Use hand signals, which conform to your local regulations, when work conditions require a signal person.
  - No machine motions shall be made unless signals are clearly understood by both signalman and operator.
  - Learn the meanings of all flags, signs, and markings used on the job and confirm who has the responsibility for signaling.
  - Keep windows, mirrors, and lights clean and in good condition.
  - Dust, heavy rain, fog, etc., can reduce visibility. As visibility decreases, reduce speed and use proper lighting.
  - Read and understand all operating instructions in the operator's manual.

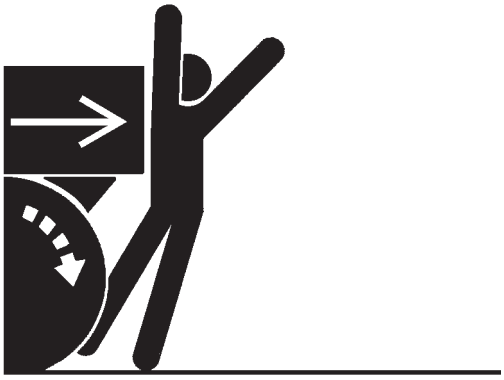

SA-383

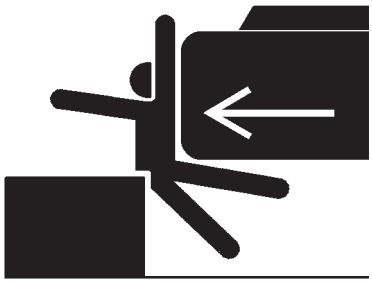

SA-384

Keep Person Clear from Working Area

- A person may be hit severely by the swinging front attachment or counterweight and/or may be crushed against an other object, resulting in serious injury or death.
  - Keep all persons clear from the area of operation and machine movement.
  - Before operating the machine, set up barriers to the sides and rear area of the bucket swing radius to prevent anyone from entering the work area.

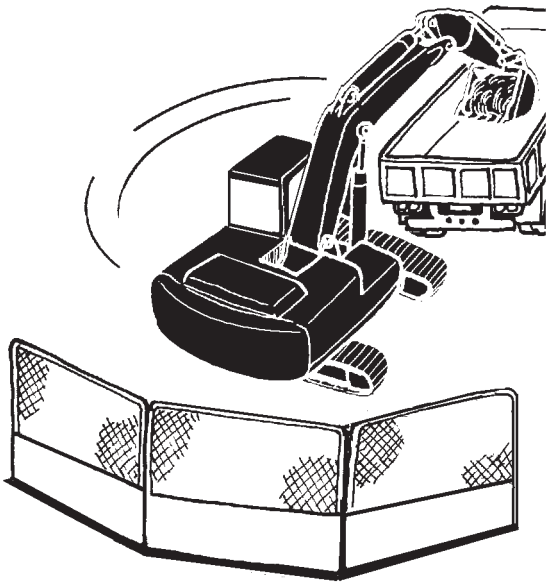

SA-386

Never Position Bucket Over Anyone

- Never lift, move, or swing bucket above anyone or a truck cab.
  Serious injury or machine damage may result due to bucket load spill or due to collision with the bucket.



SA-487

Avoid Undercutting

- In order to retreat from the edge of an excavation if the footing should collapse, always position the undercarriage perpendicular to the edge of the excavation with the travel motors at the rear.
  - If the footing starts to collapse and if retreat is not possible, do not panic. Often, the machine can be secured by lowering the front attachment, in such cases.

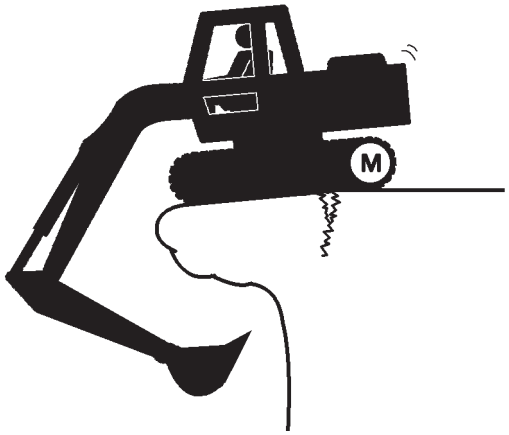

SA-488

Avoid Tipping

DO NOT ATTEMPT TO JUMP CLEAR OF TIPPING MACHINE --- SERIOUS OR FATAL CRUSHING INJURIES WILL RESULT

MACHINE WILL TIP OVER FASTER THAN YOU CAN JUMP FREE

FASTEN YOUR SEAT BELT

- The danger of tipping is always present when operating on a grade, possibly resulting in serious injury or death.
  To avoid tipping:
- Be extra careful before operating on a grade.
  - Prepare machine operating area flat.
  - Keep the bucket low to the ground and close to the machine.
  - Reduce operating speeds to avoid tipping or slipping.
  - Avoid changing direction when traveling on grades.
  - NEVER attempt to travel across a grade steeper than 15 degrees if crossing the grade is unavoidable.
  - Reduce swing speed as necessary when swinging loads.

- Be careful when working on frozen ground.
  - Temperature increases will cause the ground to become soft and make ground travel unstable.

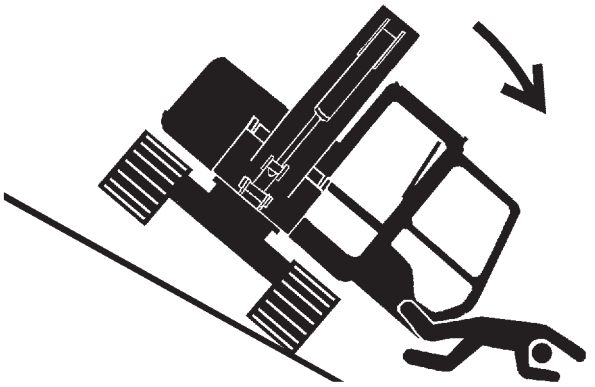

SA-012

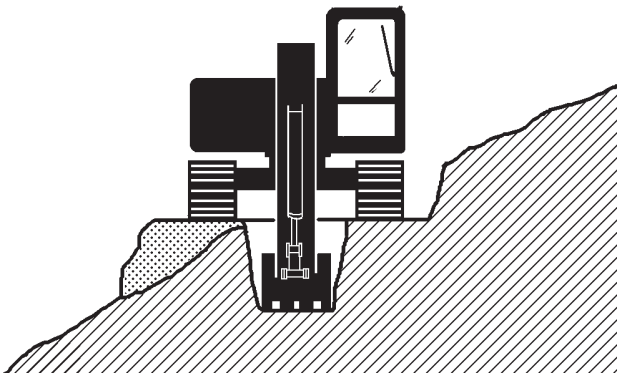

SA-440

Never Undercut a High Bank

- The edges could collapse or a land slide could occur causing serious injury or death.



SA-489

Dig with Caution

- Accidental severing of underground cables or gas lines may cause an explosion and/or fire, possibly resulting in serious injury or death.
  - Before digging check the location of cables, gas lines, and water lines.
  - Keep the minimum distance required, by law, from cables, gas lines, and water lines.
  - If a fiber optic cable should be accidentally severed, do not look into the end. Doing so may result in serious eye injury.
  - Contact your local "diggers hot line" if available in your area , and/or the utility companies directly. Have them mark all underground utilities.



SA-382

Operate with Caution

- If the front attachment or any other part of the machine hits against an overhead obstacle, such as a bridge, both the machine and the overhead obstacle will be damaged, and personal injury may result as well.
  - Take care to avoid hitting overhead obstacles with the boom or arm.



SA-389

Avoid Power Lines



SA-381

- Serious injury or death can result if the machine or front attachments are not kept a safe distance from electric lines.
  - When operating near an electric line, NEVER move any part of the machine or load closer than 3 m plus twice the line insulator length.
  - Check and comply with any local regulations that may apply.
  - Wet ground will expand the area that could cause any person on it to be affected by electric shock. Keep all bystanders or co-workers away from the site.

Precautions for Lightning





SA-2715

- Lightning may strike the machine.

  If lightning comes close, immediately stop the operation, and take the following action.

  - When you are around the machine or operating cab-less machine, evacuate to a safe place far away from the machine.
  - When you are in the cab, stay in the cab until lightning has passed and safety is secured. Close the cab doors and windows. Lower the bucket to the ground, and stop the engine. Put your hands on your lap to avoid contact with any metal surfaces. Never go out of the cab.

  If lightning strikes the machine or near the machine, check all of the machine safety devices for any failure after lightning has passed and safety is secured. If any trouble is found, operate the machine only after repairing it.

Object Handling

- If a lifted load should fall, any person nearby may be struck by the falling load or may be crushed underneath it, resulting in serious injury or death.
  - When using the machine for craning operations, be sure to comply with all local regulations.
  - Do not use damaged chains or frayed cables, sables, slings, or ropes.
  - Before craning, position the upperstructure with the travel motors at the rear.
  - Move the load slowly and carefully. Never move it suddenly.
  - Keep all persons well away from the load.
  - Never move a load over a person's head.
  - Do not allow anyone to approach the load until it is safely and securely situated on supporting blocks or on the ground.
  - Never attach a sling or chain to the bucket teeth. They may come off, causing the load to fall.

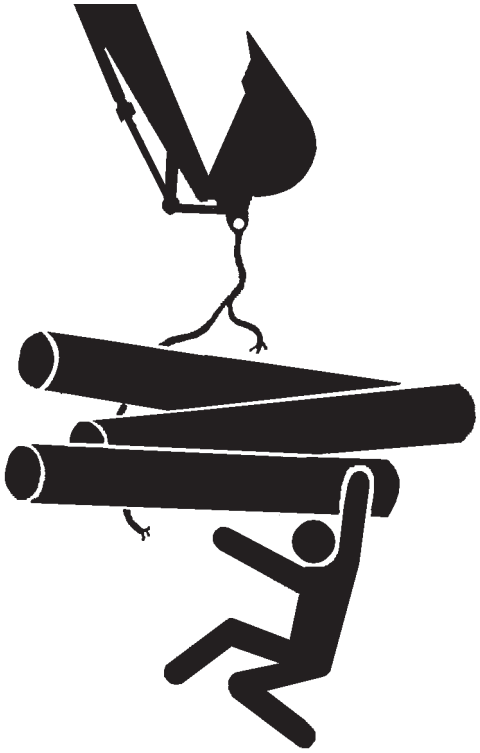

SA-014

Protect Against Flying Debris

- If flying debris hit eyes or any other part of the body, serious injury may result.
  - Guard against injury from flying pieces of metal or debris; wear goggles or safety glasses.
  - Keep bystanders away from the working area before striking any object.
  - Always close the front windows, doors, door windows and the overhead window when operating the machine.

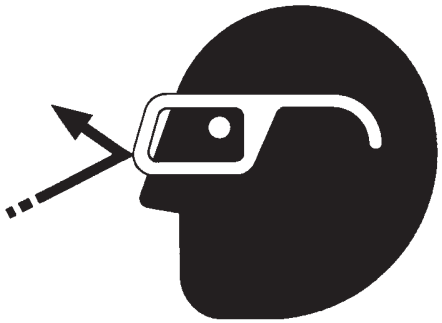

SA-432

Park Machine Safely

To avoid accidents:
- Park machine on a firm, level surface.
- Lower bucket to the ground.
- Turn auto-idle switch OFF.
- Run engine at slow idle speed without load for 5 minutes.
- Turn key switch to OFF to stop engine.
- Remove the key from the key switch.
- Pull the pilot control shut-off lever to the LOCK position.
- Close windows, roof vent, and cab door.
- Lock all access doors and compartments.



SA-390

Handle Fluids Safely–Avoid Fires

- Handle fuel with care; it is highly flammable. If fuel ignites, an explosion and/or a fire may occur, possibly resulting in serious injury or death.
  - Do not refuel the machine while smoking or when near open flame or sparks.
  - Always stop the engine before refueling the machine.
  - Fill the fuel tank outdoors.

- All fuels, most lubricants, and some coolants are flammable.
  - Store flammable fluids well away from fire hazards.
  - Do not incinerate or puncture pressurized containers.
  - Do not store oily rags; they can ignite and burn spontaneously.
  - Securely tighten the fuel and oil filler cap.



SA-018



SA-019

Transport Safely

- Take care the machine may turn over when loading or unloading the machine onto or off of a truck or trailer.
  - Observe the related regulations and rules for safe transportation.
  - Select an appropriate truck or trailer for the machine to be transported.
  - Be sure to use a signal person.
  - Always follow the following precautions for loading or unloading:

1. Select solid and level ground.
2. Always use a ramp or deck strong enough to support the machine weight.
3. Turn auto-idle switch OFF.
4. Always select the slow speed mode with the travel mode switch.
5. Never load or unload the machine onto or off a truck or trailer using the front attachment functions when driving up or down the ramp.
6. Never steer the machine while on the ramp. If the traveling direction must be changed while the ramp, unload the machine from the ramp, reposition the machine on the ground, then try loading again.
7. The top end of the ramp where it meets the flatbed is a sudden bump. Take care when traveling over it.
8. Place blocks in front of and behind the tires. Securely hold the machine to the truck or trailer deck with wire ropes.



SA-395

Be sure to further follow the details described in the TRANSPORTING section.

Practice Safe Maintenance

To avoid accidents:
- Understand service procedures before starting work.
- Keep the work area clean and dry.
- Do not spray water or steam inside cab.
- Never lubricate or service the machine while it is moving.
- Keep hands, feet and clothing away from power-driven parts.



SA-028

Before servicing the machine:
1. Park the machine on a level surface.
2. Lower the bucket to the ground.
3. Turn the auto-idle switch off.
4. Run the engine at slow idle speed without load for 5 minutes.
5. Turn the key switch to OFF to stop engine.
6. Relieve the pressure in the hydraulic system by moving the control levers several times.
7. Remove the key from the key switch.
8. Attach a "Do Not Operate" tag on the control lever.
9. Pull the pilot control shut-off lever to the LOCK position.
10. Allow the engine to cool.



SA-527

- If a maintenance procedure must be performed with the engine running, do not leave the machine unattended.
- If the machine must be raised, maintain a 90 to 110˚ angle between the boom and arm. Securely support any machine elements that must be raised for service work.
- Inspect certain parts periodically and repair or replace as necessary. Refer to the section discussing that part in the "MAINTENANCE" chapter of this manual.
- Keep all parts in good condition and properly installed.
- Fix damage immediately. Replace worn or broken parts. Remove any buildup of grease, oil, or debris.
- When cleaning parts, always use nonflammable detergent oil. Never use highly flammable oil such as fuel oil and gasoline to clean parts or surfaces.
- Disconnect battery ground cable (–) before making adjustments to electrical systems or before performing welding on the machine.

- Sufficiently illuminate the work site. Use a maintenance work light when working under or inside the machine.
- Always use a work light protected with a guard. In case the light bulb is broken, spilled fuel, oil, antifreeze fluid, or window washer fluid may catch fire.



SA-037

Warn Others of Service Work

- Unexpected machine movement can cause serious injury.
  - Before performing any work on the machine, attach a "Do Not Operate" tag on the control lever.
    This tag is available from your authorized dealer.



SS3076175

Support Machine Properly

- Never attempt to work on the machine without securing the machine first.
  - Always lower the attachment to the ground before you work on the machine.
  - If you must work on a lifted machine or attachment, securely support the machine or attachment. Do not support the machine on cinder blocks, hollow tires, or props that may crumble under continuous load. Do not work under a machine that is supported solely by a jack.



SA-527

Stay Clear of Moving Parts

- Entanglement in moving parts can cause serious injury.
  - To prevent accidents, care should be taken to ensure that hands, feet, clothing, jewelry and hair do not become entangled when working around rotating parts.

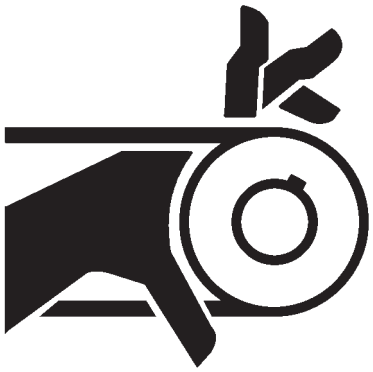

SA-026

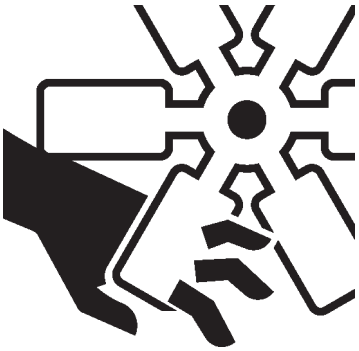

SA-2294

Prevent Parts from Flying

- Grease in the track adjuster is under high pressure.
  Failure to follow the precautions below may result in serious injury, blindness, or death.
  - Do not attempt to remove GREASE FITTING or VALVE ASSEMBLY.
  - Do not attempt to remove grease fitting securing cover.
  - As pieces may fly off, be sure to keep body and face away from valve.
  - Never attempt to disassemble the track adjuster. Inadvertent disassembling of the track adjuster may cause the parts such as a spring to fly off, possibly resulting in severe personal injury or death.

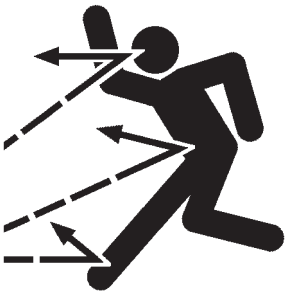

SA-344

- Travel reduction gears are under pressure.
  - As pieces may fly off, be sure to keep body and face away from AIR RELEASE PLUG to avoid injury.
  - GEAR OIL is hot. Wait for GEAR OIL to cool, then gradually loosen AIR RELEASE PLUG to release pressure.

Store Attachments Safely

- Stored attachments such as buckets, hydraulic hammers, and blades can fall and cause serious injury or death.
  - Securely store attachments and implements to prevent falling. Keep children and bystanders away from storage areas.

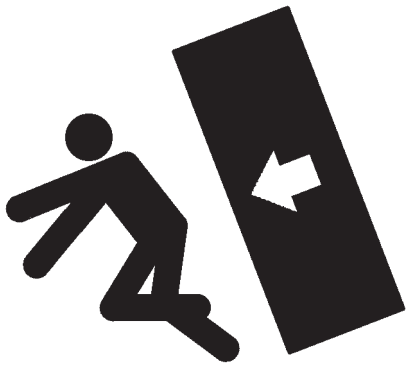

SA-034

Prevent Burns

Hot spraying fluids:

- After operation, engine coolant is hot and under pressure. Hot water or steam is contained in the engine, radiator and heater lines.
  Skin contact with escaping hot water or steam can cause severe burns.
  - To avoid possible injury from hot spraying water. DO NOT remove the radiator cap until the engine is cool. When opening, turn the cap slowly to the stop. Allow all pressure to be released before removing the cap.
  - The hydraulic oil tank is pressurized. Again, be sure to release all pressure before removing the cap.



SA-039

Hot fluids and surfaces:

- Engine oil, gear oil and hydraulic oil also become hot during operation.
  The engine, hoses, lines and other parts become hot as well.
  - Wait for the oil and components to cool before starting any maintenance or inspection work.



SA-225

Replace Rubber Hoses Periodically

- Rubber hoses that contain flammable fluids under pressure may break due to aging, fatigue, and abrasion. It is very difficult to gauge the extent of deterioration due to aging, fatigue, and abrasion of rubber hoses by inspection alone.
  - Periodically replace the rubber hoses. (See the page of "Periodic replacement of parts" in the operator's manual.)
- Failure to periodically replace rubber hoses may cause a fire, fluid injection into skin, or the front attachment to fall on a person nearby, which may result in severe burns, gangrene, or otherwise serious injury or death.



SA-019

Avoid High-Pressure Fluids

- Fluids such as diesel fuel or hydraulic oil under pressure can penetrate the skin or eyes causing serious injury, blindness or death.
  - Avoid this hazard by relieving pressure before disconnecting hydraulic or other lines.
  - Tighten all connections before applying pressure.
  - Search for leaks with a piece of cardboard; take care to protect hands and body from high-pressure fluids. Wear a face shield or goggles for eye protection.
  - If an accident occurs, see a doctor familiar with this type of injury immediately. Any fluid injected into the skin must be surgically removed within a few hours or gangrene may result.

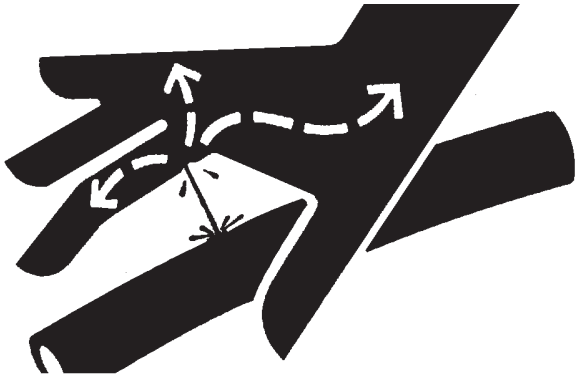

SA-031

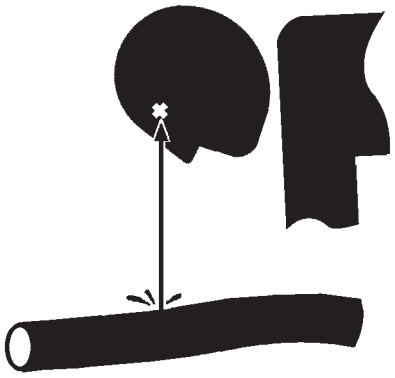

SA-292

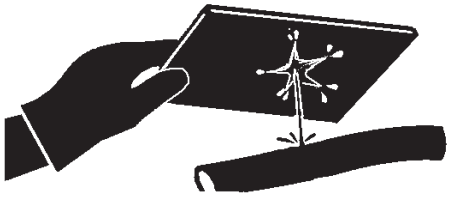

SA-044

Prevent Fires

Check for Oil Leaks:

- Fuel, hydraulic oil and lubricant leaks can lead to fires.
  - Check for oil leaks due to missing or loose clamps, kinked hoses, lines or hoses that rub against each other, damage to the oil-cooler, and loose oil-cooler flange bolts.
  - Tighten, repair or replace any missing, loose or damaged clamps, lines, hoses, oil-cooler and oil-cooler flange bolts.
  - Do not bend or strike high-pressure lines.
  - Never install bent or damaged lines, pipes, or hoses.
  - Replace fuel hoses and hydraulic hoses periodically even if there is no abnormality in their external appearance.



SA-019

Check for Shorts:

- Short circuits can cause fires.
  - Clean and tighten all electrical connections.
  - Check before each shift or after eight (8) to ten (10) hours operation for loose, kinked, hardened or frayed electrical cables and wires.
  - Check before each shift or after eight (8) to ten (10) hours operation for missing or damaged terminal caps.
  - DO NOT OPERATE MACHINE if cable or wires are loose, kinked, etc.
  - Never attempt to modify electric wirings.

Clean up Flammable Materials:

- Spilled fuel and oil, and trash, grease, debris, accumulated coal dust, and other flammable materials may cause fires.
  - Prevent fires by inspecting and cleaning the machine daily, and by removing adhered oil or accumulated flammable materials immediately. Check and clean high temperature parts such as the exhaust outlet and mufflers earlier than the normal interval.
  - Do not wrap high temperature parts such as a muffler or exhaust pipe with oil absorbents.
  - Do not store oily cloths as they are vulnerable to catching fire.
  - Keep flammable materials away from open flames.
  - Do not ignite or crush a pressurized or sealed container.
  - Wire screens may be provided on openings on the engine compartment covers to prevent flammable materials such as dead leaves from entering. However, flammable materials which have passed through the wire screen may cause fires. Check and clean the machine every day and immediately remove accumulated flammable materials.

Check Key Switch:

- If a fire breaks out, failure to stop the engine will escalate the fire, hampering fire fighting.
  Always check key switch function before operating the machine every day:
  1. Start the engine and run it at slow idle.
  2. Turn the key switch to the OFF position to confirm that the engine stops.
  - If any abnormalities are found, be sure to repair them before operating the machine.

Check Heat Shields:

- Damaged or missing heat shields may lead to fires.
  - Damaged or missing heat shields must be repaired or replaced before operating the machine.
  - If hydraulic hoses are broken while the engine cover is open, splattered oil on the high temperature parts such as mufflers may cause fire. Always close the engine cover while operating the machine.

Evacuating in Case of Fire

- If a fire breaks out, evacuate the machine in the following way:
  - Stop the engine by turning the key switch to the OFF position if there is time.
  - Use a fire extinguisher if there is time.
  - Exit the machine.
- In an emergency, if the cab door or front window can not be opened, break the front or rear window panes with the emergency evacuation hammer to escape from the cab. Refer to the explanation pages on the Emergency Evacuation Method.



SA-393



SS-1510

Beware of Exhaust Fumes

- Prevent asphyxiation. Engine exhaust fumes can cause sickness or death.
  - If you must operate in a building, be sure there is adequate ventilation. Either use an exhaust pipe extension to remove the exhaust fumes or open doors and windows to bring enough outside air into the area.

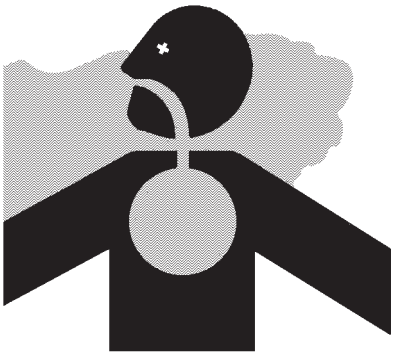

SA-016

Precautions for Welding and Grinding



SA-818

- Welding may generate gas and/or small fires.
  - Be sure to perform welding in a well ventilated and prepared area. Store flammable objects in a safe place before starting welding.
  - Only qualified personnel should perform welding. Never allow an unqualified person to perform welding.
- Grinding on the machine may create fire hazards. Store flammable objects in a safe place before starting grinding.
- After finishing welding and grinding, recheck that there are no abnormalities such as the area surrounding the welded area still smoldering.

Avoid Heating Near Pressurized Fluid Lines

- Flammable spray can be generated by heating near pressurized fluid lines, resulting in severe burns to yourself and bystanders.
  - Do not heat by welding, soldering, or using a torch near pressurized fluid lines or other flammable materials.
  - Pressurized lines can be accidentally cut when heat goes beyond the immediate flame area. Install temporary fire-resistant guards to protect hoses or other materials before engaging in welding, soldering, etc..



SA-030

Avoid Applying Heat to Lines Containing Flammable Fluids

- Do not weld or flame cut pipes or tubes that contain flammable fluids.
- Clean them thoroughly with nonflammable solvent before welding or flame cutting them.

Precautions for Handling Accumulator and Gas Damper

High-pressure nitrogen gas is sealed in the accumulator and the gas damper. Inappropriate handling may cause explosion, possibly resulting in serious injury or death.

Strictly comply with the following items: Do not disassemble the unit.

- Keep the units away from open flames and fire.
- Do not bore a hole, do not cut by torch.
- Avoid giving shocks by hitting or rolling the unit.
- Before disposing the unit, sealed gas must be released. Consult your nearest Hitachi dealer.

Remove Paint Before Welding or Heating



SA-029

- Hazardous fumes can be generated when paint is heated by welding, soldering, or using a torch. If inhaled, these fumes may cause sickness.
  - Avoid potentially toxic fumes and dust.
  - Do all such work outside or in a well-ventilated area. Dispose of paint and solvent properly.
  - Remove paint before welding or heating:

1. If you sand or grind paint, avoid breathing the dust.

   Wear an approved respirator.

2. If you use solvent or paint stripper, remove stripper with soap and water before welding. Remove solvent or paint stripper containers and other flammable material from area. Allow fumes to disperse at least 15 minutes before welding or heating.

Beware of Asbestos and Silicon Dust and Other Contamination



SA-029

- Take care not to inhale dust produced in the work site. Inhalation of asbestos fibers may be the cause of lung cancer. Inhalation of silicon dust or other contamination may cause sickness.
  - Depending on the work site conditions, the risk of inhaling asbestos fiber, silicon dust or other contamination may exist. Spray water to prevent asbestos fibers, silicon dust or other contamination from becoming airborne. Do not use compressed air.
  - When operating the machine in a work site where asbestos fibers, silicon dust or other contamination might be present, be sure to operate the machine from the upwind side and wear a mask rated to prevent the inhalation of asbestos, silicon dust or other contamination.
  - Keep bystanders out of the work site during operation.
  - Asbestos fibers might be present in imitation parts. Use only genuine Hitachi Parts.

Prevent Battery Explosions

- Battery gas can explode.
  - Keep sparks, lighted matches, and flame away from the top of battery.
  - Never check battery charge by placing a metal object across the posts. Use a voltmeter or hydrometer.
  - Do not charge a frozen battery; it may explode. Warm the battery to 16 ˚C (60 ˚F) first.
  - Do not continue to use or charge the battery when electrolyte level is lower than specified. Explosion of the battery may result.
  - Loose terminals may produce sparks. Securely tighten all terminals.
  - Connect terminals to the correct electrical poles. Failure to do so may cause damage to the electrical parts or fire.

- Battery electrolyte is poisonous. If the battery should explode, battery electrolyte may be splashed into eyes, possibly resulting in blindness.
  - Be sure to wear eye protection when checking electrolyte specific gravity.



SA-032

Service Air Conditioning System Safely

- If spilled onto skin, refrigerant may cause a cold contact burn.
  - Refer to the instructions described on the container for proper use when handling the refrigerant.
  - Use a recovery and recycling system to avoid leaking refrigerant into the atmosphere.
  - Never touch the refrigerant.



SA-405

Handle Chemical Products Safely

- Direct exposure to hazardous chemicals can cause serious injury. Potentially hazardous chemicals used with your machine include such items as lubricants, coolants, paints, and adhesives.
  - A Safety Data Sheet (SDS) provides specific details on chemical products: physical and health hazards, safety procedures, and emergency response techniques.
  - Check the SDS before you start any job using a hazardous chemical. That way you will know exactly what the risks are and how to do the job safely. Then follow procedures and use recommended equipment.
  - See your authorized dealer for SDS's (available only in English) on chemical products used with your machine.



SA-2579

Dispose of Waste Properly

- Improperly disposing of waste can threaten the environment and ecology. Potentially harmful waste used with HITACHI equipment includes such items as oil, fuel, coolant, brake fluid, filters, and batteries.
  - Use leakproof containers when draining fluids. Do not use food or beverage containers that may mislead someone into drinking from them.
  - Do not pour waste onto the ground, down a drain, or into any water source.
  - Air conditioning refrigerants escaping into the air can damage the Earth's atmosphere. Government regulations may require a certified air conditioning service center to recover and recycle used air conditioning refrigerants.
  - Inquire on the proper way to recycle or dispose of waste from your local environmental or recycling center, or from your authorized dealer.

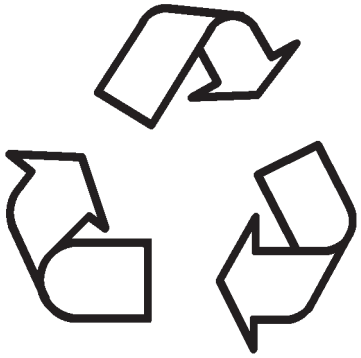

SA-226

Never Ride Attachment

Never allow anyone to ride attachments or load. This is an extremely dangerous practice.

Precautions for Communication Terminal

Electrical wave transmitted from the communication terminal may cause malfunction of other electronic devices. Inquire the device manufacturer for electrical wave disturbance upon using an electronic device near the communication terminal.

Precaution for Communication Terminal Equipment

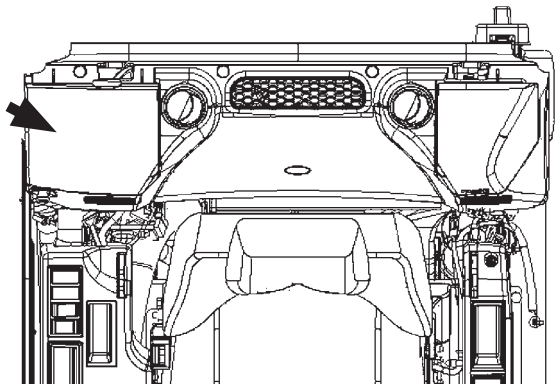

SA-2346

This machine has a communication terminal equipment emitting electrical waves installed inside a rear tray which is situated at the back of the driver's seat. There is a possibility that a medical device, including an implantable device such as a cardiac pacemaker, would be affected and would malfunction by the electrical waves emitted from the communication terminal equipment.

Any person affixed with a medical device such as the above should not use this machine, unless the medical device and the rear tray are at least 22 centimeters (8.662 inches) apart at all times. If such condition cannot be met, please contact our company's nearest dealer and have the person in charge stop the communication terminal equipment from functioning completely and confirm that it is not emitting electrical waves.

Specific Absorption Rate ("SAR") (measured by 10 g per unit) of communication terminal equipments:

E-GSM900	0.573 W/Kg (914.80 MHz)
DCS-1800	0.130 W/Kg (1710.20 MHz)
WCDMA Band I	0.271 W/Kg (1950.00 MHz)

*This data was measured by having each type of communication terminal equipment, such as the communication terminal equipment used with this machine, and a human body set apart by 3 cm (1.18 inches).
* SAR is a measure of the amount of radio frequency energy absorbed by the body when using a wireless application such as a mobile phone.

In Japan: *Under the Japanese Radio Act and other relevant Japanese regulations, the maximum SAR value is 2 W/kg (as of March 2010).

In EU Member nation: *Under the "Council Recommendation 1999/519/EC 12 July 1999'; the maximum SAR value is 2 W/kg (as of March 2010).

- Do not attempt to disassemble, repair, modification and displacement of the communication terminal, antenna and cables. Failure to do so may cause damage or fire on the machine and the communication terminal. (Before removing or installing the communication terminal, consult your authorized Hitachi dealer.)

- Do not pinch or forcibly pull cables, cords and connectors. Failure to do so may cause damage or fire on the machine and the communication terminal due to short/broken circuit.

Notes on Protection of Operator's Station When the Machine Rolls Over

The cab corresponds to the structure to protect the operator by absorbing impact energy when the machine rolls over (Roll-Over Protective Structure (ROPS)).
However, when the machine mass exceeds the maximum operating mass described in the ROPS certification by modifying the machine or installing a special attachment, the cab can not fulfill its protective function, possibly causing serious injury or death.

In order to ensure the protective structure, follow the instructions below.

- Consult your authorized dealer before welding parts or drilling a hole on the cab, which possibly reduces the cab strength.
- Be sure to always fasten the seat belt when operating the machine. If the machine rolls over without operator fastening the seat belt, the operator may become injured, may be thrown out from the cab and/or may become crushed under the machine even though the cab has the protective structure.

The ROPS certification is valid under the following conditions.

- The machine mass is lower than the maximum operating mass described in the ROPS certification.
- The ROPS is properly installed.
- No modification is made to the ROPS.
- The ROPS is free from damage.

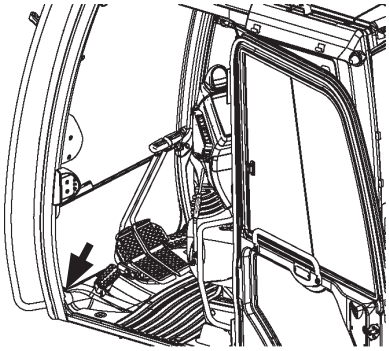

ZX75US-5A MDAA-01-298

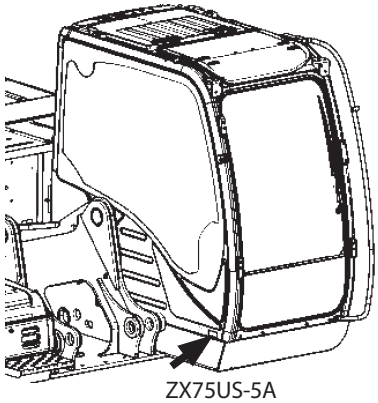

ZX75US-5A MDED-01-506

(Year of Manufacturing; From Nov. 2015
For Australia and Newzealand)

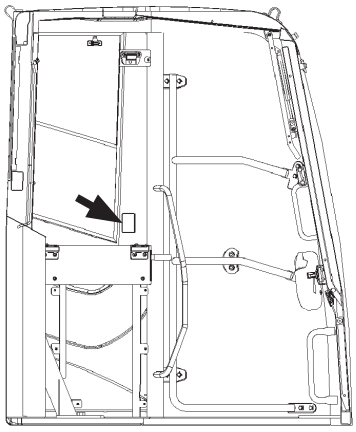

ZX85USB-5A MDEP-00-001

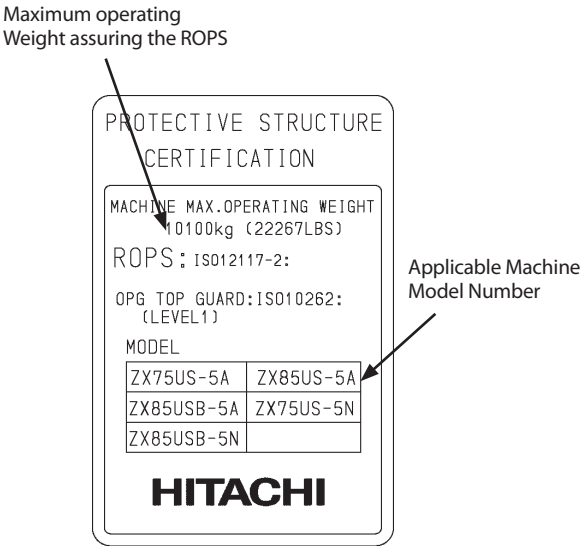

ZX75US-5A, 85USB-5A SS-3491

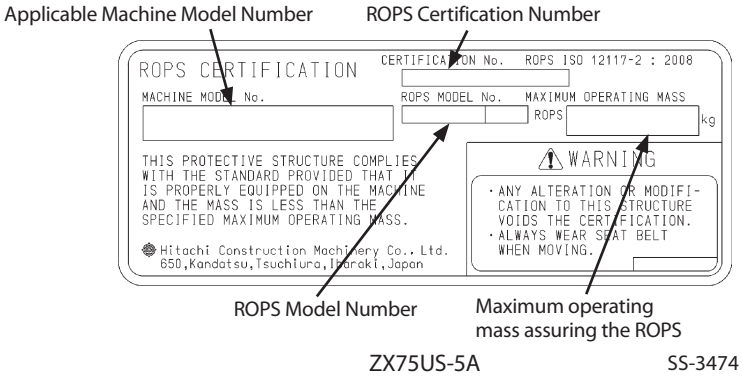

ZX75US-5A SS-3474

(Year of Manufacturing; From Nov. 2015
For Australia and Newzealand)

SAFETY SIGNS

All safety signs and their locations affixed on the machine are illustrated in this group. Make sure of the contents described in the safety signs through reading actual ones affixed on the machine to ensure safe machine operation. Always keep the safety signs clean. In case a safety sign is broken or lost, immediately, obtain a new replacement and affix it again in position on the machine. Use the part No. indicated under the right corner of each safety sign illustration when placing an order of it to the Hitachi dealer.

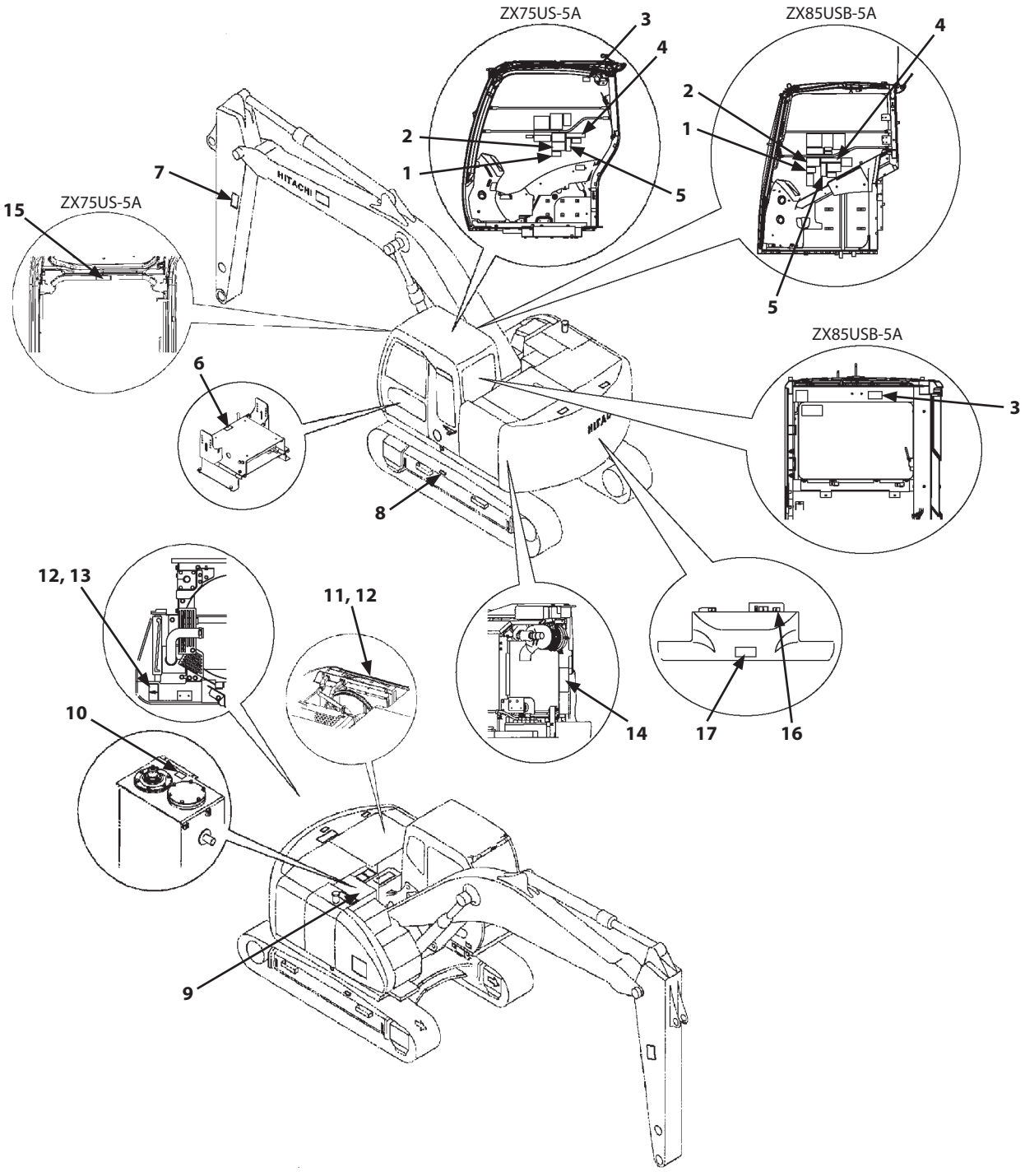

SS-3457

1.

WARNING!

Prior to operation, maintenance, disassembling, and transportation of the machine, be sure to read and understand the Operator's Manual.

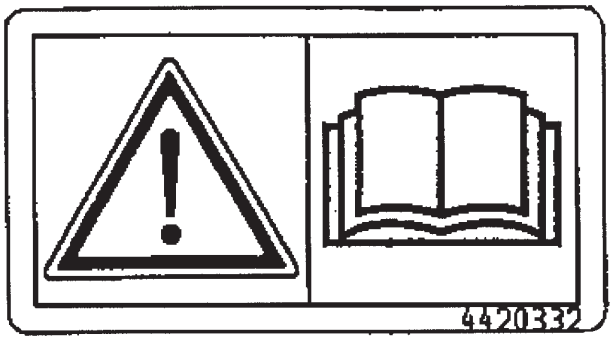

SS4420332

2.

Sign indicates an electrocution hazard if machine is brought too near electric power lines.
Keep a safe distance from electric power lines.

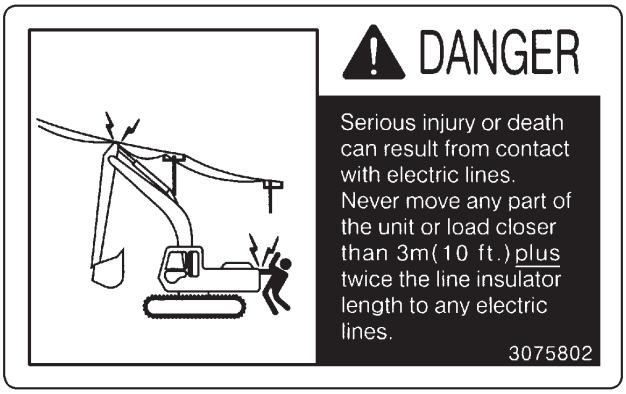

SS-862

3.

Sign indicates a hazard from falling window.
After raising window, be sure to lock it in place with lock pins.



SS-863

4.

Do not extend your hands or head from the window. Your hands or head may come in contact with the boom.

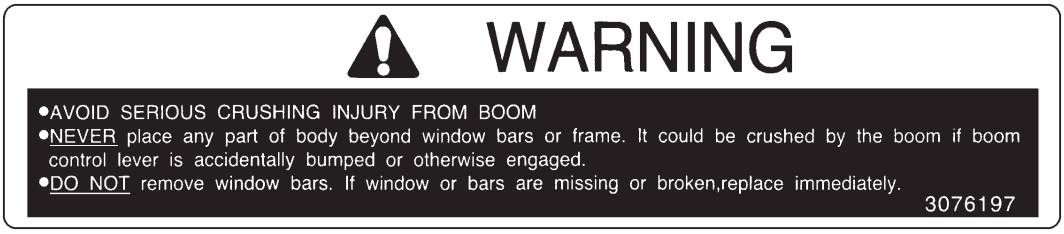

SS-859

5.

If the machine should overturn, the operator may become injured and/or throw from the cab and/or crushed by the overturning machine.



SS3088058

6.

When moving the seat height/tilt lever downward, press the lever grip with a palm from the top side. Do not grasp the lever grip to operate the lever, possibly resulting in pinch of your fingers into the seat stand.

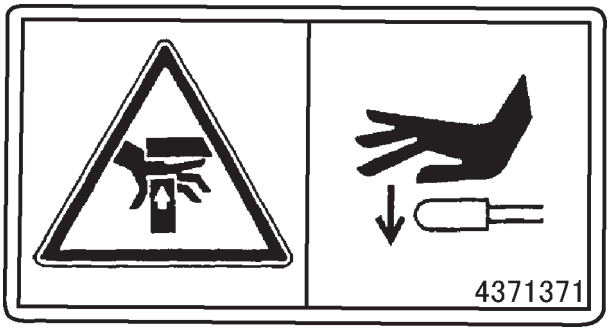

SS4371371

7.

Sign indicates a hazard of being hit by the working device of the machine.
Keep away from machine during operation.



SS3092845

8.

Sign indicates a hazard of a flying plug from track adjuster that could cause injury.
Read manual before adjusting track for safe and proper handling.



SS-408

9.

Sign indicates a burn hazard from compressed air and spurting hot oil if the oil inlet is uncapped during or right after operation.
Read manual for safe and proper handling.

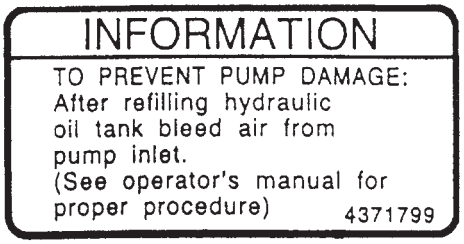

SS4371799

10.

Sign indicates a burn hazard from spurting hot water or oil if radiator or hydraulic oil tank is uncapped while hot.
Allow radiator or hydraulic oil tank to cool before removing cap.

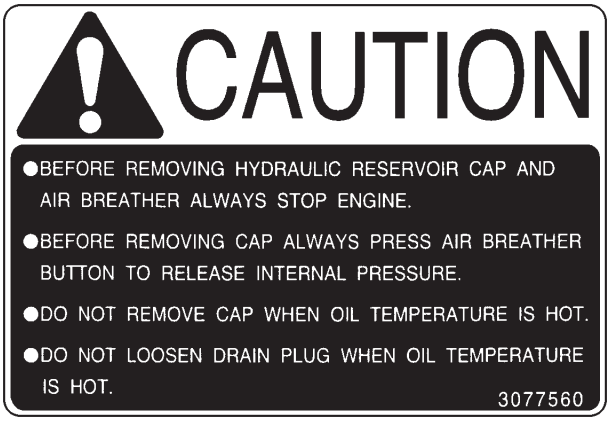

SS-864

11.

Sign indicates a burn hazard from spurting hot water or oil if radiator or hydraulic oil tank is uncapped while hot.
Allow radiator or hydraulic oil tank to cool before removing cap.



SS4456963

12.

Sign indicates the hazard of rotating parts, such as fan, etc that could cause injury by being caught.
Turn off before inspection and maintenance.

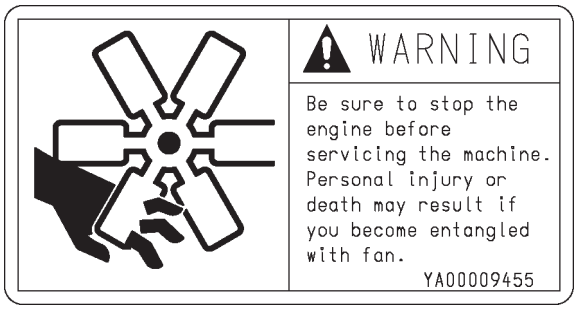

SSYA00009455

13.

Sign indicates a hazard of rotating parts, such as belt.
Turn off before inspection and maintenance.

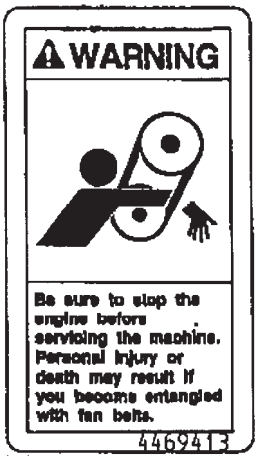

SS4469413

14.

Sign indicates an explosion hazard.
Keep fire and open flames away from this area.
Skin contact with electrolyte will cause burns. Splashed electrolyte into eyes will cause blindness. Take care not to touch electrolyte.

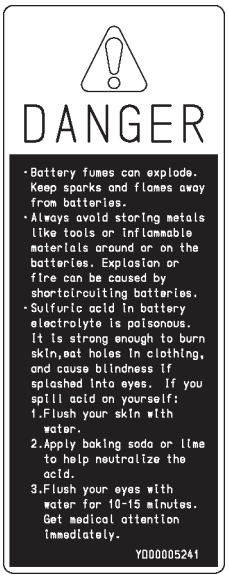

SSYD00005241

15.



SS4467093

16.

Possible severe burns. Do not touch the engine components while they are hot.

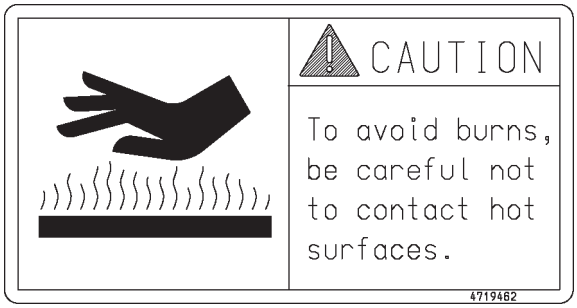

SS4719462

17.

Sign indicates a crush hazard by rotation of upper structure of the machine.
Keep away from swinging area of machine.



SS-024

MEMO

Components Name

1- Bucket
2- Bucket Cylinder
3- Arm
4- Arm Cylinder
5- Boom Cylinder
6- Boom
7- Fuel Tank
8- Hydraulic Oil Tank
9- Engine
10- Counterweight
11- Blade
12- Blade Cylinder
13- Travel Device
14- Track
15- Front Idler
16- Cab
17- Boom Swing Post
18- Boom Swing Cylinder

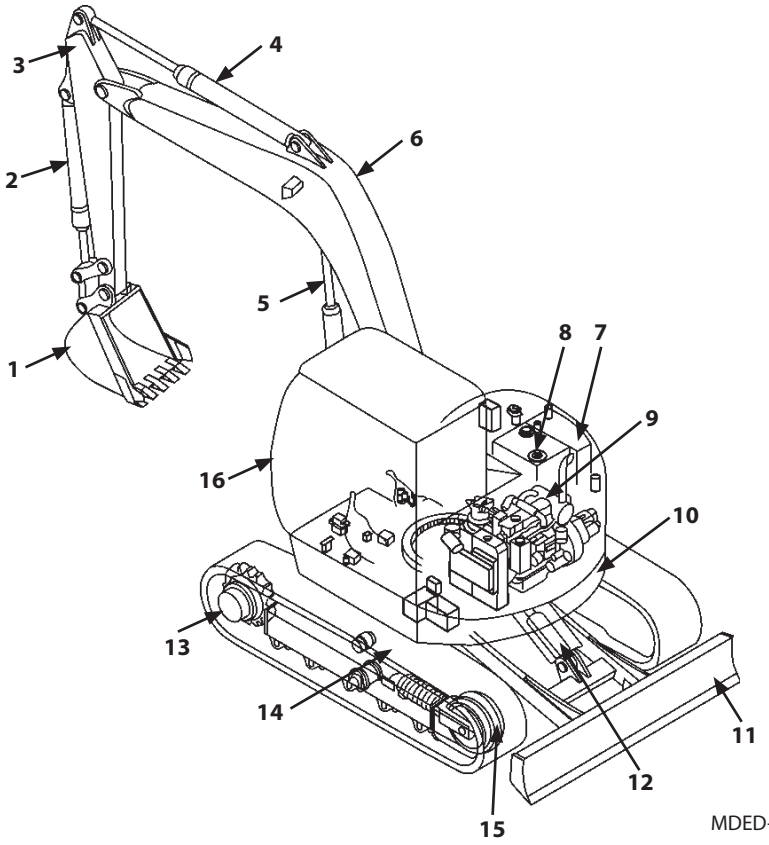

MDED-01-001

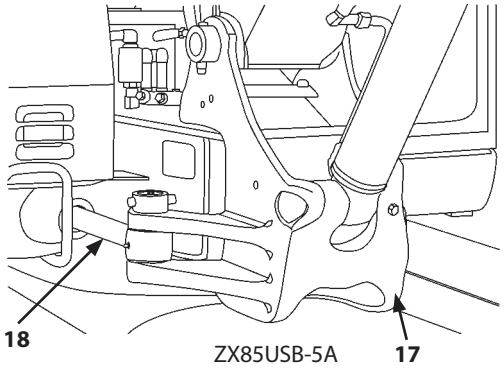

ZX85USB-5A

MDED-01-002

Getting ON/OFF the Machine

Handrails (1) are provided in and around the machine.
These are used to get on and off the cab safely as well as to do inspection and maintenance of the machine safely.
Never jump on or off the machine as it is very dangerous.

⚠ WARNING:

- **Never attach a wire on the handrails (1) to lift the cab or main body or while transporting the machine on a truck or trailer as it is dangerous.**
- **The door handle (2) is not a handrail. Do not use the door handle (2) as a handrail when getting on and off the machine.**
- **Do not hold the control levers (3) or pilot control shut-off lever (4) when getting on and off the machine.**

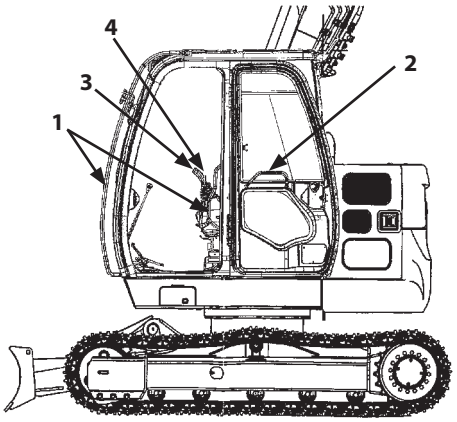

ZX75US-5A MDED-01-016

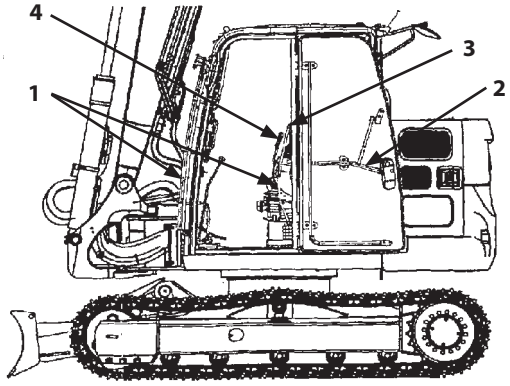

ZX85USB-5A MDED-01-015

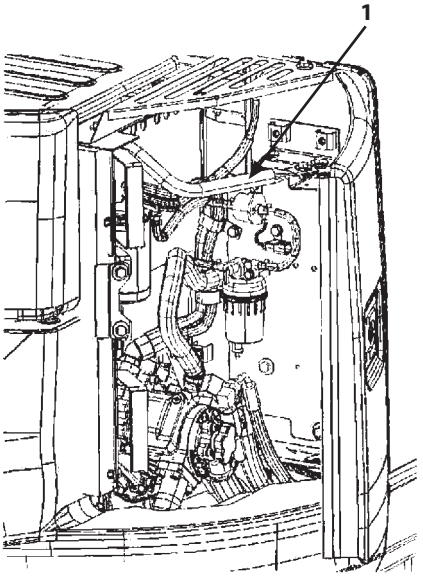

Inside of Right Rear Cover MDED-01-017

Cab Features

ZX75US-5A

1- Left Control Lever/Horn Switch
2- Left Travel Pedal
3- Left Travel Lever
4- Right Travel Lever
5- Right Travel Pedal
6- Right Control Lever
7- Multi Function Monitor Panel
8- Switch Panel
9- Key Switch
10- Document Holder
11- Operator's Seat
12- Cab Door Release Lever
13- Pilot Control Shut-Off Lever
14- Fuse Box
15- Cigar Lighter
16- Switch Panel (for Optional Equipment)
Glove Compartment (without Optional Equipment)
17- Glove Compartment (Hot and Cool Box)
18- Engine Stop Switch

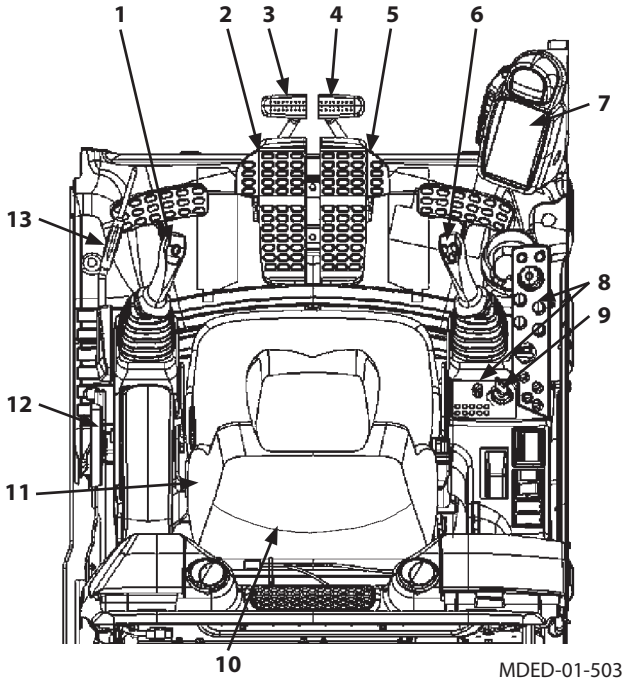

MDED-01-503

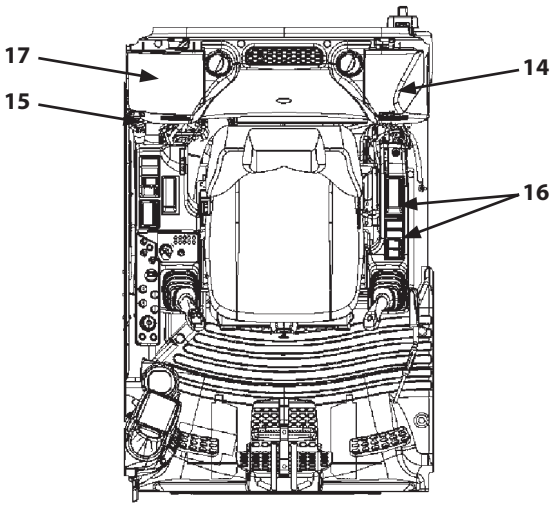

MDCN-01-003

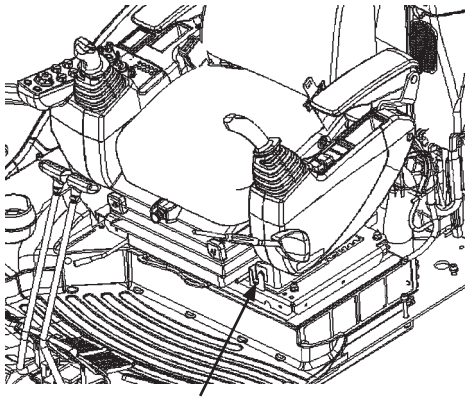

MDCN-01-004

ZX85USB-5A

1- Left Control Lever/Horn Switch
2- Left Travel Pedal
3- Left Travel Lever
4- Right Travel Lever
5- Right Travel Pedal
6- Right Control Lever (On Top of Lever)
7- Multi Function Monitor Panel
8- Switch Panel
9- Key Switch
10- Document Holder
11- Operator's Seat
12- Cab Door Release Lever
13- Pilot Control Shut-Off Lever
14- Fuse Box
15- Cigar Lighter
16- Switch Panel (for Optional Equipment)
17- Engine Stop Switch
18- Boom Swing Pedal

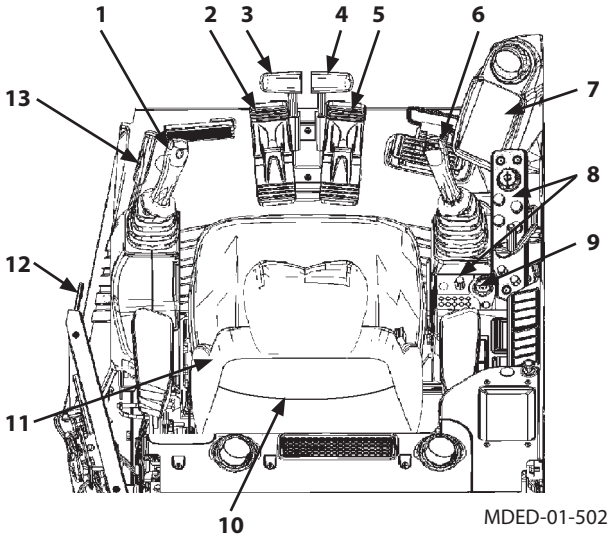

MDED-01-502

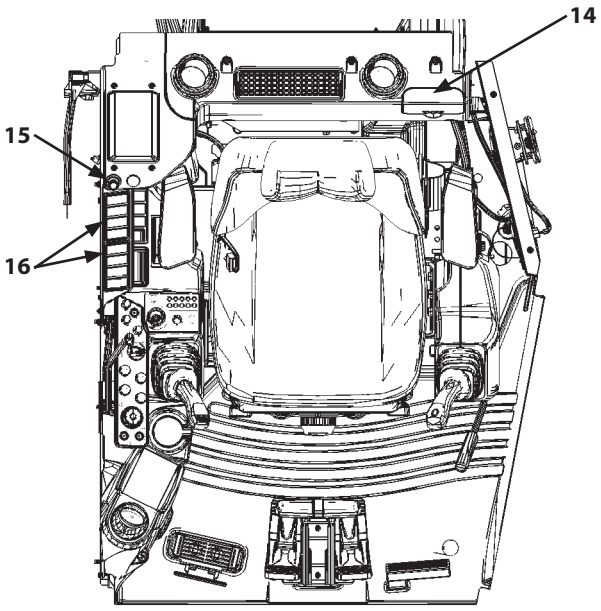

MDED-01-289

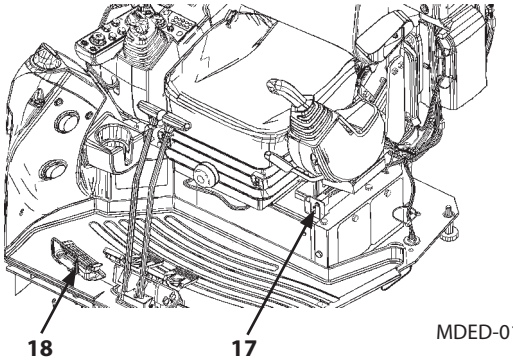

MDED-01-005

Multi Function Monitor

Feature

The multi function monitor displays various meters, indicators, radio and air conditioner, numeric keypad lock function, rearview camera image, work mode selection and maintenance screen.

Screen Configuration

The multi function monitor consists of the following screens.
There are 6 menus, and a further 13 sub menus.

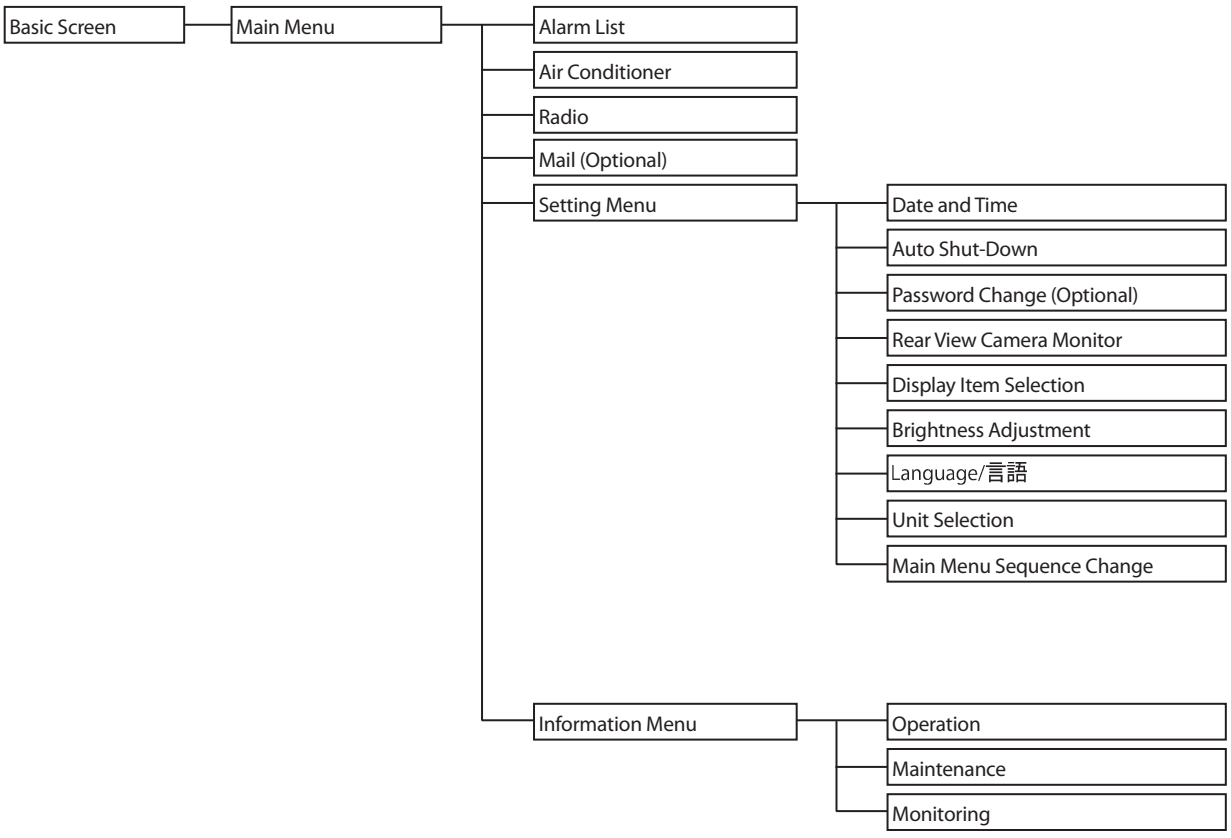

Default Setting

Function	Item	Default
Auto Shut-Down	ON/OFF of Auto Shut-down	OFF
	Setting Time	1 min

NOTE: Typical functions are shown in the table. Check the initial values of other functions on each monitor screen.

Basic Screen

1- Work Mode Display
2- Auto-Idle Display
3- Power Mode Display
4- Hour Meter, Clock
5- Auxiliary
6- Auxiliary
7- Preheat Display
8- Seat Belt Display
9- Fuel Gauge
10- Radio Display
11- Air Conditioner Display
12- Coolant Temperature Gauge
13- Auxiliary
14- Overload Alarm Display (Optional)
15- Travel Mode Indicator
16- Auto Shut-Down Display

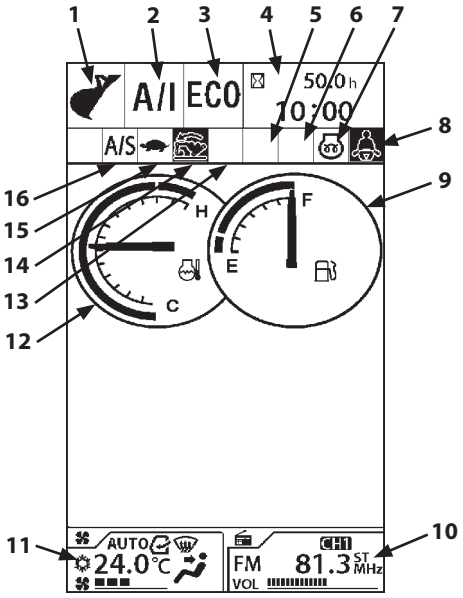

MDED-01-505

How to Use Screens

Displaying Basic Screen

IMPORTANT: Start the engine after the basic screen is displayed.

When the key switch is turned to the ACC or ON position, the starting screen displays for about two seconds. When the key switch is kept in ACC position, only hour meter, clock and radio will be displayed. When the key switch is turned from ACC to ON position, the basic screen will be displayed.



Starting Screen

MDAA-01-003EN

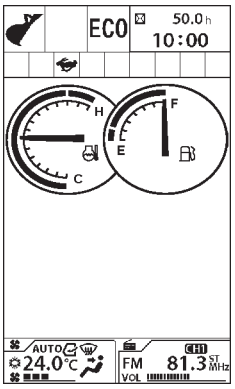

Basic Screen

MDAA-01-001EN

IMPORTANT: When the key switch is turned to ON position, the alternator alarm will be displayed on the basic screen. Until the alternator starts generating power after the engine starts, the alternator alarm is displayed on the basic screen.

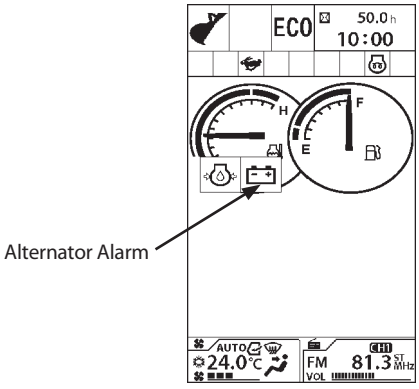

MDEC-01-042

- Display of Meters
  Items to be displayed
  4- Hour Meter, Clock

  9- Fuel Gauge

  12- Coolant Temperature Gauge

- Work Mode Display
  The attachments being used are displayed.

  Digging Mode

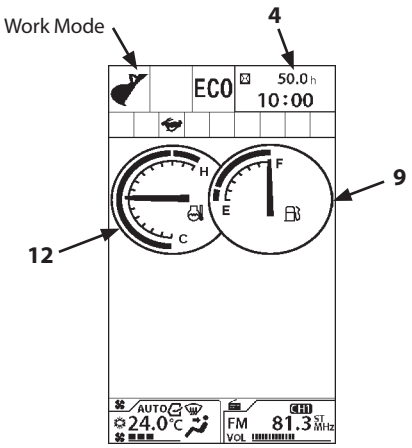

MDAA-01-001EN

- Auto-Idle Display (2)
  When the auto-idle is selected from the switch panel, the auto-idle display (2) displays.
  When the key switch is turned ON while the auto-idle switch is also ON, the auto-idle display blinks for 10 seconds.

- Power Mode Display (3)
  Displays the power mode selected from the switch panel.

- Preheat Display (7)
  While the current is being supplied to the glow plug, the indicator is displayed.

- Seat Belt Display (8)
  Turns ON when the key switch is in the ON position, and turns OFF 5 seconds after the engine starts.

- Radio Display (10)
  Displays the radio panel

- Air Conditioner Display (11)
  Displays the air conditioner panel.

- Overload Alarm Display (14) (Optional)
  The system measures the load of suspended load from the bottom pressure of boom cylinder. When overload is detected, an alarm is displayed.

- Travel Mode Display (15)
  Displays the travel mode selected from the switch panel.

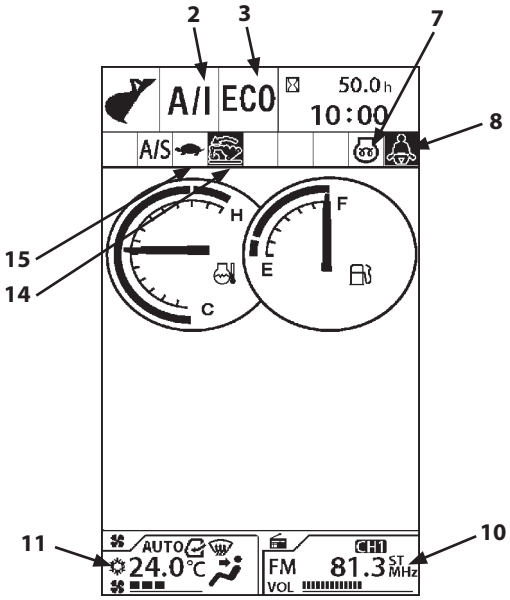

MDED-01-505

- Auto Shut-Down Display (16)
  When the auto shut-down is turned ON from the menu screen, the auto shut-down display (16) displays.
  When the key switch is turned ON while the auto shut-down is enabled, the auto shut-down display blinks for 10 seconds.

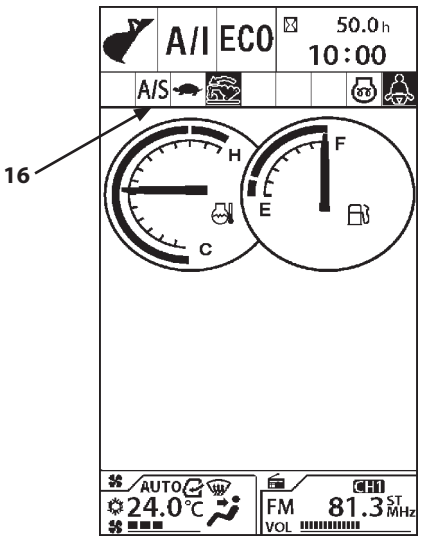

MDED-01-505

Hour Meter

Total (accumulated) machine operation hours counted since the machine started working, are displayed in hours (h).
One digit after the decimal point indicates tenths of an hour (6 minutes).

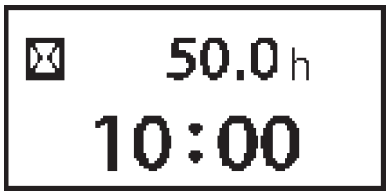

MDAA-01-021EN

Clock

Indicates the present time.
24-h/12-h display can be selected.
(Refer to "Date and Time" for switching the display mode.)

Fuel Gauge

The remaining fuel amount is indicated by the needle.
Refuel before the needle reaches "E".

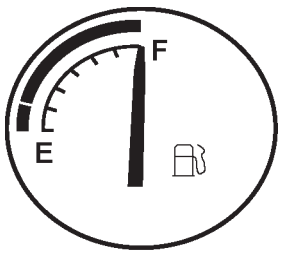

MDAA-01-276

Coolant Temperature Gauge

The engine coolant temperature is indicated with a needle. Normally the needle is around the center of the scale during operation.

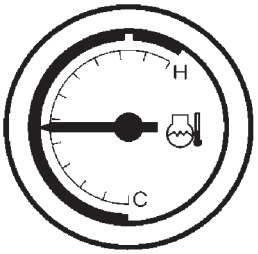

M1U1-01-047

Operating Status Icon Display

Displays icons indicating the current status of the power mode (1), preheat indicator (2), travel mode (3), auto shut-down (4) ON and auto-idle (5) ON selected from the switch panel, when these systems are activated.

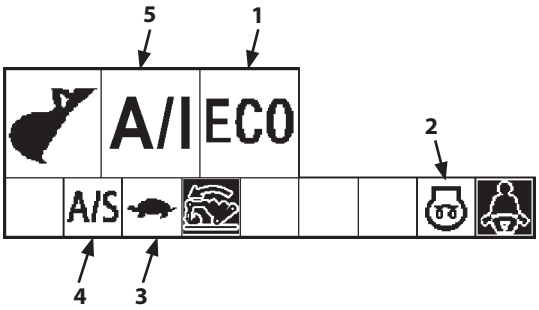

MDED-01-501

Security Functions (Optional)

Input Password

IMPORTANT:

- **When required to activate the numeric keypad function, consult your nearest Hitachi dealer.**
- **If the password is forgotten, the machine must be modified. Be extremely careful not to forget the password.**



Starting Screen

MDAA-01-003EN

1. Turn the key switch ON. After the starting screen is displayed, the password input screen will be displayed.

2. Input a password by using the numeric keypad.

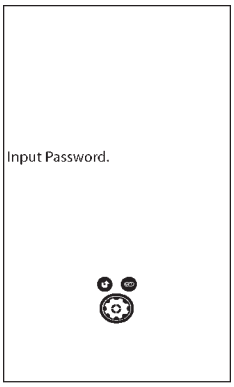

Password Input Screen

MDAA-01-085EN

3. The monitor unit matches the input password to the registered one. If they match, the basic screen displays. The engine is ready to run. If an incorrect password is input three times, a buzzer sounds for thirty seconds. During that time, the buzzer does not stop even if the key switch is turned ON/OFF.

NOTE: If you make a mistake while entering the password, push the CLEAR key in order to erase the entered characters.

4. After thirty seconds, if the key switch is turned to the ON position, the starting screen displays and the password input screen displays again. Then the password can be input again.
5. If an incorrect password is input again, the buzzer sounds for a further thirty seconds.

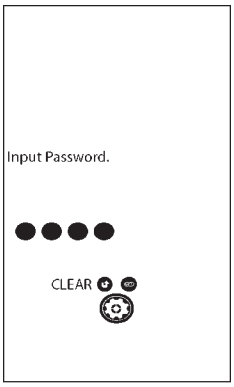

MDAA-01-086EN

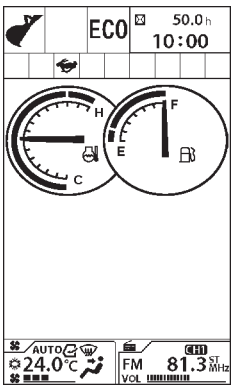

Basic Screen

MDAA-01-001EN

Extending Password Duration Time

IMPORTANT: This operation is applicable only to those machines that require a password.

By using the password duration screen, password duration time can be set. When restarting the machine, a password need not be input within the specified timeframe.

1. When turning the key switch from ON to ACC position, the monitor unit displays the password duration screen for ten seconds.

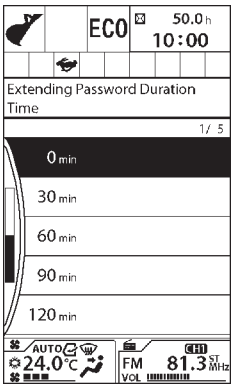

MDAA-01-087EN

Password Duration Screen (Key Switch: OFF)

2. While the password duration screen is still displayed, rotate selector knob (1) to highlight the relevant time. Pushing selector knob (1) sets the password duration time.

   Duration time 0 minute
   Duration time 30 minute
   Duration time 60 minute
   Duration time 90 minute
   Duration time 120 minute

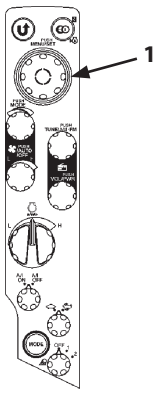

MDCD-01-026

NOTE: If the password duration time is not set explicitly, a duration of 0 is assumed.

3. If turning the key switch to the ON position within the password duration time, the monitor unit displays the basic screen after the starting screen.



MDAA-01-003EN

Starting Screen

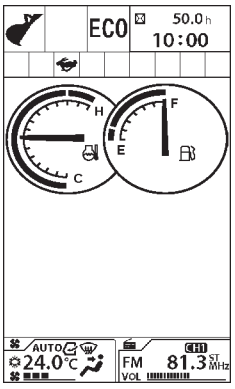

MDAA-01-001EN

Alarm Occurrence Screen

In case any abnormality occurs, alarm marks (1) are displayed on the basic screen.
If six or more alarms are generated, the alarm marks (1) can be scrolled by rotating switch (2).

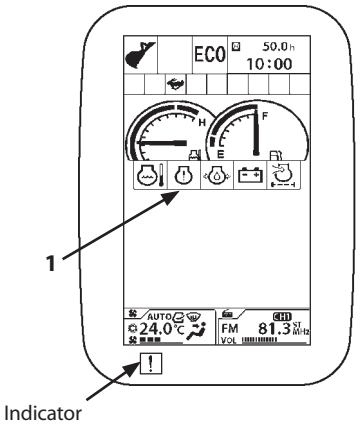

MDED-01-316

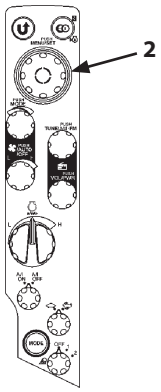

MDCD-01-026

Follow the procedure below to display detailed information for an alarm.

Push selector knob (1) on the basic screen to display the main menu.

Rotate selector knob (1) to select the alarm list, and push selector knob (1).

Rotate selector knob (1) to select a required alarm from the alarm list, and push selector knob (1).

Detailed information of the selected alarm will be displayed.

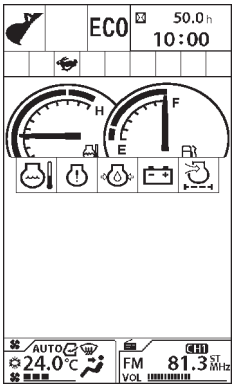

MDED-01-004

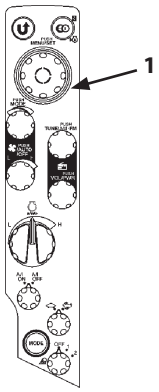

MDCD-01-026

CAUTION: The main menu displays the alarm list only when an alarm occurs.

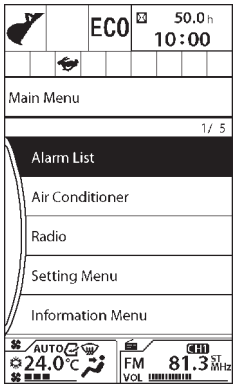

MDED-01-077EN

CAUTION: The alarm list contains only currently generated alarms.

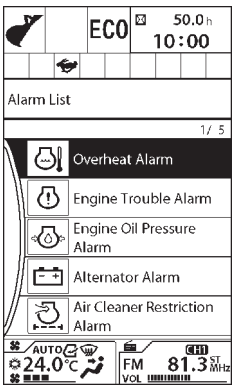

MDED-01-078EN

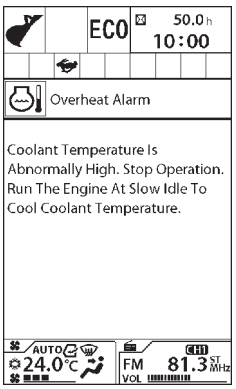

MDED-01-079EN

Remedy

Display	Contents of Alarms	Remedy
	Overheat Alarm*	Engine coolant temperature has abnormally increased. Stop operation. Run the engine at slow idle speed to lower the coolant temperature.
	Engine Trouble Alarm**	Engine or engine related parts are abnormal. Consult your nearest Hitachi dealer.
	Engine Oil Pressure Alarm	Engine oil pressure has decreased. Immediately stop the engine. Check the engine oil system and oil level.
	Engine Start Disabled	As the pilot shut-off lever is lowered, the engine cannot start.
	Engine Start Disabled	As the engine emergency switch is ON, the engine cannot start.
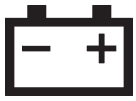	Alternator Alarm	Electrical system is abnormal. Check alternator and battery system.
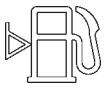	Fuel Level Alarm	Fuel level is low. Refill fuel as soon as possible.

NOTE:

**Alarm mark is displayed and buzzer will sound. Turn engine control dial to the slow idle position, and buzzer will stop.*

***Alarm mark is displayed and buzzer will sound.*

Display	Contents of Alarms	Remedy
	Hydraulic Oil Filter Restriction Alarm	The hydraulic oil filter is clogged. Clean or replace the hydraulic oil filter.
	Air Cleaner Restriction Alarm	Air filter elements are clogged. Clean or replace air filter elements.
	System Failure Alarm	Communication system is abnormal. Consult your nearest Hitachi dealer.
	Pilot Control Shut-Off Lever Alarm	Pilot control shut-off lever system is abnormal. Consult your nearest Hitachi dealer.
	Electric Lever Alarm	Electric lever system is abnormal. Consult your nearest Hitachi dealer.

NOTE: The hydraulic oil filter alarm lights only when the high performance element (optional) is used.

- Fuel Sensor Error Display
  If the fuel sensor is faulty, the color of the fuel mark changes and the needle disappears. If the harness between the fuel sensor and the controller unit is broken, the needle disappears.

- Coolant Temperature Sensor Error Display
  If the coolant temperature sensor is faulty, color of the temperature mark changes and the needle disappears. If the harness between the temperature sensor and the controller unit is broken, the needle disappears.

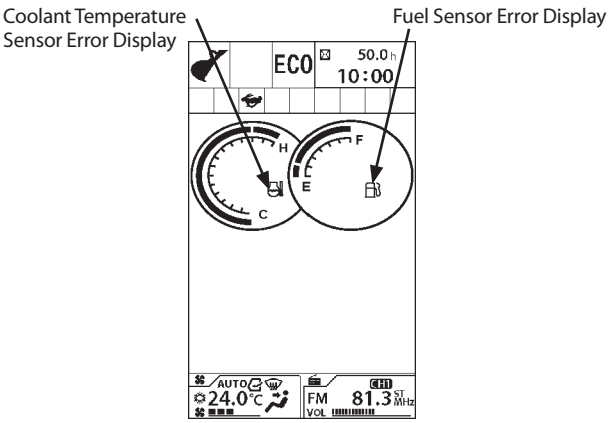

MDAA-01-024EN

Main Menu

Press selector knob (2) while displaying basic screen (1) to display main menu screen (3).
The main menu screen contains the items shown in the figure to the right. The alarm list is displayed only when an alarm is generated.
Mail (optional) menu will not be displayed unless they are set beforehand.

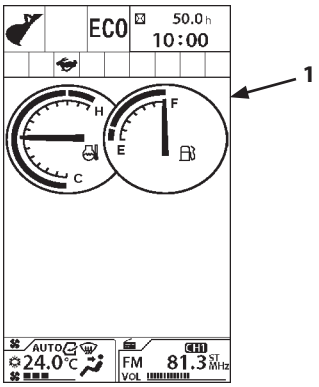

MDAA-01-001EN

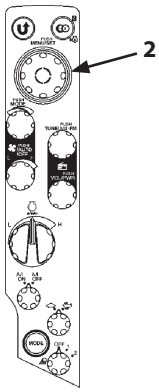

MDCD-01-026

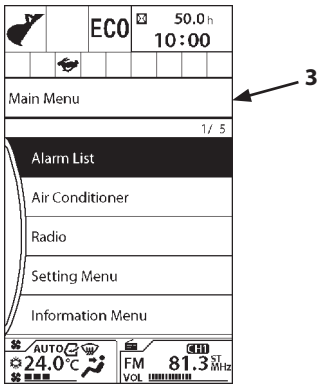

MDED-01-077EN

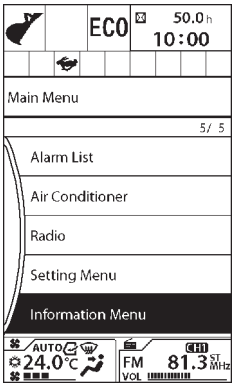

MDED-01-190EN

Air Conditioner

Most air conditioner functions are operated by using switches (3) and (4), however air vent selection and turning A/C ON and OFF are performed from the air conditioner setting screen in the menu. (Refer to the page 1-85)

Circulation Air Mode

1. Press selector knob (2) while displaying Basic Screen (1) to display Main Menu screen (5).
2. Rotate selector knob (2) to highlight Air Conditioner (6).
3. Press selector knob (2) to display Air Conditioner screen (7).

   Rotate selector knob (2) to highlight (8) mark.
4. Press selector knob (2) to set the circulation mode.
5. Press selector knob (2) again to switch the fresh air mode.

Air Conditioner ON/OFF

1. Rotate selector knob (2) to highlight A/C (9).
2. Press selector knob (2) to turn the air compressor ON.
3. Press selector knob (2) again to turn the air compressor OFF.

NOTE: When the function is ON, the mark "■" is displayed in green. When the function is OFF, the mark "■" is displayed in gray.

IMPORTANT: If mark (10) is displayed on the air conditioner display, communication between the air conditioner and the monitor is abnormal. Consult your nearest Hitachi dealer.

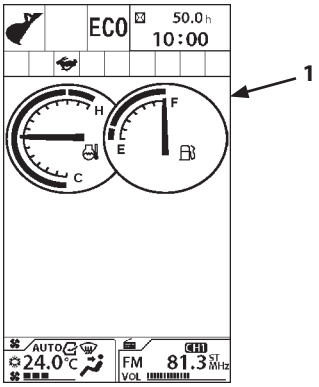

MDAA-01-001EN

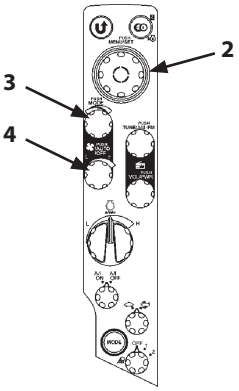

MDCD-01-026

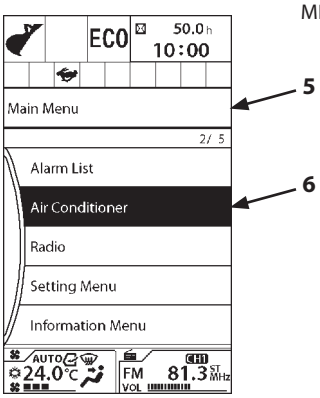

MDED-01-089EN

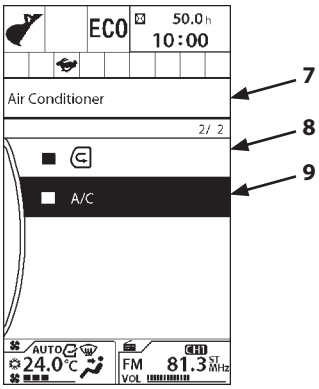

MDAA-01-091EN

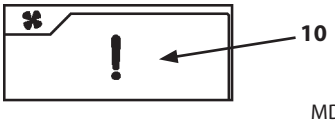

MDAA-01-226

Radio

Most radio functions are operated by using switches (3) and (4), however memory channel setting, seek function, TONE adjustment, and AUTO PRESET are done at the radio screen in the main menu.

1. Press selector knob (2) while displaying Basic Screen (1) to display Main Menu screen (5).
2. Rotate selector knob (2) to highlight Radio (6).
3. Press selector knob (2) to display the radio screen.

(Refer to the page 1-93)

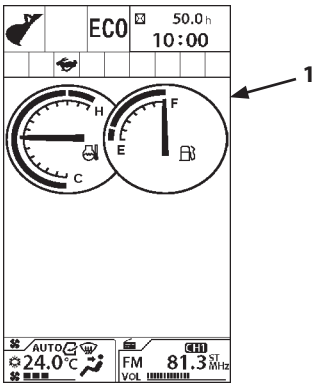

MDAA-01-001EN

IMPORTANT: If mark (7) is displayed on the radio display, communication between the radio and the monitor is abnormal. Consult your nearest Hitachi dealer.

Press the numeric keypad of 1 to 8 while the radio is ON, the radio station will switch to memorized channel of 1 to 8. (Refer to 1-72 and 1-94)

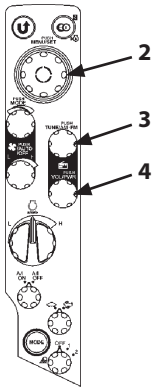

MDCD-01-026

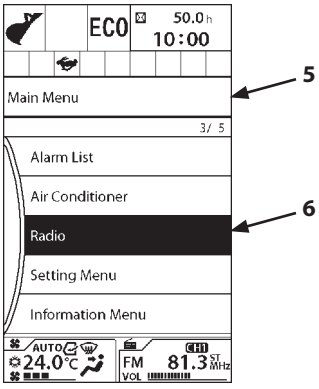

MDED-01-092EN



MDAA-01-227

Mail (Optional)

IMPORTANT: This function is available only to a machine equipped with a communication terminal. When using the mail function, consult your nearest Hitachi dealer.

1. Press selector knob (2) while displaying Basic Screen (1) to display Main Menu screen (3).
2. Rotate selector knob (2) to highlight Mail (4).
3. Press selector knob (2) to display Mail screen (5).
4. Rotate selector knob (2) to highlight desired request.
5. Press selector knob (2) to send mail information to the comunication terminal.
   - General Request
   - Fuel Replenishment Request
   - Service Maintenance Request
   - Forwarding Request

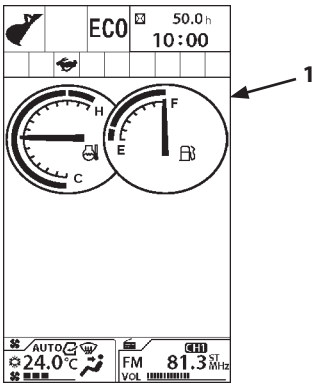

MDAA-01-001EN

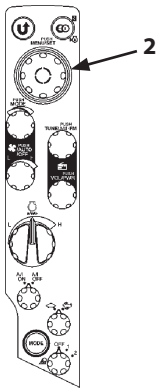

MDCD-01-026

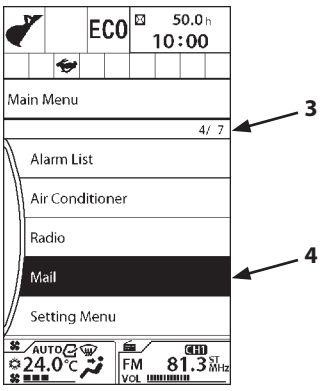

MDED-01-109EN

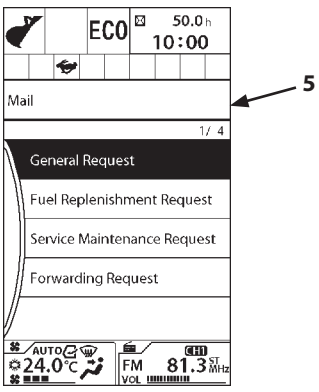

MDAA-01-110EN

6. While mail information is sent to the communication terminal, the message "Wait." is displayed on the screen.

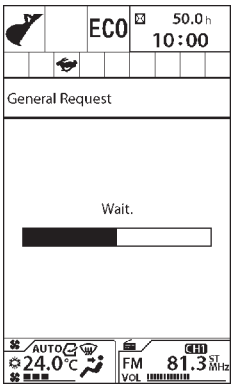

MDAA-01-111EN

7. When the communication terminal completes receiving mail information, the message "Request Is Accepted." is displayed on the screen.

   Push the back key to return to the Mail screen.

8. Then, a mail is sent from the communication terminal to the central server.

NOTE: Depending on the machine's operating environment, the mail may not be sent.

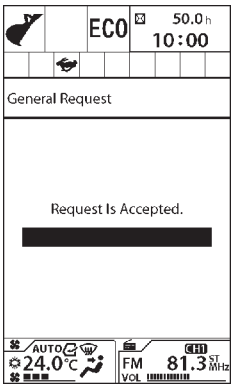

MDAA-01-112EN

NOTE: When the communication terminal could not receive the mail, the message "Failed." is displayed on the screen.

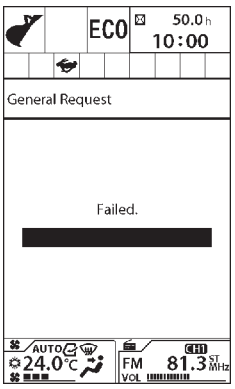

MDAA-01-113EN

Setting Menu

Setting menu consists of date and time setting, attachment adjustment, attachment name, auto shut-down setting, change password, brightness adjustment of back monitor and screen.

1. Press selector knob (2) while displaying Basic Screen (1) to display Main Menu screen (3).
2. Rotate selector knob (2) to highlight Setting Menu (4).
3. Press selector knob (2) to display Setting Menu screen (5).

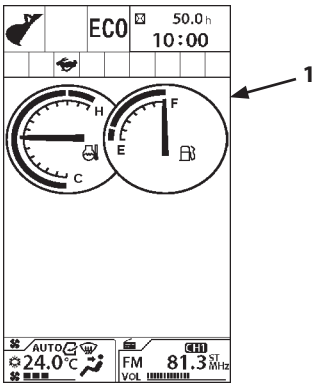

MDAA-01-001EN

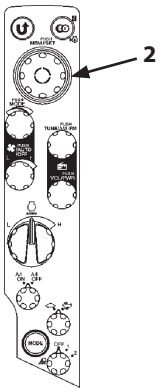

MDCD-01-026

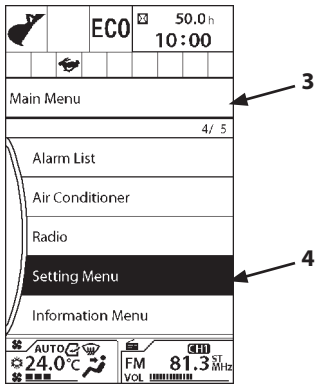

MDED-01-114EN

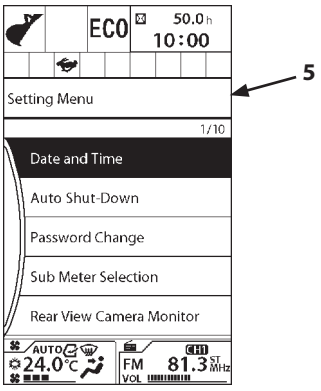

MDED-01-115EN

Date and Time

Time, date and display mode can be set on this screen. Year-month-day format and 24h/12h display mode are selected in the display setting.

Time Adjustment

1. Press selector knob (2) while displaying Basic Screen (1) to display Main Menu screen (3).
2. Rotate selector knob (2) to highlight Setting Menu (4).
3. Press selector knob (2) to display Setting Menu screen (5).
4. Rotate selector knob (2) to highlight Date and Time (6).

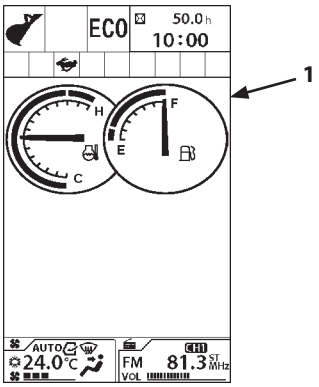

MDAA-01-001EN

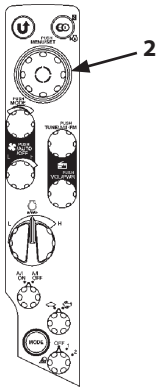

MDCD-01-026

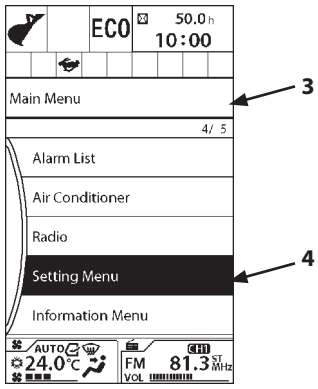

MDED-01-114EN

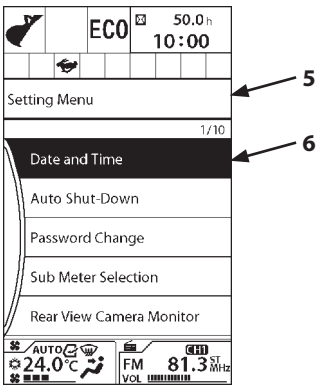

MDED-01-115EN

5. Press selector knob (2) to display Date and Time screen (7).

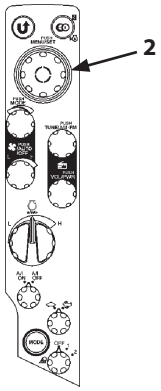

MDCD-01-026

6. Rotate selector knob (2) to highlight Time Setting (8).
7. Press selector knob (2) to display Time Setting screen (9).

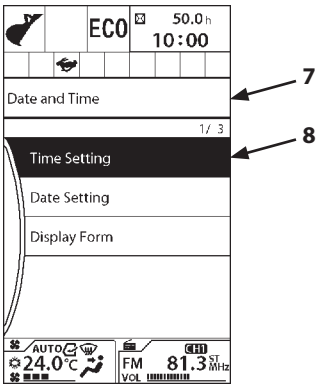

MDAA-01-117EN

8. Rotate selector knob (2) to highlight Hour or Minute and push selector knob (2).
9. Rotate selector knob (2) to adjust the clock. Rotate clockwise to adjust the number upwards, and counterclockwise to decrease it..
10. Push selector knob (2) to end the Time setting procedure.
11. Rotate selector knob (2) to highlight ✔ (11). Push selector knob (2) to make the change.

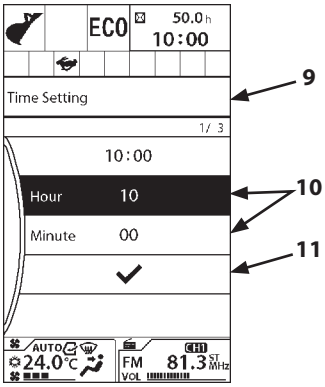

MDAA-01-118EN

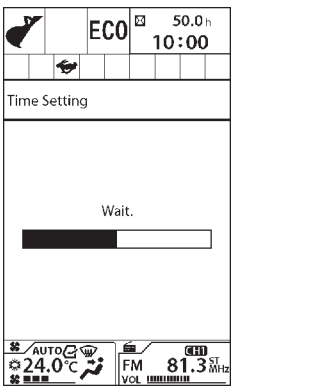

MDAA-01-121EN

Date Adjustment

1. Press selector knob (2) while displaying Basic Screen (1) to display Main Menu screen (3).
2. Rotate selector knob (2) to highlight Setting Menu (4).
3. Press selector knob (2) to display Setting Menu screen (5).
4. Rotate selector knob (2) to highlight Date and Time (6).

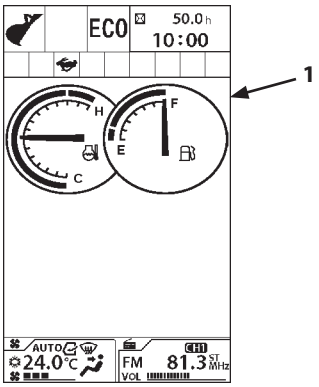

MDAA-01-001EN

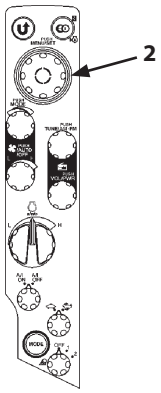

MDCD-01-026

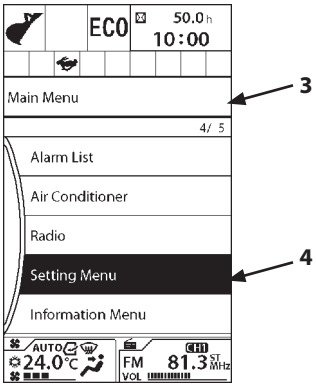

MDED-01-114EN

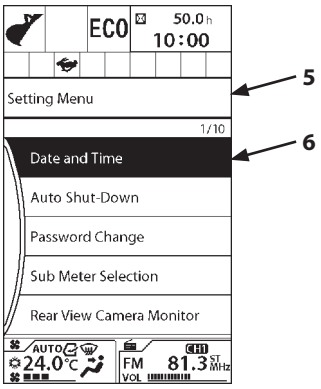

MDED-01-115EN

5. Press selector knob (2) to display Date and Time screen (7).

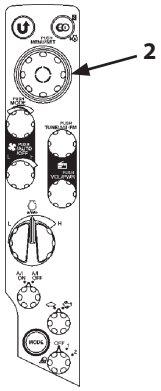

MDCD-01-026

6. Rotate selector knob (2) to highlight Date Setting (8).
7. Press selector knob (2) to display Date Setting screen (9).

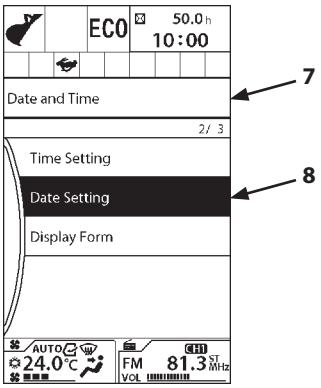

MDAA-01-122EN

8. Rotate selector knob (2) to highlight Year, Month or Day and push selector knob (2).
9. Rotate selector knob (2) to adjust the clock. Rotate clockwise to adjust the number upwards, and counterclockwise to decrease it.
10. Push selector knob (2) to end the date setting procedure.
11. Rotate selector knob (2) to highlight ✔ (11). Push selector knob (2) to make the change.

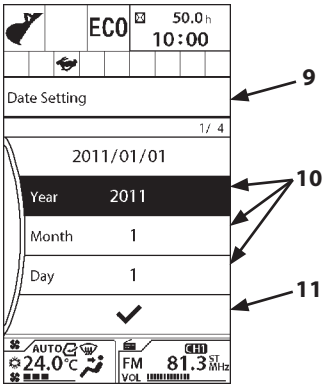

MDAA-01-123EN

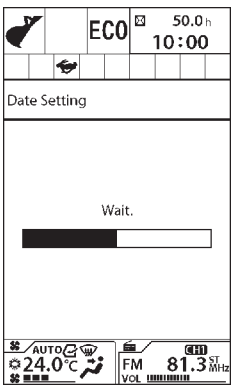

MDAA-01-127EN

Display Mode Setting

1. Press selector knob (2) while displaying Basic Screen (1) to display Main Menu screen (3).
2. Rotate selector knob (2) to highlight Setting Menu (4).
3. Press selector knob (2) to display Setting Menu screen (5).
4. Rotate selector knob (2) to highlight Date and Time (6).

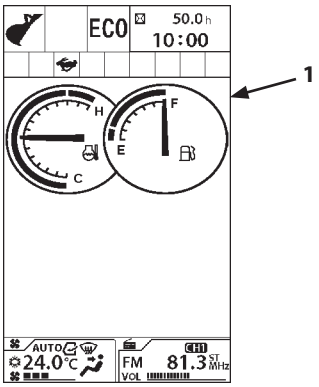

MDAA-01-001EN

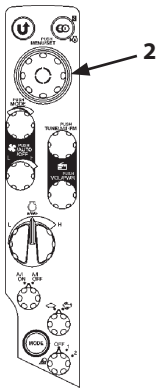

MDCD-01-026

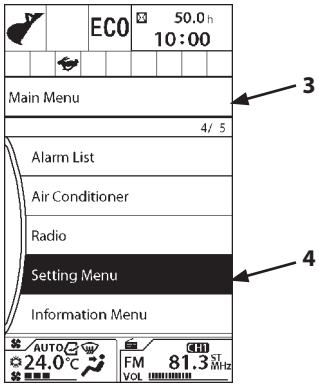

MDED-01-114EN

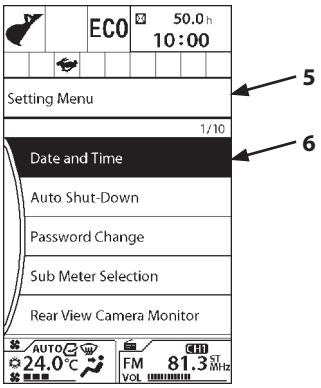

MDED-01-115EN

5. Press selector knob (2) to display Date and Time screen (7).

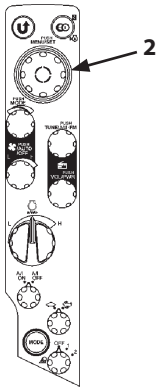

MDCD-01-026

6. Rotate selector knob (2) to highlight Display Form (8).

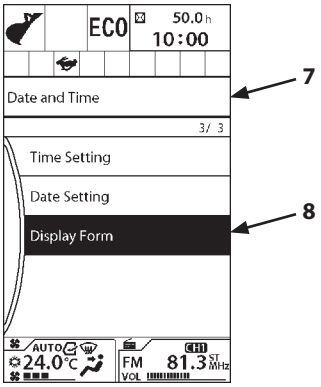

MDAA-01-228EN

7. Press selector knob (2) to display Display Form screen (9).
8. Rotate selector knob (2) to highlight Date (10) and push selector knob (2).

   Time : Each time selector knob (2) is pushed, the time format is changed as follows: 12 h → 24 h → 12 h.

   Date : Each time selector knob (2) is pushed, the date format is changed as follows: YYYY/MM/DD → MM/DD/YYYY → DD/MM/YYYY → YYYY/MM/DD.

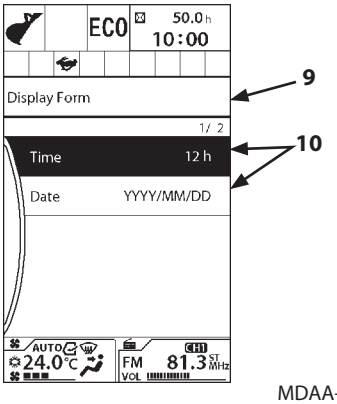

MDAA-01-229EN



MDAA-01-230EN



MDAA-01-231EN



MDAA-01-232EN



MDAA-01-233EN



MDAA-01-234EN

Auto Shut-Down

WARNING: This function automatically stops the engine. Take extra care on the work and work environment when using this function.

The auto shut-down function can be set in this screen. Set the auto shut-down time and enable (ON) the function beforehand. The engine automatically stops after the preset time at the state in which the pilot control shut-off lever is pulled. 30 seconds before the engine stop, the monitor displays a message that engine will be stopped and the indicator starts flashing. The buzzer also sounds. The buzzer sounds once at 30 seconds before, continuously sounds from 15 seconds. The engine speed decreases to the idling speed, and then stops after 15 seconds. When the pilot control shut-off lever is pushed before stopping the engine, the auto shut-down is disabled and the engine will not stop.

IMPORTANT: When the engine stops by the auto shut-down function, turn the key switch to ACC or OFF once and then turn it to START to restart the engine. Turn the key switch OFF after auto shut-down when leaving the machine for long period of time. Do not leave the machine after auto shut-down. Failure to do so may discharge the batteries.

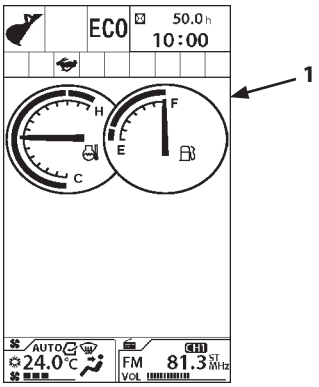

MDAA-01-001EN

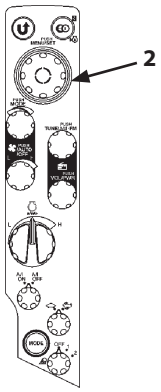

MDCD-01-026

Auto Shut-Down: ON/OFF

1. Press selector knob (2) while displaying Basic Screen (1) to display Main Menu screen (3).
2. Rotate selector knob (2) to highlight Setting Menu (4).
3. Press selector knob (2) to display Setting Menu screen (5).
4. Rotate selector knob (2) to highlight Auto Shut-Down (6).

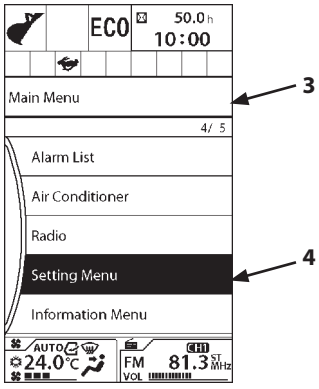

MDED-01-114EN

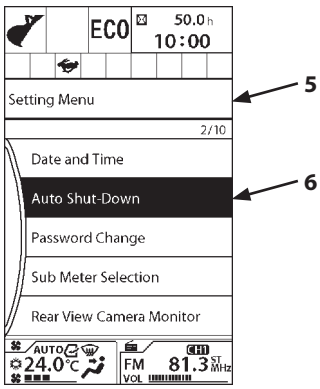

MDED-01-147EN

5. Press selector knob (2) to display Auto Shut-Down screen (7).

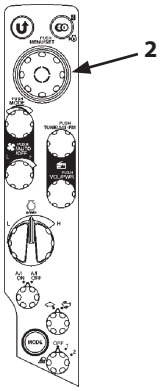

MDCD-01-026

6. Rotate selector knob (2) to highlight ON (8).
7. Press selector knob (2) to set the auto shut-down function ON. Press selector knob (2) again to turn the auto shut-down function OFF.

NOTE: When the function is ON, the mark "■" is displayed in green. When the function is OFF, the mark "■" is displayed in gray.

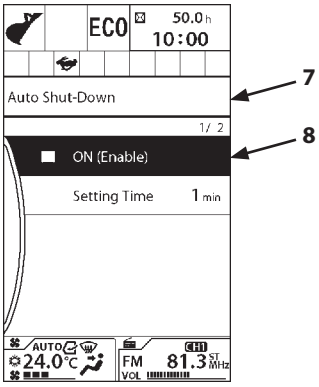

MDAA-01-148EN

Acting Time Setting

1. On the Auto Shut-Down screen, rotate selector knob (2) to highlight Setting Time (9) and push selector knob (2).
2. Rotate selector knob (2) to adjust Auto Shut-Down acting time.
3. Press selector knob (2) to make the change.

NOTE: 30 seconds before the engine stops, the monitor will display "Engine Shut-Down Soon." message (10).

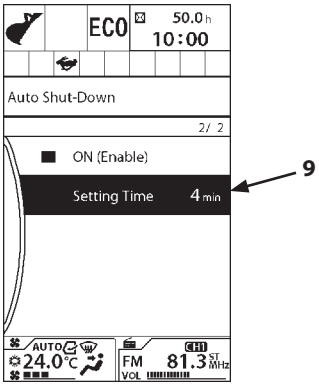

MDAA-01-150EN

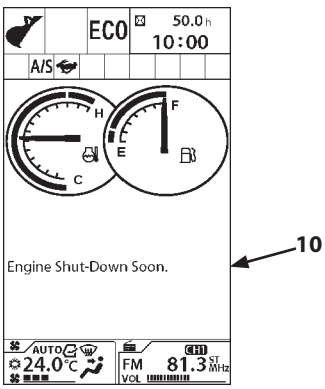

MDAA-01-146EN

Password Change (Optional)

1. Press selector knob (2) while displaying Basic Screen (1) to display Main Menu screen (3).

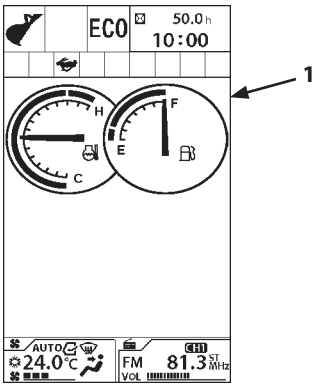

MDAA-01-001EN

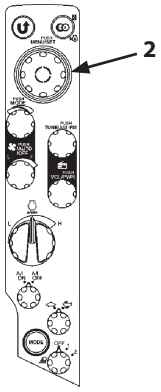

MDCD-01-026

2. Rotate selector knob (2) to highlight Setting Menu (4).

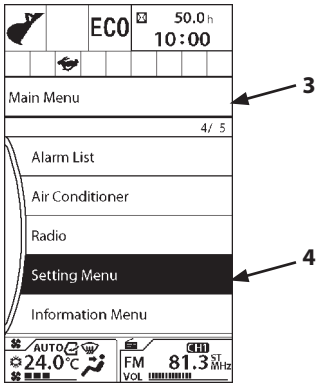

MDED-01-114EN

3. Press selector knob (2) to display Setting Menu screen (5).
4. Rotate selector knob (2) to highlight Password Change (6).

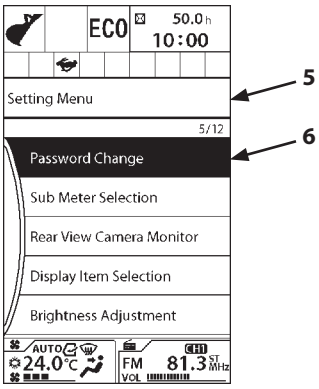

MDAA-01-156EN

5. Press selector knob (2) to display Password Change screen (7).

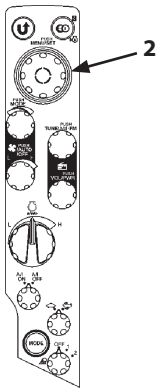

MDCD-01-026

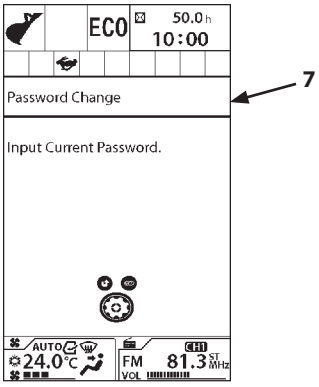

MDAA-01-157EN

6. Input current password from the numeric keypad.

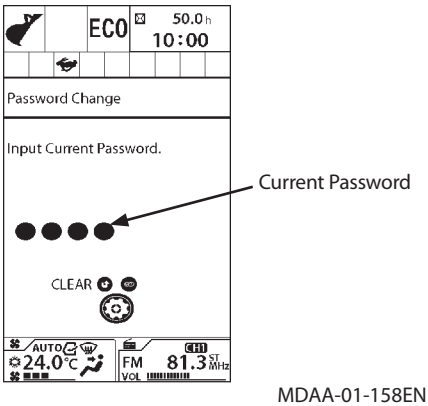

MDAA-01-158EN

7. Input the new password and push selector knob (2). 3 to 8 digits can be input for password.

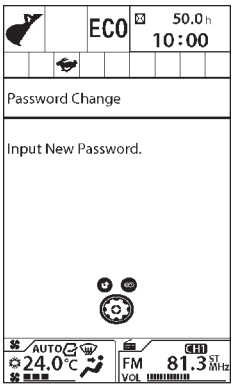

MDAA-01-159EN

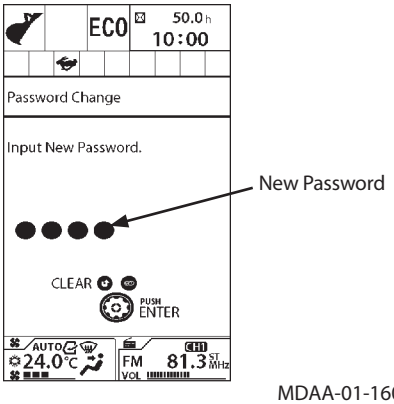

MDAA-01-160EN

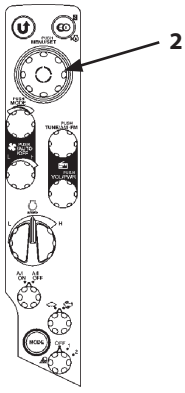

MDCD-01-026

8. Input the new password again to confirm it and push selector knob (2).

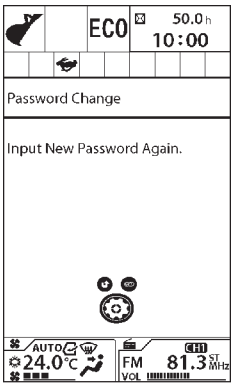

MDAA-01-161EN

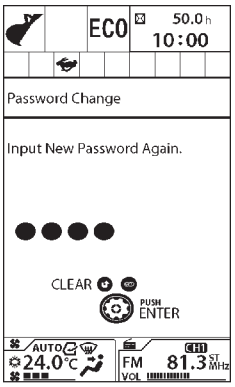

MDAA-01-162EN

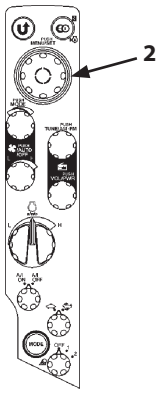

MDCD-01-026

9. The password has changed.

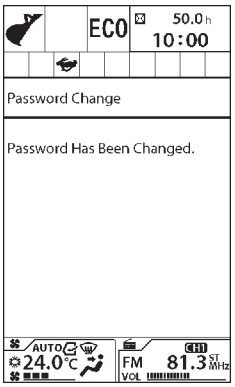

MDAA-01-163EN

Rear View Camera Monitor

IMPORTANT: The image displayed on the rear view monitor is meant only as an aid. Actual position and distance of people and objects in the rear view monitor will be different. When operating the machine, pay thorough attention to the surrounding situation.

Rear View Camera ON/OFF

1. Press selector knob (2) while displaying Basic Screen (1) to display Main Menu screen (3).
2. Rotate selector knob (2) to highlight Setting Menu (4).
3. Press selector knob (2) to display Setting Menu screen (5).
4. Rotate selector knob (2) to highlight Rear View Camera Monitor (6).

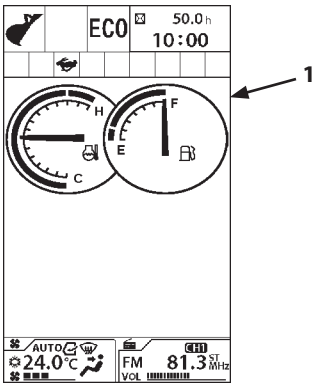

MDAA-01-001EN

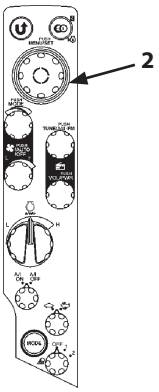

MDCD-01-026

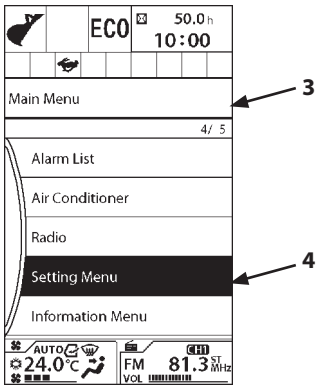

MDED-01-114EN

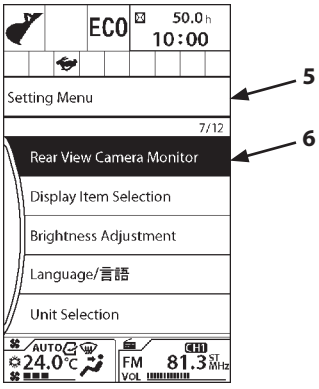

MDAA-01-168EN

5. Press selector knob (2) to display Rear View Camera Monitor screen (7).

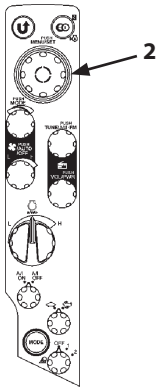

MDCD-01-026

6. Press selector knob (2) to turn the rear view camera monitor ON/OFF.
7. When the rear view camera monitor is ON, rear view image is continuously displayed on the basic screen.

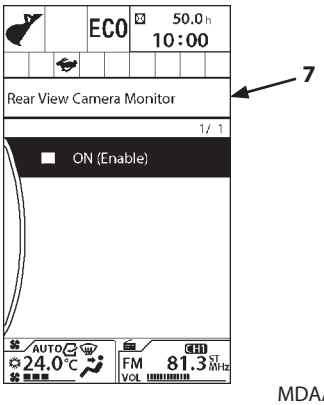

MDAA-01-169EN

IMPORTANT: In order to obtain a clear image, clean the lens and the monitor display before operating the machine.

NOTE: The monitor and camera lens surface is a resin product. Lightly wipe the surface with a wet clean cloth. Never use an organic solvent.

IMPORTANT:

- **Never attempt to change the mounting position of the rear view camera.**
- **Consult your authorized dealer if any abnormality is found on the rear view image.**

Brightness Adjustment

1. Press selector knob (2) while displaying Basic Screen (1) to display Main Menu screen (3).

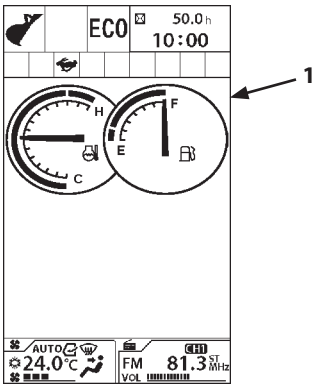

MDAA-01-001EN

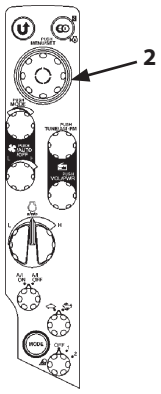

MDCD-01-026

2. Rotate selector knob (2) to highlight Setting Menu (4).

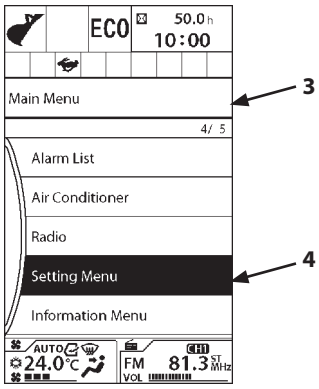

MDED-01-114EN

3. Press selector knob (2) to display Setting Menu screen (5).
4. Rotate selector knob (2) to highlight Brightness Adjustment (6).

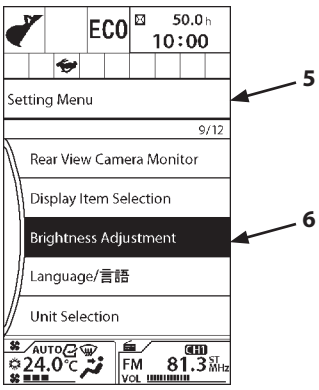

MDAA-01-171EN

5. Press selector knob (2) to display Brightness Adjustment screen (7).

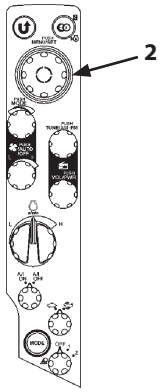

MDCD-01-026

6. Rotate selector knob (2) clockwise to make the screen brighter, counterclockwise to make the screen darker.

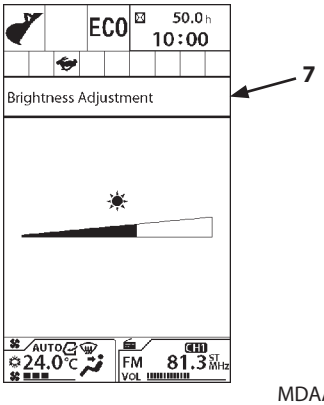

MDAA-01-172EN

NOTE: When the light is turned ON, the monitor screen changes to night mode and mark (8) is displayed. Brightness can be adjusted for day mode and night mode respectively.

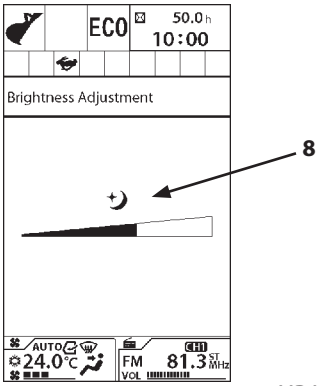

MDAA-01-173EN

NOTE: Even if the light is turned ON during daytime, you can activate the daytime screen by pushing "0" (9) on the numeric keypad.

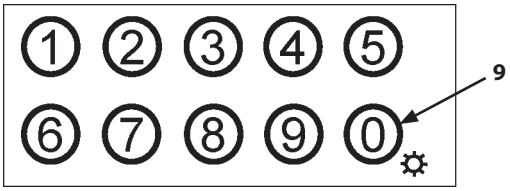

MDAA-01-018

Language Settings

1. Press selector knob (2) while displaying Basic Screen (1) to display Main Menu screen (3).

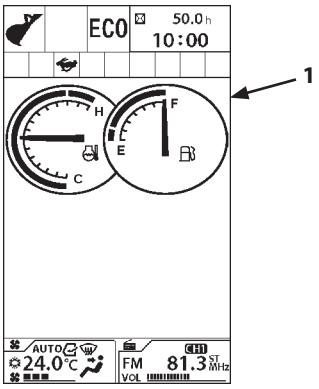

MDAA-01-001EN

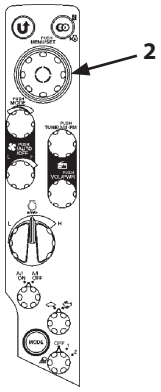

MDCD-01-026

2. Rotate selector knob (2) to highlight Setting Menu (4).

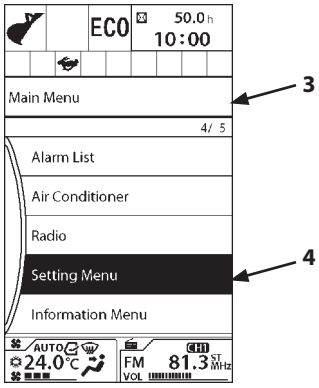

MDED-01-114EN

3. Press selector knob (2) to display Setting Menu screen (5).
4. Rotate selector knob (2) to highlight Language/言語 (6).

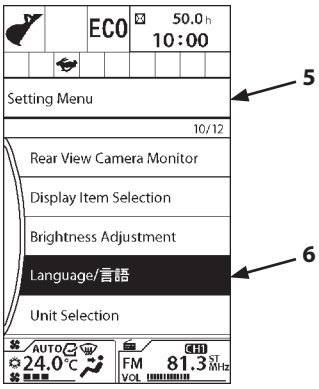

MDAA-01-176EN

5. Press selector knob (2) to display Language/言語 screen (7).

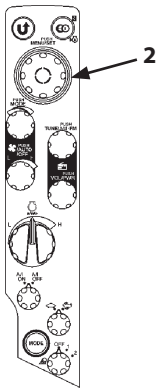

MDCD-01-026

6. Rotate selector knob (2) to highlight the desired language. Press selector knob (2) to make the change.

NOTE: When a display is selected, the mark "■" is displayed in green. When not selected, the mark "■" is displayed in gray.

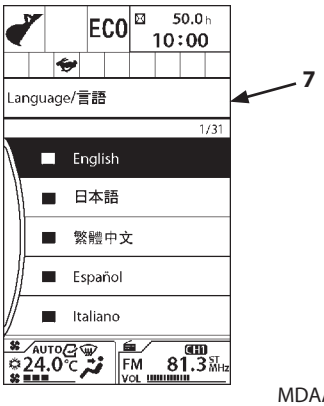

MDAA-01-177EN

Lists of Display Language

Language	Screen Display
Japanese	日本語
English	English
Spanish	Español
Italian	Italiano
French	Français
German	Deutsch
Dutch	Nederlands
Russian	Русский
Portuguese	Português
Finnish	Suomi
Greek	Ελληνικά
Swedish	Svenska
Norwegian	Norsk
Chinese (Simplified)	简体中文
Chinese (Traditional)	繁體中文
Korean	한국어

Language	Screen Display
Indonesian	Bahasa Indonesia
Thai	ภาษาไทย
Vietnamese	Tiếng Việt
Myanmarese	မြန်မာဘာသာ
Arabic	اللغة العربية
Persian	زبان فارسی
Turkish	Türkçe
Danish	Dansk
Esthonian	Eesti
Polish	Polski
Icelandic	Íslenska
Croatian	Hrvatski
Slovenian	Slovenščina
Romanian	limba română
Bulgarian	Български език
Lithuanian	Lietuvių kalba

Unit Selection

Unit system displayed on the monitor can be selected in this screen.

1. Press selector knob (2) while displaying Basic Screen (1) to display Main Menu screen (3).

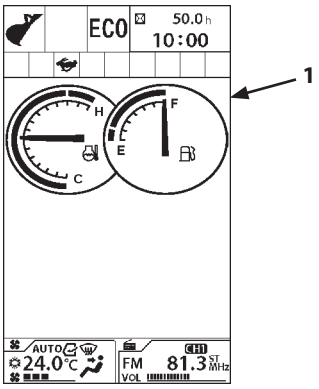

MDAA-01-001EN

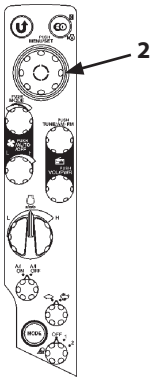

MDCD-01-026

2. Rotate selector knob (2) to highlight Setting Menu (4).

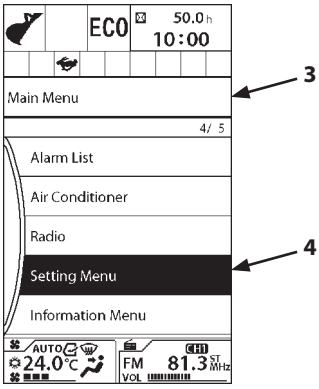

MDED-01-114EN

3. Press selector knob (2) to display Setting Menu screen (5).
4. Rotate selector knob (2) to highlight Unit Selection (6).

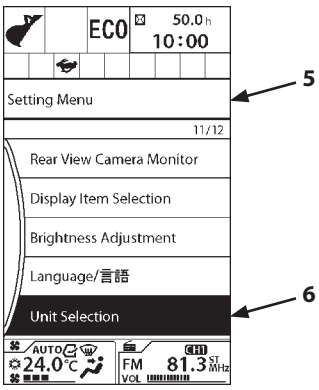

MDAA-01-181EN

5. Press selector knob (2) to display Unit Selection screen (7).

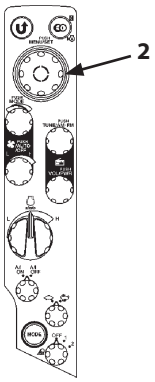

MDCD-01-026

6. Rotate selector knob (2) to highlight desired unit system. Press selector knob (2) to set the unit (Metric or US system).

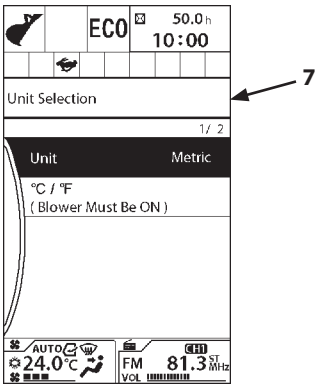

MDAA-01-182EN

7. Before changing °C and °F, turn the blower of the air conditioner ON.

   Rotate selector knob (2) to highlight desired unit system (°C or °F). Press selector knob (2) to set the unit.

   When pressing selector knob (2), "Wait." will be will be displayed and then the change will be completed.

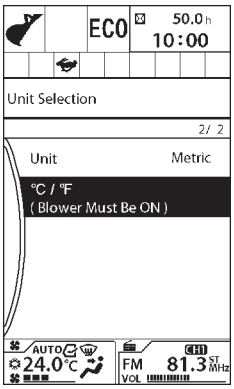

MDAA-01-183EN

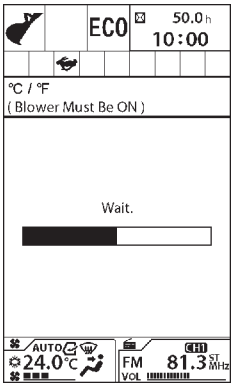

MDAA-01-184EN

Display Item Selection (Rear View Camera OFF)

The display under the meters can be set to OFF (disable), Logo or Operational information.

1. Press selector knob (2) while displaying Basic Screen (1) to display Main Menu screen (3).

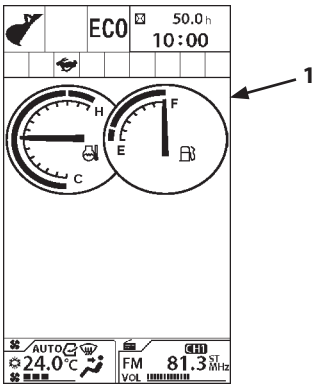

MDAA-01-001EN

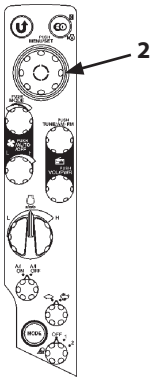

MDCD-01-026

2. Rotate selector knob (2) to highlight Setting Menu (4).

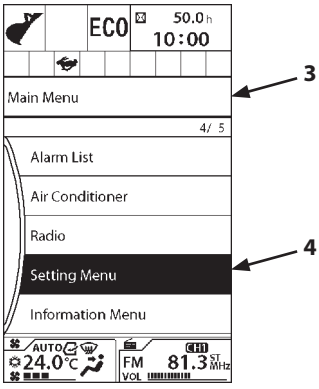

MDED-01-114EN

3. Press selector knob (2) to display Setting Menu screen (5).
4. Rotate selector knob (2) to highlight Display Item Selection (6).

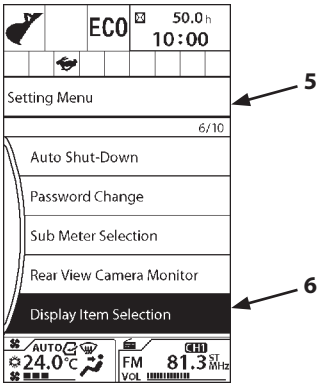

MDED-01-237EN

5. Press selector knob (2) to display Display Item Selection screen (7).

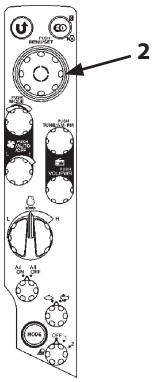

MDCD-01-026

6. Rotate selector knob (2) to highlight desired display (8). Press selector knob (2) to set the image. (Selecting OFF sets non-display.)

NOTE: When a display is selected, the mark "■" is displayed in green. When not selected, the mark "■" is displayed in gray.

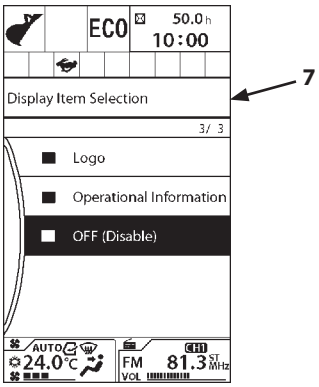

MDAA-01-238EN

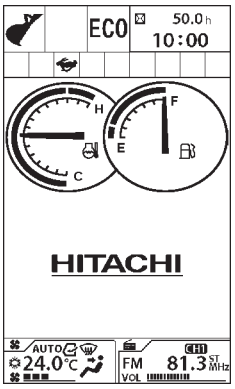

Logo

MDAA-01-239EN

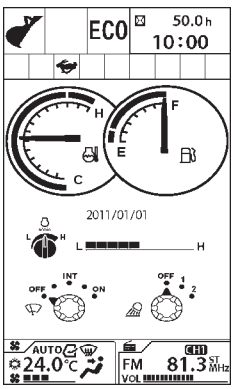

Operation Information

MDAA-01-222EN

Main Menu Sequence Change

Menu sequence of Air Conditioner, Radio, Work Mode and Mail can be changed in this screen. Frequently used menu can be located on top of the screen.

1. Press selector knob (2) while displaying Basic Screen (1) to display Main Menu screen (3).

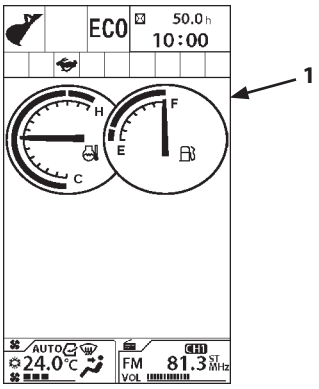

MDAA-01-001EN

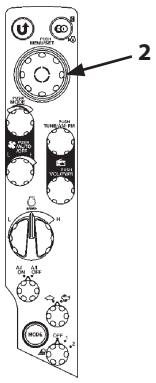

MDCD-01-026

2. Rotate selector knob (2) to highlight Setting Menu (4).

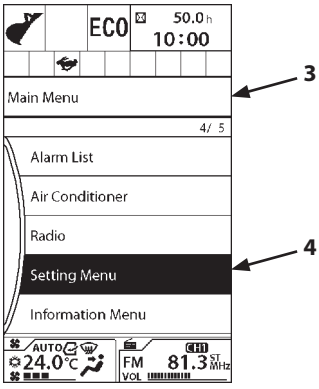

MDED-01-114EN

3. Press selector knob (2) to display Setting Menu screen (5).
4. Rotate selector knob (2) to highlight Main Menu Sequence Change (6).

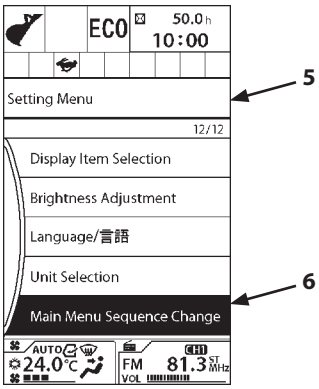

MDAA-01-186EN

5. Press selector knob (2) to display Main Menu Sequence Change screen (7).

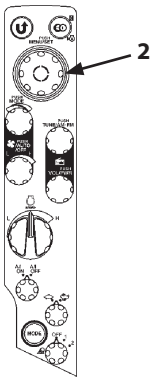

MDCD-01-026

6. Rotate selector knob (2) to highlight a menu to be on the top of the screen. Press selector knob (2) to set the menu to the top of the screen.

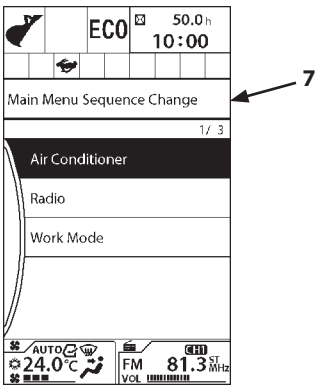

MDAA-01-187EN

Information Menu

The information menu includes Operation, Maintenance and Monitoring.

1. Press selector knob (2) while displaying Basic Screen (1) to display Main Menu screen (3).
2. Rotate selector knob (2) to highlight Information Menu (4).
3. Press selector knob (2) to display Information Menu screen (5).

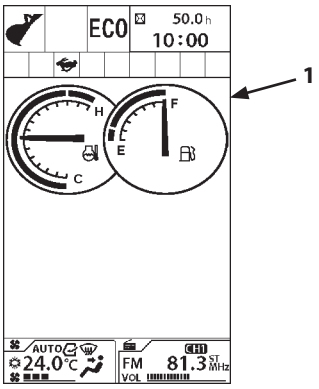

MDAA-01-001EN

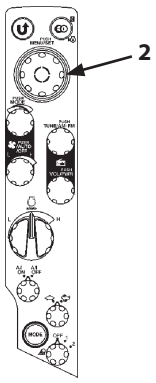

MDCD-01-026

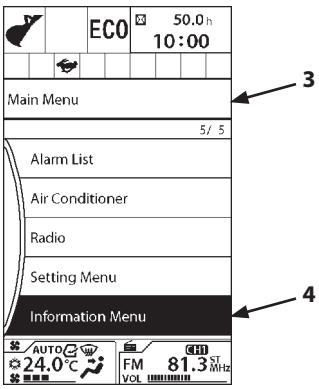

MDED-01-190EN

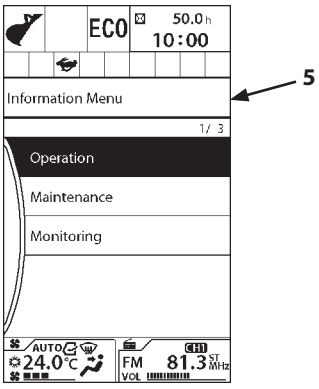

MDAA-01-191EN

Operation

The Operation screen displays Machine Operation Hours, Attachment Operation, Travel Operation, and Actual Operation menu. The Machine Operation Hours screen displays machine operation hours from resetting the monitoring unit. The Attachment Operation screen displays total operating hours of front attachment, travel and all operation from resetting the monitoring unit.

Machine Operation Hours

1. Press selector knob (2) while displaying Basic Screen (1) to display Main Menu screen (3).
2. Rotate selector knob (2) to highlight Information Menu (4).
3. Press selector knob (2) to display Information Menu screen (5).
4. Rotate selector knob (2) to highlight Operation (6).

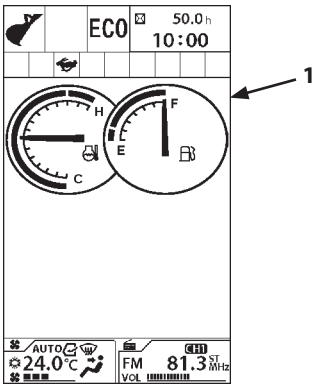

MDAA-01-001EN

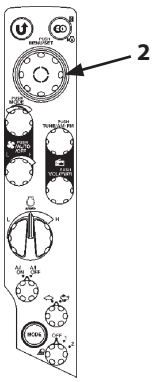

MDCD-01-026

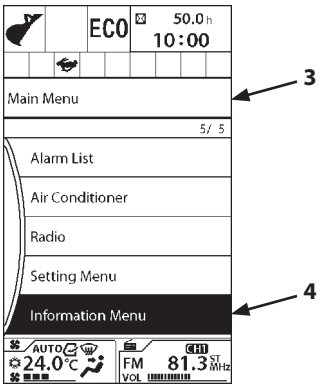

MDED-01-190EN

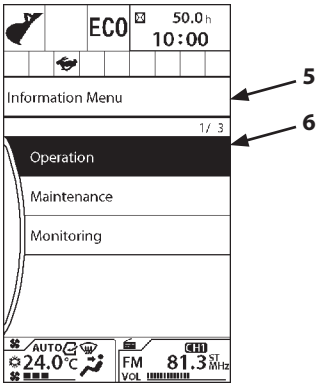

MDAA-01-191EN

5. Press selector knob (2) to display Operation screen (7).

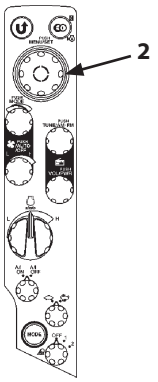

MDCD-01-026

6. Rotate selector knob (2) to highlight Machine Operation Hours (8).
7. Press selector knob (2) to display Machine Operation Hours screen.

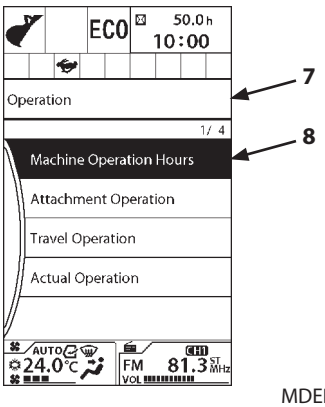

MDEB-01-193EN

The Machine Operation Hours can be checked on this screen.
Pushing selector knob (2) returns to the basic screen. To clear the Machine Operation Hours, rotate selector knob (2) to highlight CLEAR, and then push selector knob (2).

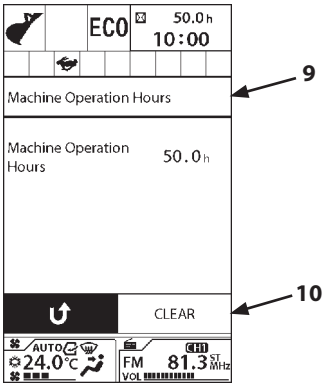

MDEB-01-194EN

Attachment Operation (Optional)

IMPORTANT: When required to activate the attachment operation, consult your nearest Hitachi dealer.

1. Press selector knob (2) while displaying Basic Screen (1) to display Main Menu screen (3).
2. Rotate selector knob (2) to highlight Information Menu (4).
3. Press selector knob (2) to display Information Menu screen (5).
4. Rotate selector knob (2) to highlight Operation (6).

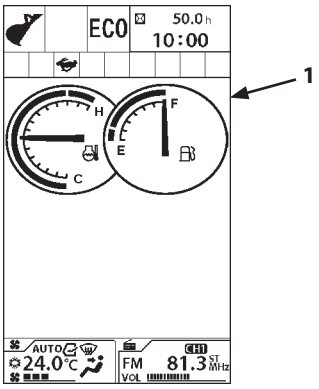

MDAA-01-001EN

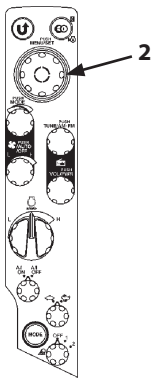

MDCD-01-026

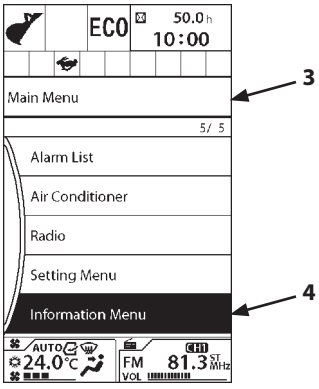

MDED-01-190EN

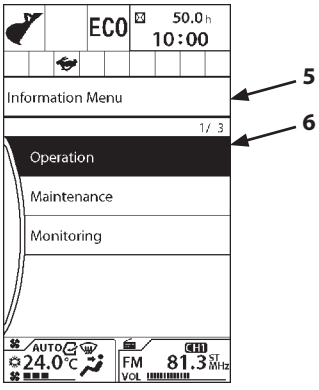

MDAA-01-191EN

5. Press selector knob (2) to display operation screen (7).

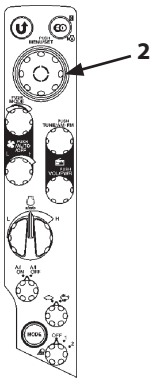

MDCD-01-026

6. Rotate selector knob (2) to highlight Attachment Operation (8).

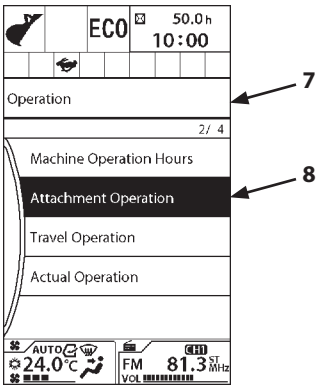

MDEB-01-199EN

7. Press selector knob (2) to display Attachment Operation screen (9).

The attachment Operating Time can be checked in this screen.
Push selector knob (2) to return the previous screen. To reset the Operating Time data, rotate selector knob (2) to highlight CLEAR (10), and then push selector knob (2).

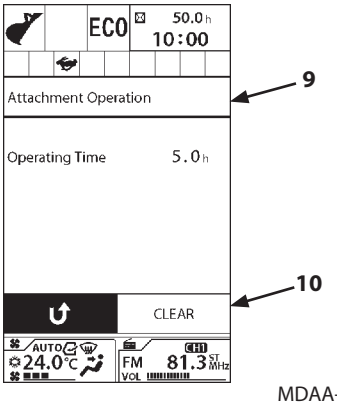

MDAA-01-200EN

Travel Operation

1. Press selector knob (2) while displaying Basic Screen (1) to display Main Menu screen (3).
2. Rotate selector knob (2) to highlight Information Menu (4).
3. Press selector knob (2) to display Information Menu screen (5).
4. Rotate selector knob (2) to highlight Operation (6).

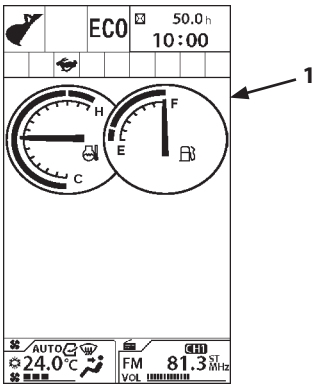

MDAA-01-001EN

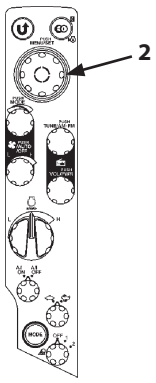

MDCD-01-026

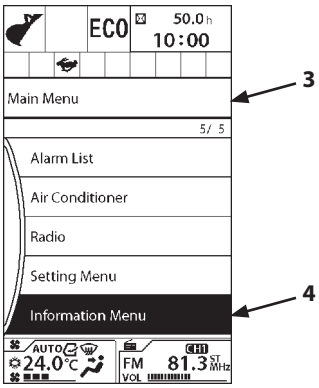

MDED-01-190EN

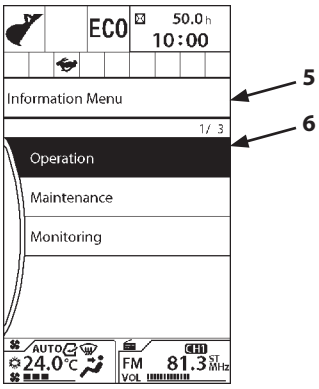

MDAA-01-191EN

5. Press selector knob (2) to display operation screen (7).

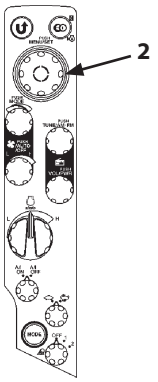

MDCD-01-026

6. Rotate selector knob (2) to highlight Travel Operation (8).
7. Press selector knob (2) to display Travel Operation screen (9).

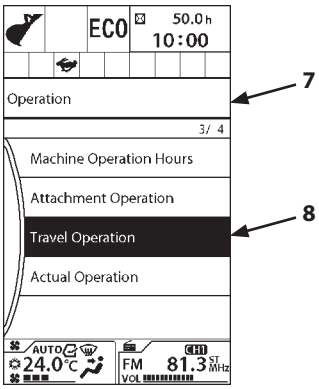

MDEB-01-202EN

Total Travel Operation Time can be checked in this screen. Push selector knob (2) to return the previous screen. To reset the Operating Time data, rotate selector knob (2) to highlight CLEAR (10), and then push selector knob (2).

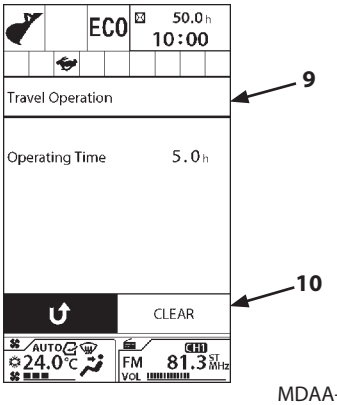

MDAA-01-203EN

Actual operation

1. Press selector knob (2) while displaying Basic Screen (1) to display Main Menu screen (3).
2. Rotate selector knob (2) to highlight Information Menu (4).
3. Press selector knob (2) to display Information Menu screen (5).
4. Rotate selector knob (2) to highlight Operation (6).

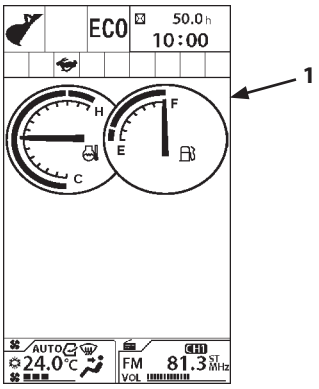

MDAA-01-001EN

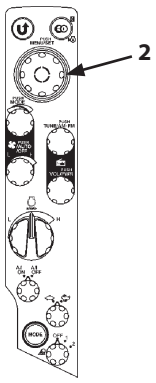

MDCD-01-026

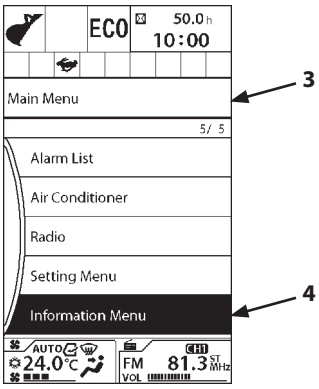

MDED-01-190EN

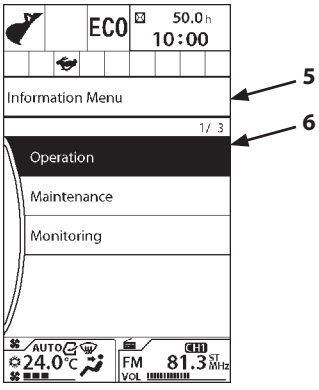

MDAA-01-191EN

5. Press selector knob (2) to display operation screen (7).

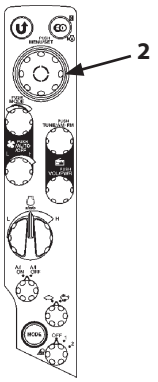

MDCD-01-026

6. Rotate selector knob (2) to highlight Actual Operation (8).
7. Press selector knob (2) to display Actual Operation screen (9).

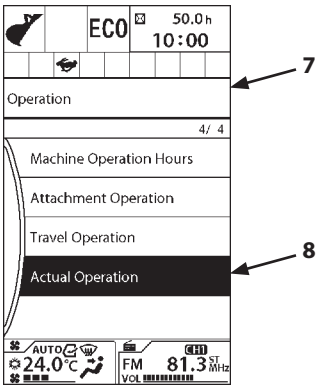

MDEB-01-205EN

The actual Operating Time can be checked in this screen. Push selector knob (2) to return the previous screen. To reset the Operating Time data, rotate selector knob (2) to highlight CLEAR (10), and then push selector knob (2).

NOTE: The Operating Time includes travel operation hours as well as all other operations.

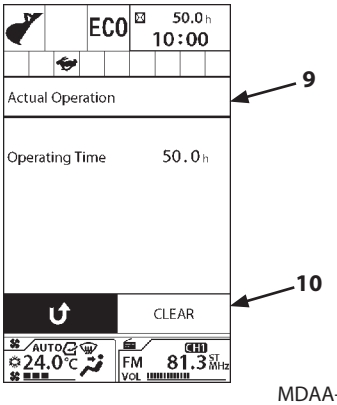

MDAA-01-206EN

Maintenance

The maintenance screen includes maintenance notice, remaining hours until the next maintenance, and maintenance intervals.

Maintenance Items
- Engine Oil
- Engine Oil Filter
- Hydraulic Oil
- Hydraulic Oil Pilot Filter
- Hydraulic Oil Full-Flow Filter
- Travel Device Oil
- Swing Drain Filter
- Swing Bearing Grease
- Air Cleaner Filter
- Fuel Filter Change
- Air Conditioner Filter
- Water Separator
- User Setting 1
- User Setting 2

Maintenance Notice

1. Press selector knob (2) while displaying Basic Screen (1) to display Main Menu screen (3).
2. Rotate selector knob (2) to highlight Information Menu (4).
3. Press selector knob (2) to display Information Menu screen (5).
4. Rotate selector knob (2) to highlight Maintenance (6).

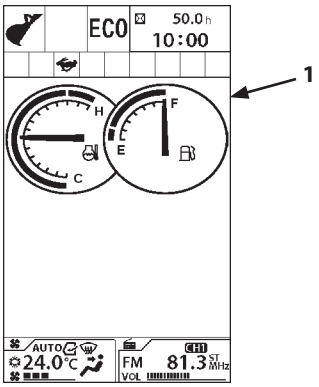

MDAA-01-001EN

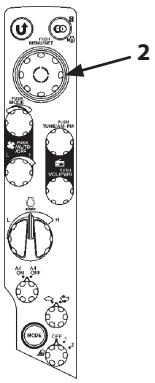

MDCD-01-026

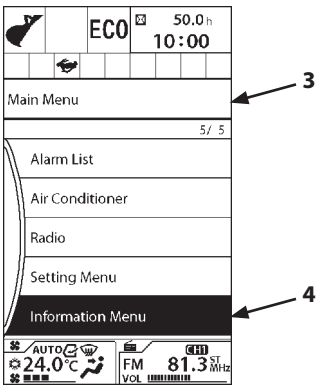

MDED-01-190EN

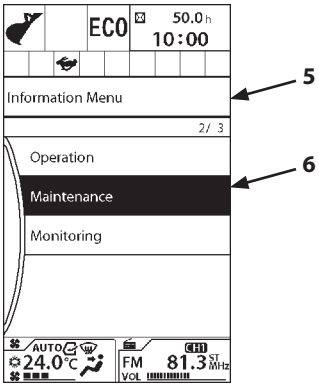

MDAA-01-223EN

5. Press selector knob (2) to display Maintenance screen (7).

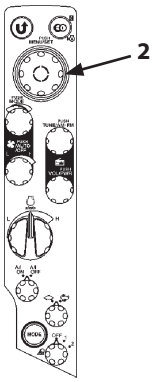

MDCD-01-026

6. Rotate selector knob (2) to highlight Maintenance Notice (8).
7. Press selector knob (2) to turn the Maintenance Notice ON. Press selector knob (2) again to turn the Maintenance Notice OFF.

   ON : When the required interval is reached, an information message is displayed on the screen.
   OFF : No notification message is displayed.

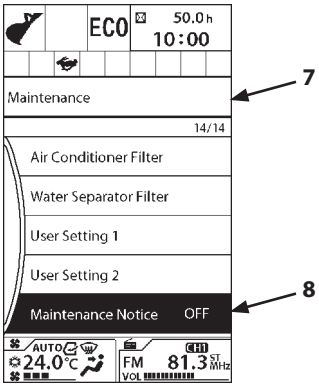

MDED-01-208EN

NOTE: When the required interval for an item is reached, screen (9) is displayed for 10 seconds when the key is switched ON. Press Return button to delete the notification. When checking the maintenance items from the menu, an item where the set time has been reached are marked with a spanner (10).

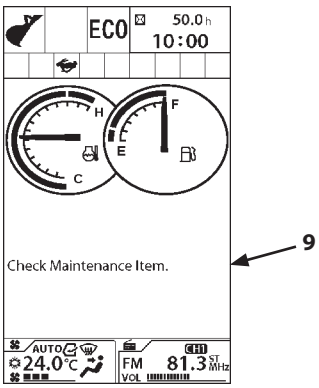

MDAA-01-213EN

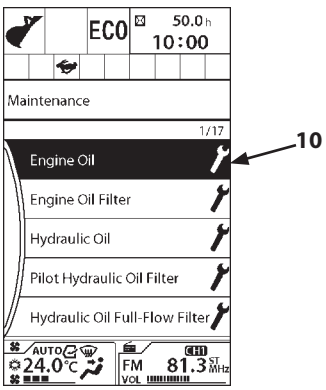

MDAA-01-214EN

Time Remains and Maintenance Interval

1. Press selector knob (2) while displaying Basic Screen (1) to display Main Menu screen (3).
2. Rotate selector knob (2) to highlight Information Menu (4).
3. Press selector knob (2) to display Information Menu screen (5).
4. Rotate selector knob (2) to highlight Maintenance (6).

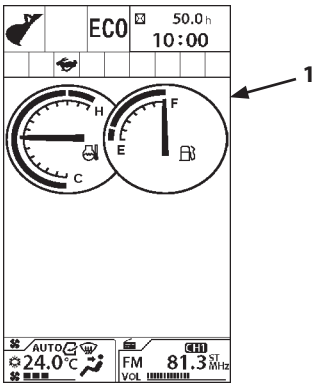

MDAA-01-001EN

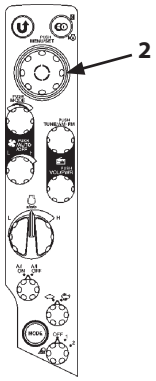

MDCD-01-026

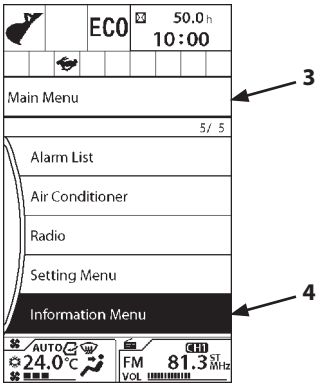

MDED-01-190EN

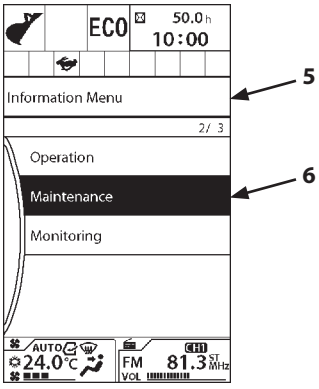

MDAA-01-223EN

5. Press selector knob (2) to display Maintenance screen (7).

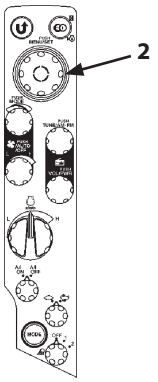

MDCD-01-026

6. Rotate selector knob (2) to highlight a maintenance item to be checked (8). (In the right example, Engine Oil is selected.)
7. Press selector knob (2) to display the time remaining for the selected maintenance item.

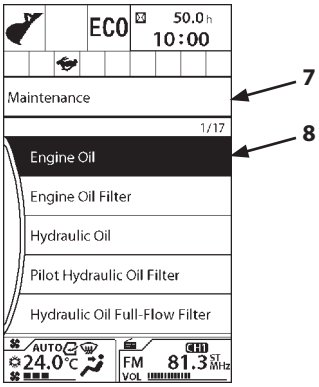

MDAA-01-336EN

Resetting Data

To reset the remaining time data, rotate selector knob (2) to highlight RESET (9), and then push selector knob (2). The value of the remaining hours is reset to that of the change interval. The previous change date/hour is updated with the current date and time.

Maintenance Interval Setting

To change the maintenance interval, rotate selector knob (2) to highlight (11), and then press selector knob (2). The background color of Maintenance Interval (10) changes, then turn selector knob (2) to adjust the time, and then push selector knob (2) to enable the change.

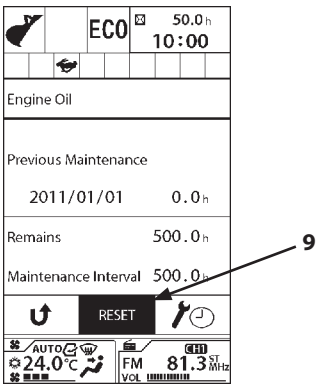

MDAA-01-210EN

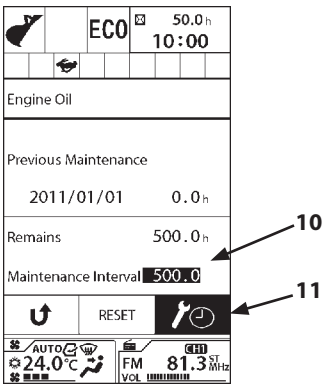

MDAA-01-212EN

Monitoring

Engine speed can be checked in this screen.

1. Press selector knob (2) while displaying Basic Screen (1) to display Main Menu screen (3).
2. Rotate selector knob (2) to highlight Information Menu (4).
3. Press selector knob (2) to display Information Menu screen (5).
4. Rotate selector knob (2) to highlight Monitoring (6).

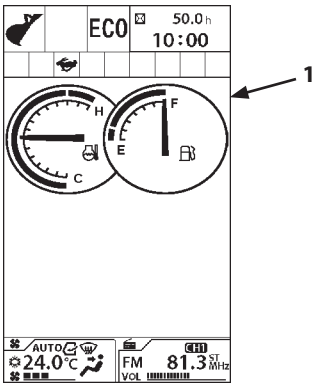

MDAA-01-001EN

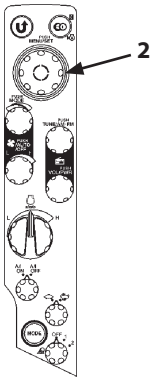

MDCD-01-026

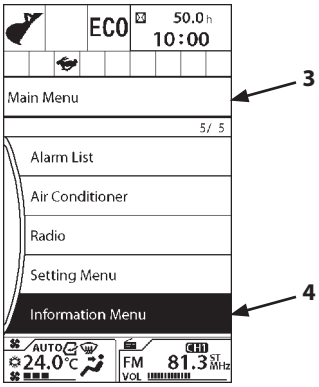

MDED-01-190EN

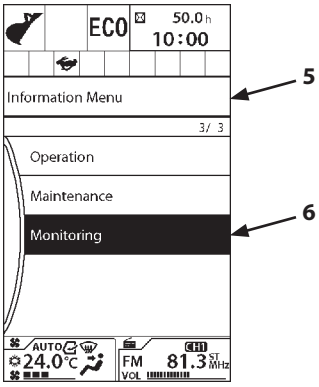

MDAA-01-220EN

5. Press selector knob (2) to display Monitoring screen (7).

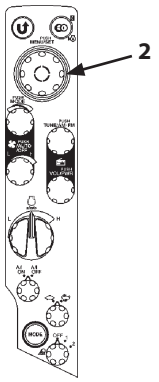

MDCD-01-026

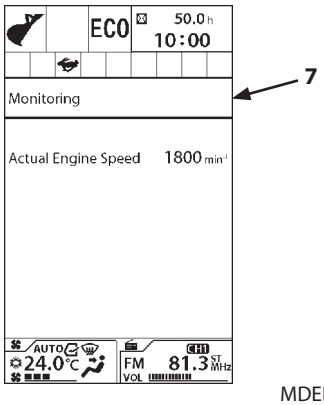

MDED-01-221EN

Switch Panel

1- Return to Previous Screen
2- Return to Basic Screen
3- Selector Knob
4- Temperature Control Switch/Mode Switch
5- AUTO/OFF Switch/Fan Switch
6- AM/FM Selector/Tuning Switch
7- Power Switch/Volume Control Knob
8- Engine Control Dial
9- Auto-Idle Switch
10- Travel Mode Switch
11- Power Mode Switch
12- Work Light Switch
13- Wiper/Washer Switch
14- Numeric Keypad
15- Overhead Window Wiper/Washer Switch (ZX75US-5A) (Optional)

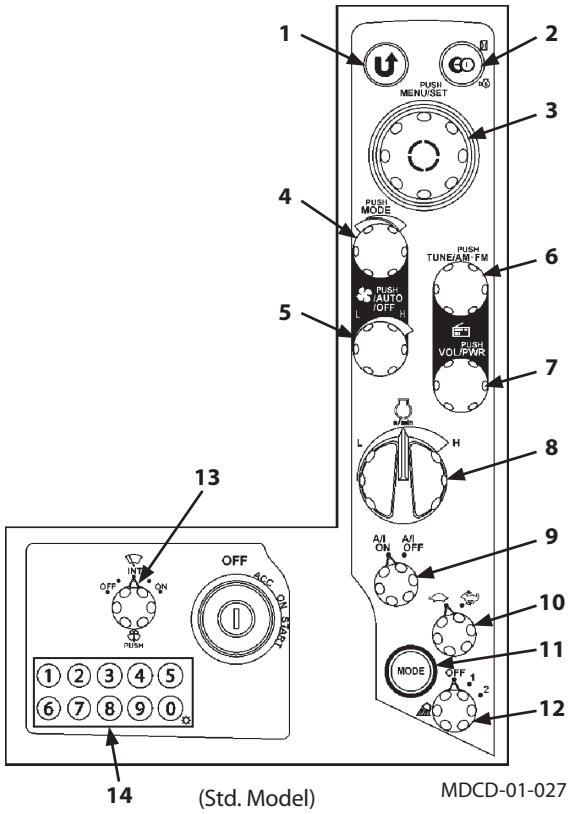

(Std. Model) MDCD-01-027

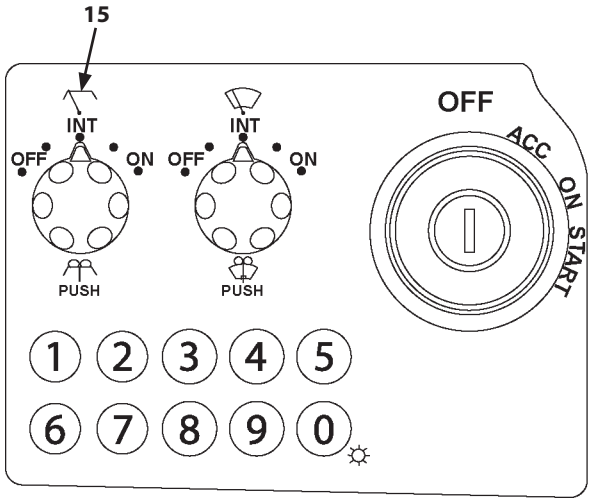

(Optional) MDAA-01-241

Return to Previous Screen (Monitor)

Push this switch to return to the previous screen.



MDAA-01-010

Return to Basic Screen (Monitor)

Allows any screen to return to the basic screen.



MDAA-01-011

Select/Confirm Switch (Monitor)

Push : Push this switch while the basic screen is displayed, the menu screen opens.
Push this switch after the menu screen, the action is confirmed.
Rotate : Cursor moves.

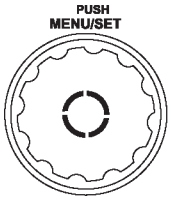

MDAA-01-012

Temperature Control Switch/Mode Switch (Air Conditioner)

Push : Air vent is selected.
Rotate : Setting the temperature.



MDAA-01-013

AUTO/OFF Switch/Fan Switch (Air Conditioner)

Push : Push this switch while the air conditioner OFF, it turns AUTO. Push this switch while operating the air conditioner, it turns OFF.
Rotate : Adjusting the blower speed.

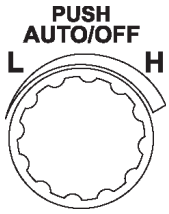

MDAA-01-015

AM/FM Selector/Tuning Switch (Radio)

Push : AM/FM is selected.
Rotate : Adjusting radio frequency.

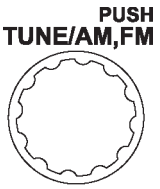

MDAA-01-014

Power Switch/Volume Control Knob (Radio)

Push : Push: Turns power ON/OFF.
Rotate : Adjusting the volume.

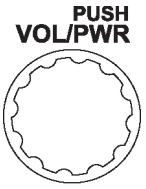

MDAA-01-016

Engine Control Dial

Use engine control dial (1) to adjust engine speed.

The fully clockwise position : Fast Idle
Counterclockwise : Slow Idle

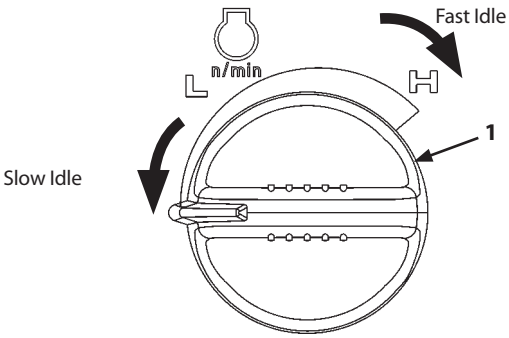

M1P1-01-068

Auto-Idle Switch

The auto-idle switch sets the engine speed control mode to either Auto-Idle ON or OFF.

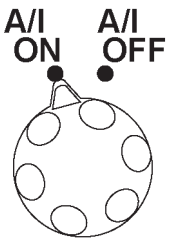

MDAA-01-017

- Auto-Idle Speed
  When auto-idle selector is turned to ON position, the engine speed decreases to the idle after approximately 4 seconds at the state in which the work lever is turned to neutral.
  This function saves fuel consumption.
  When the auto-idle mode is selected, auto-idle indicator (3) on the monitor panel lights.

NOTE: Auto-idle control may not work completely until the end of the warm-up.

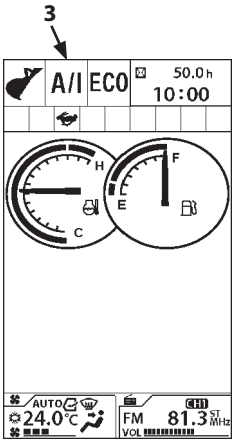

MDED-01-314EN

Travel Mode Switch

Two travel modes, FAST and SLOW, are selected by turning the travel mode switch to either position.

Mark (Fast Speed Mode)

Mark (Slow Speed Mode)

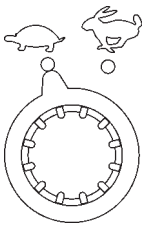

MDCD-01-028

Power Mode Switch

Two engine speed modes, ECO and PWR modes are selected by operating the power mode switch.



MDAA-01-274

- ECO (Economy) Mode
  Operate the machine in this mode when performing normal work.
  ECO is displayed on Power Mode Display (1).

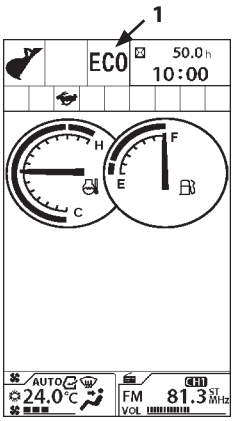

MDAA-01-001EN

- PWR (Power) Mode
  Use PWR (Power) mode when extra horsepower is needed.
  PWR is displayed on Power Mode Display (2).

NOTE: ECO mode is set automatically when starting the engine. Set PWR mode if necessary.

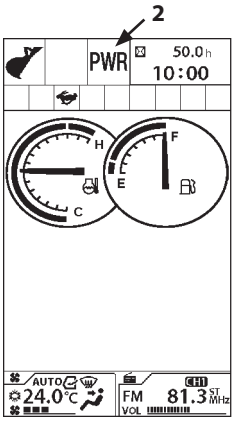

MDAA-01-353

Work Light Switch

Work light switch has the following positions.

1 Position : Work light (3) on the base machine will light. Also, the switch panel illumination will light.

2 Position : Work light (4) mounted on the boom and work light (3) on the right side of the machine will light. At the same time, the switch panel illumination will light. The monitor changes to night mode.

OFF : Work lights (3), (4), and the switch panel illumination will turn off.

NOTE: When the key switch is turned OFF while the work light switch is in 2-position, the light turns ON for 60 seconds.

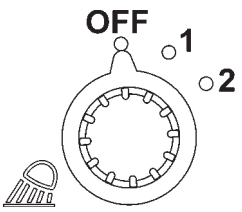

MDCD-01-029

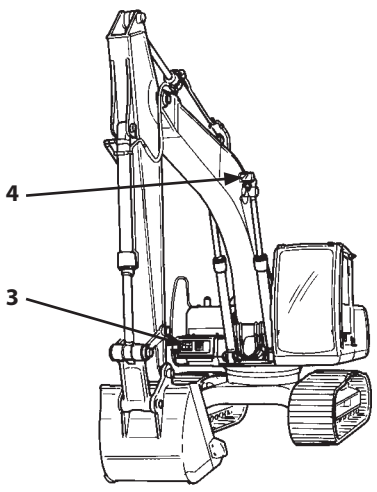

M157-01-146

Wiper/Washer Switch

The wiper and the window washer are operated using the wiper/washer switch.

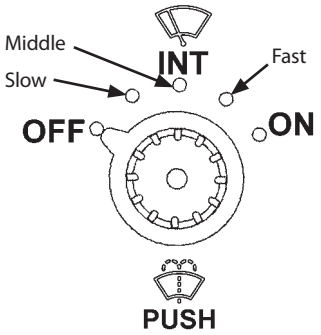

MBFM-01-005

- Wiper
  Turn the wiper/washer switch to the specified position to operate the wiper.

OFF	The wiper stops and is retracted.
INT Position	The wiper operates intermittently at the interval selected by the switch position as described below. INT has three positions of operating speed as shown below.
INT (Slow):	The wiper operates at 8-second interval.
INT (Mid):	The wiper operates at 6-second interval.
INT (Fast):	The wiper operates at 3-second interval.
ON	The wiper operates continuously.

NOTE: When the front window (upper) is opened, the wiper and washer will not operate. If the front window is opened while operating the wiper, the wiper stops.

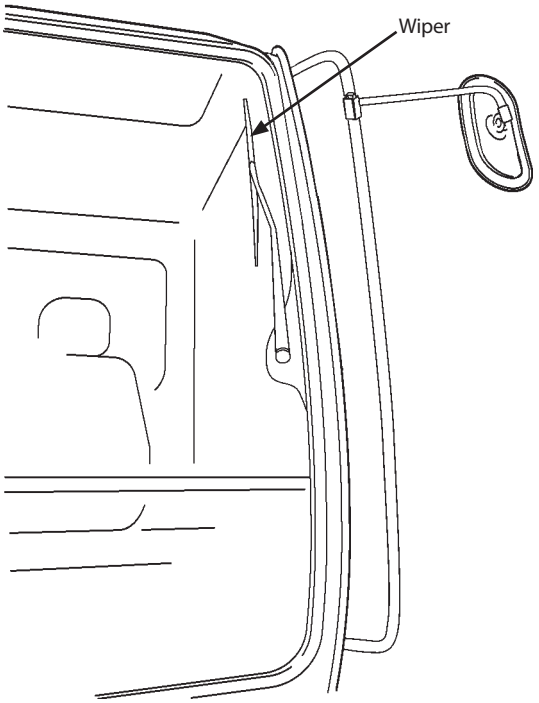

M1U1-01-018

- Washer
  Press and hold the wiper/washer switch to squirt washer fluid onto the front window. When the wiper/washer switch is pressed for more than 2 seconds, the wiper operates until the switch is released. When the wiper/washer switch is released, the wiper automatically retracts.
  While operating the wiper in the INT mode, when the wiper/washer switch is pressed, the wiper operation mode is changed to the continuous operation mode.

NOTE: The wiper motor protection control stops wiper operation to prevent it from becoming immovable when it operates long period of time under high load. When the wiper stops, do not change the arm position and wait several minutes until the wiper starts operation again.

Overhead Window Wiper and Washer Switch (ZX75US-5A) (Optional)

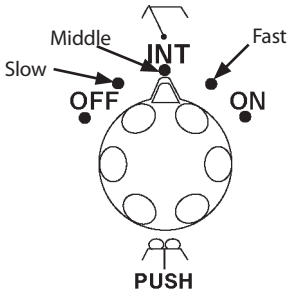

MDAA-01-275

- Wiper
  Turn the wiper/washer switch to the specified position to operate the wiper.

OFF	The wiper stops and is retracted.
INT Position	The wiper operates intermittently at the interval selected by the switch position as described below. INT has three positions of operating speed as shown below.
INT (Slow):	The wiper operates at 8-second interval.
INT (Mid):	The wiper operates at 6-second interval.
INT (Fast):	The wiper operates at 3-second interval.
ON	The wiper operates continuously.

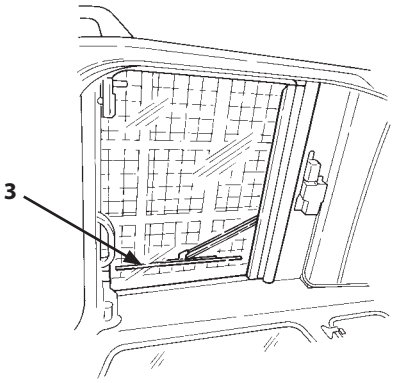

M157-01-081

- Washer
  Press and hold the wiper/washer switch to squirt washer fluid onto the front window. When the wiper/washer switch is pressed for more than 2 seconds, the wiper operates until the switch is released. When the wiper/washer switch is released, the wiper automatically retracts.
  While operating the wiper in the INT mode, when the wiper/washer switch is pressed, the wiper operation mode is changed to the continuous operation mode.

Numeric Keypad

Used for inputting password.
Press the numeric keypad of 1 to 8 while the radio is ON, the radio station will switch to memorized channel of 1 to 8.
When the light is turned ON, the monitor changes to night mode screen.
Even if the light is turned ON, you can activate the daytime screen by pushing "0" on the numeric keypad.

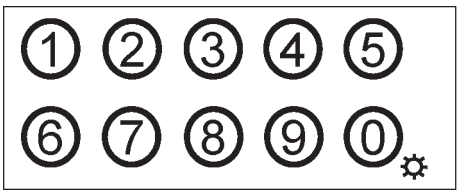

MDAA-01-018

Switch Panel (for Optional Equipment)

NOTE: The optional switch locations differ depending on the kinds of optional devices are equipped. Before using the switches, make sure what kinds of optional devices are equipped. Raise the armrest when operating the optional switch. All available optional devices are shown below.

- Travel Alarm Deactivation
- Swing Alarm
- Rear Work Light
- Overload Alarm Device Switch
- Seat Heat Switch
- Rotating Lamp
- Electrical Control

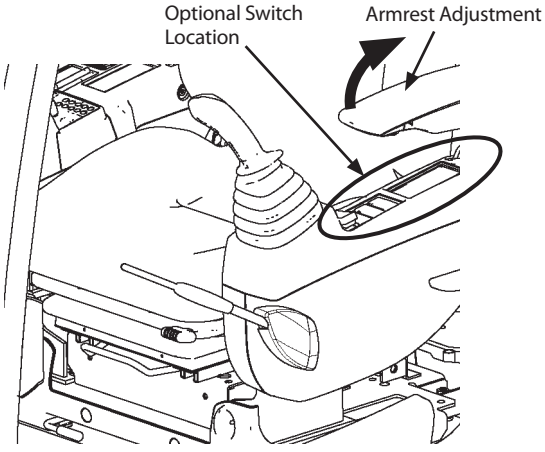

ZX75US-5A MDAA-01-327

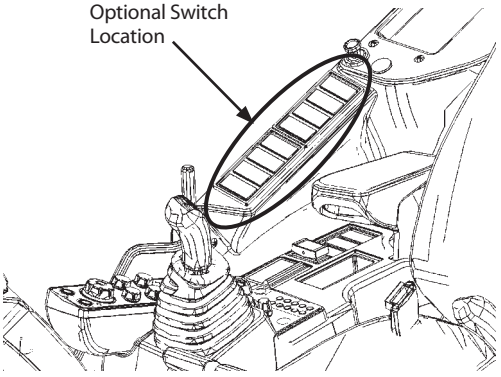

ZX85USB-5A MDED-01-006

Travel Alarm Deactivation Switch (Optional)

The travel alarm buzzer sounds during travel operation. When pushing the mark of travel alarm deactivation switch (1), the travel alarm buzzer function is deactivated.

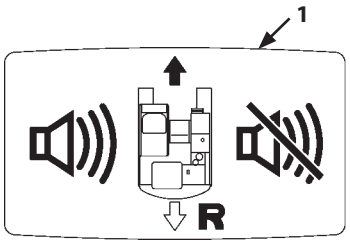

M1U1-01-035

Swing Alarm Deactivation Switch (Optional)

The swing alarm system sounds the buzzer and turns the beacon light ON during swing operation.
When pushing the mark of swing alarm deactivation switch (2), the swing alarm buzzer function is deactivated.

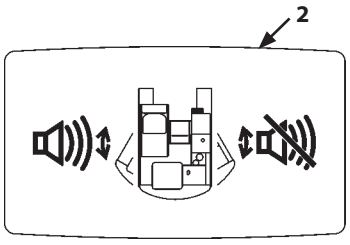

M1U1-01-036

Rear Light Switch (Optional)

When rear light switch (3) is turned ON, the rear light at the rear of the cab roof comes ON.

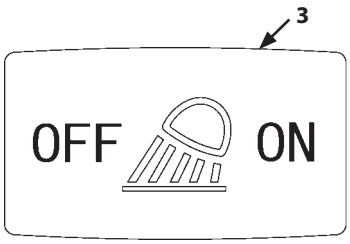

M1P1-01-070

Overload Alarm Switch (Optional)

During lifting load work with overload alarm switch (4) ON, if overloading is detected, the buzzer sounds and overload alarm indicator (5) on the multi-monitor comes ON. Turn overload alarm switch (4) OFF to deactivate the overload alarm system function.

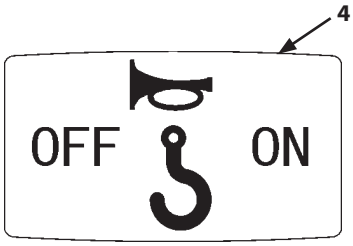

M1U1-01-010

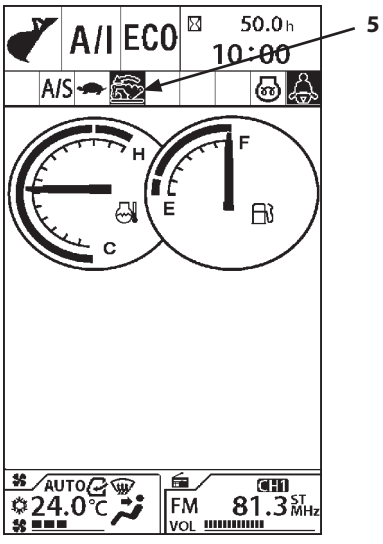

MDED-01-505

Seat Heater Switch

When seat heater switch (6) is turned ON, the seat surface is heated so that the seat section becomes warm. When the temperature of the seat section is raised to the specified temperature, heating is automatically stopped.



M1U1-01-011

Revolving Light Switch (Optional)

When revolving light switch (7) is turned ON, the revolving light provided at the rear on the cab roof comes ON.

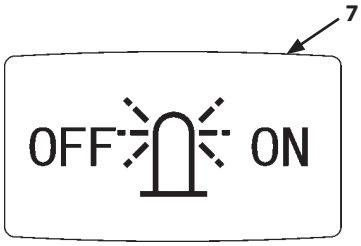

M1U1-01-012

Electrical Control Main Switch (Optional)

Turn the pilot shut-off lever to UNLOCK position. The electrical control (grip switch) system becomes operable by pushing ON of the electrical control main switch (8). It becomes OFF by pressing the switch again. It also becomes OFF when the key switch is turned OFF or the pilot shut-off lever is turned to LOCK position.

CAUTION: When there is no need to use the electrical control (grip switch) system, turn OFF the main switch to avoid misoperation.

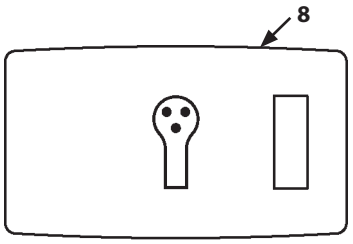

MDAA-01-311

Key Switch

1- OFF (Engine Off)

2- ACC (Horn, Radio etc.)

3- ON (Engine ON)

4- START (Engine Start)

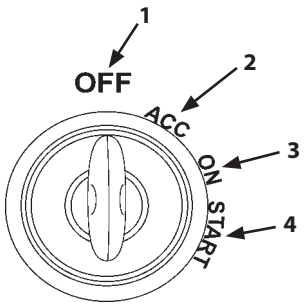

MDCD-01-030

Horn Switch

Horn switch (6) is provided on the top of the left control lever. The horn continuously sounds as long as the switch is pressed.

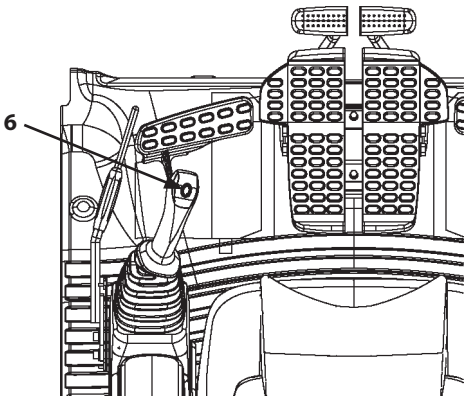

MDAA-01-293

Electrical Control Switch (Optional)

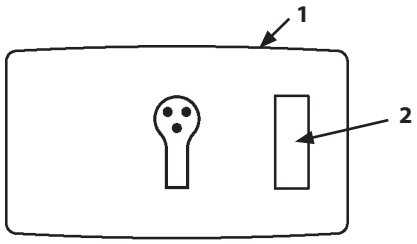

MDAA-01-311

- Attachment Switch (Assist Operation) (Main Operation)
  This switch is mainly used for optional devices and attachments having rotary or tilt function. The attachment becomes operable when ON of electrical control main switch (1) is pushed and main switch indicator (2) is lit.

IMPORTANT: The attachment switch is operable only when indicator (2) of electrical control main switch (1) is lit. Indicator (2) will not light unless the pilot shut-off lever is in UNLOCK position. Besides, the indicator (2) light turns OFF and the attachment switch becomes inoperable when the pilot shut-off lever is placed in LOCK position while indicator (2) is lit. To operate the attachment switch, place the pilot shut-off lever in UNLOCK position, and then push ON of electrical control main switch (1) to turn on indicator (2) light.

AUX Function Lever 1

1. Auxiliary
2. Auxiliary
3. Attachment Switch (Assist Operation) For Other country
4. Attachment Switch (Main Operation) For Australia and Newzealand
4. Auxiliary
5. Horn Switch
6. Auxiliary

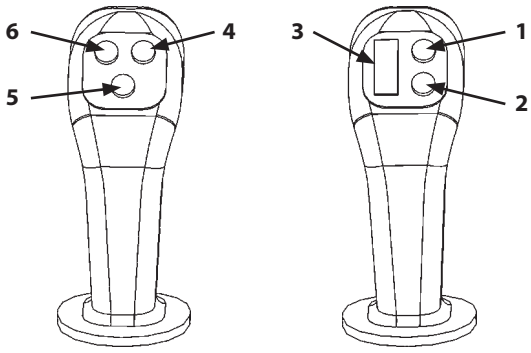

Left Control Lever Right Control Lever

MDAA-01-337 MCGB-01-030

AUX Function Lever 2

1. Auxiliary
2. Auxiliary
3. Attachment Switch (Assist Operation)
4. Attachment Switch (Main Operation)
5. Horn Switch
6. Auxiliary

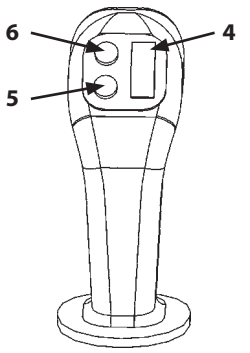

Left Control Lever

MCGB-01-029

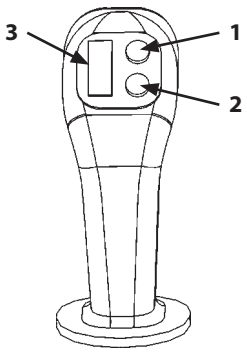

Right Control Lever

MCGB-01-030

CAUTION:

- **The switches on the auxiliary function lever are for operating the attachments to the tip of the arm. Do not use the switches for any other operation.**
- **Before using any of these switches, thoroughly read the operation manual of the corresponding attachment and check the operation of each function in a safe area.**
- **Before operating an attachment with any of the switches, confirm the requirements on safe and proper mounting and operation of the attachment with its manufacturer or distributor and observe such requirements.**
- **Do not use any of these switches to attach or remove QuickHitch or any other couplers or attachments.**
- **HITACHI does not bear any responsibility for any human injury, property damage, malfunction and/or physical loss or damage to the excavator or any part thereof caused by unauthorized use of any of the switches, use of unauthorized attachments or parts, or modification of any of the switches, each of which will void Hitachi's Warranty.**

Cigar Lighter

Using Cigar Lighter

IMPORTANT: In case the cigar lighter does not pop out automatically 30 seconds after pushing the cigar lighter in, pull out the cigar lighter manually. Then, consult the your nearest Hitachi dealer.

1. Turn key switch (1) to the ACC or ON position.
2. Press and release the lighter knob.
3. The cigar lighter knob will return to the original position when the lighter becomes usable. Pull the cigar lighter out to use.
4. After using the cigar lighter, insert the cigar lighter into the panel until the knob is seated in the original position.

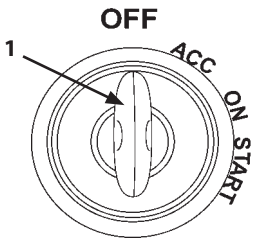

MDCD-01-030

Using Cigar Lighter Port as External Power Source

Use the cigar lighter port to supply power to lighting equipment for servicing the machine.

IMPORTANT: Only 24 V electric power is available from the cigar lighter port on this machine.

Never connect accessories that use power other than 24 V. Damage to the batteries and accessories may result.

Do not supply power to accessories for a long time without running the engine. Failure to do so may discharge the batteries.

1. Pull the lighter knob out.
2. Correctly insert the accessory socket into the cigar lighter port.
3. Turn key switch (1) to the ACC or ON position. Power is supplied to the connected accessory.
4. After using the accessory, disconnect the accessory socket and insert the cigar lighter into the port.

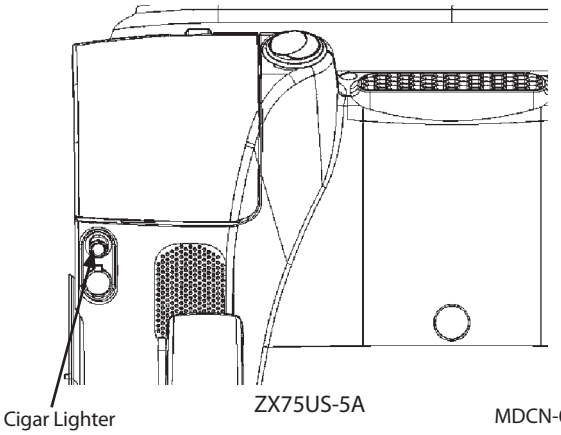

ZX75US-5A

MDCN-01-006

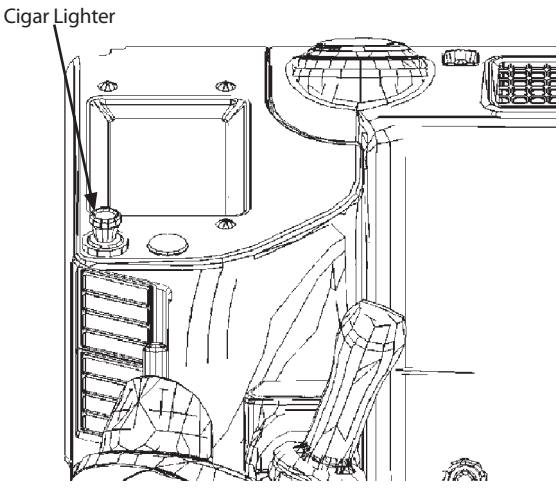

ZX85USB-5A

MDED-01-008

Cab Light Switch

Push switch (1) on the cab light to turn the cab light ON.

ON	:	The cab light comes and stays ON. (The light does not turn ON while the key OFF.)
OFF	:	The light goes OFF.
DOOR (ZX75US-5A)	:	The room lamp lights on in conjunction with the opening of cab door. The lamp automatically goes off after 30 seconds. (The light turns ON while the key switch is OFF.)

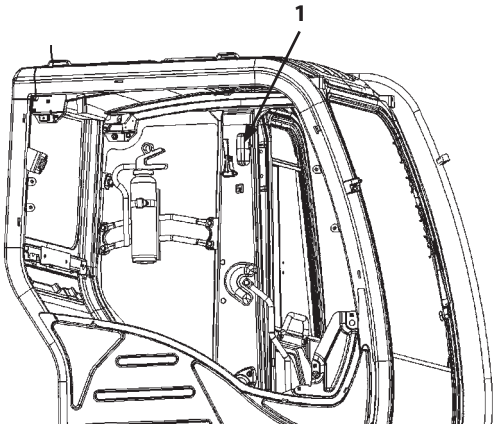

ZX75US-5A MDCN-01-007

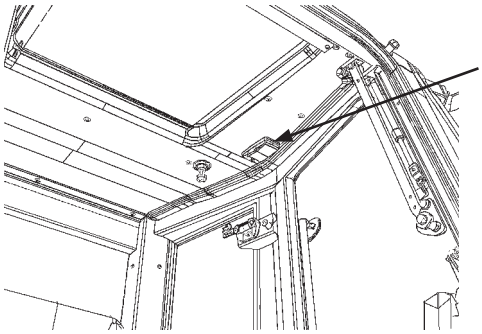

ZX85USB-5A M1P1-01-033

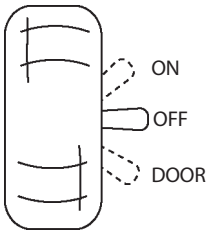

MCGB-01-023

ZX75US-5A

Installing Fire Extinguisher (Optional)

A fire extinguisher can be installed at the left rear corner inside the cab. Consult your nearest HITACHI dealer to install a fire extinguisher.

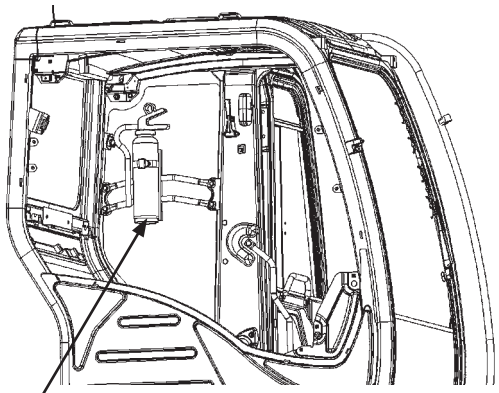

MDCN-01-007

ZX75US-5A

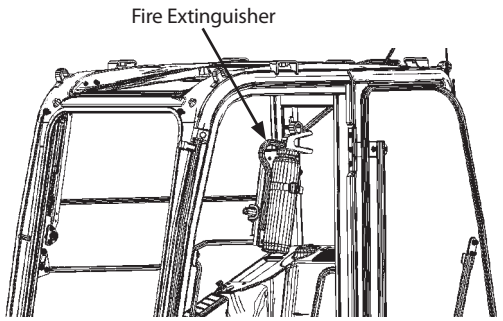

ZX85USB-5A

MDED-01-009

Pilot Control Shut-Off Lever

Pilot control shut-off lever (1) functions to prevent the machine from being mistakenly operated when the operator is getting on or off the machine.

WARNING:

- **Always pull pilot control shut-off lever (1) into the full LOCK position. Unless front control lever lock (1) is fully moved to the LOCK position, the front control lever is not locked, possibly creating a hazardous situation.**
- **When leaving the machine, always stop the engine. Then, pull the pilot control shut-off lever up to the LOCK position.**
- **Always pull the pilot control lever up to the LOCK position before transporting the machine and leaving the machine.**
- **Confirm that the pilot control shut-off lever is in the LOCK position before starting the engine. The engine will not start in other than the LOCK position.**

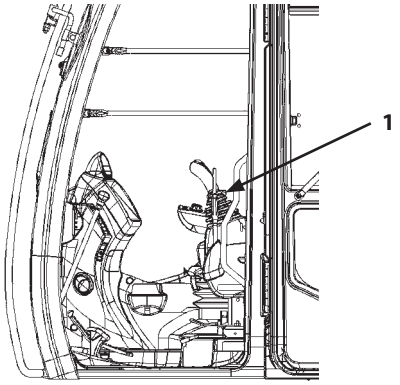

LOCK position
ZX75US-5A
MDCN-01-008

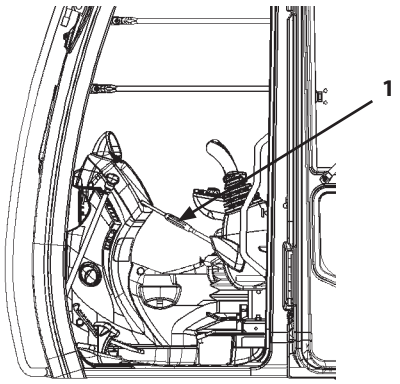

UNLOCK Position
ZX75US-5A
MDCN-01-009

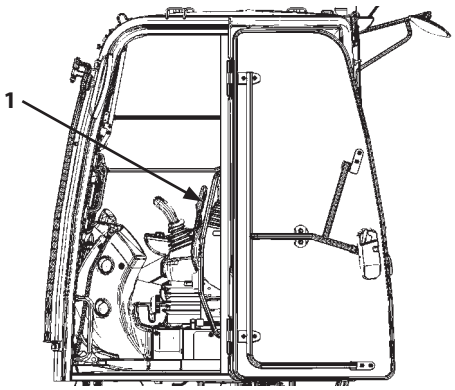

LOCK position
ZX85USB-5A
MDED-01-010

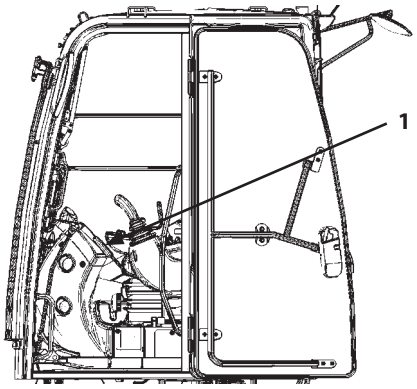

UNLOCK Position
ZX85USB-5A
MDED-01-011

Engine Stop Switch

In case the engine does not stop even if the key switch is turned OFF due to failure of the machine, move switch (2) located at the front-left side of the seat stand downward to stop the engine.
After operating switch (2), be sure to return the switch back to the upward position.

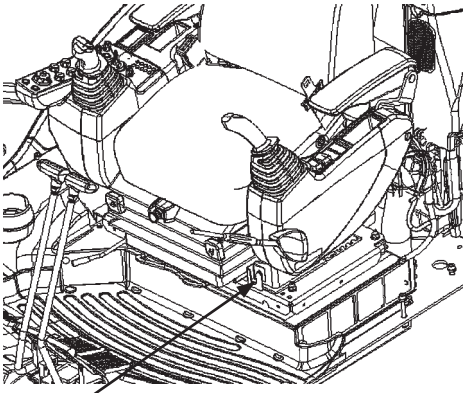

MDCN-01-004
ZX75US-5A

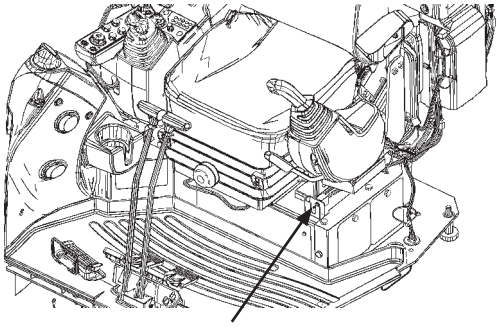

MDED-01-005
ZX85USB-5A

Fuse Box

Fuse Box A

10- CONTROLLER 5 A
9- BACKUP 10 A
8- SPARE
7- START 5 A
6- OPTION2 (ALT) 20 A
5- OPTION1 (ALT) 5 A
4- SOLENOID 20 A
3- HEATER 20 A
2- WIPER 10 A
1- LAMP 20 A
20- OPTION3 (BATT) 5 A
19- HORN 10 A
18- IDLE STOP 5 A
17- FUEL PUMP 5 A
16- POWER ON 5 A
15- AUX. 10 A
14- MONITOR 5 A
13- LIGHTER 10 A
12- RADIO 5 A
11- DC-DC 20 A

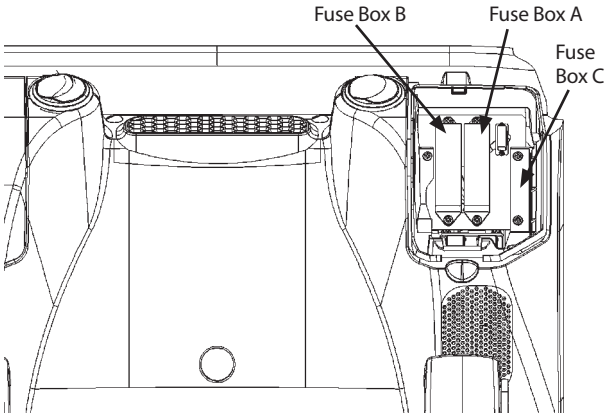

ZX75US-5A MDCN-01-010

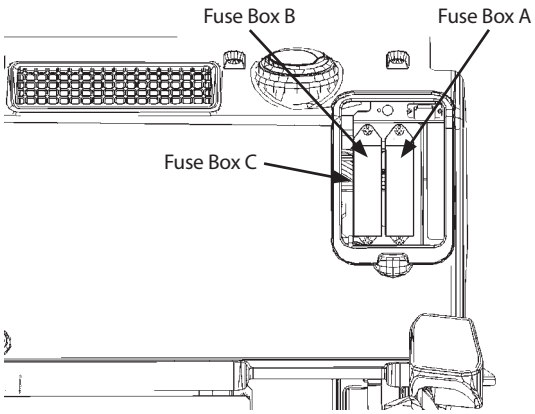

ZX85USB-5A MDED-01-012

Fuse Box B

30- SPARE
29- SPARE
28- SPARE
27- AUX.3 5 A
26- QUICK HITCH 5 A
25- IMOBI. 5 A
24- 12V UNIT 10 A
23- CAB LAMP REAR 10 A
22- CAB LAMP FRONT 10 A
21- SEAT HEATER 10 A
40- SPARE
39- SPARE
38- SPARE
37- SPARE
36- SPARE
35- SPARE
34- AUX.2 10 A
33- WARNING LAMP 10 A
32- CAB LAMP FRONT+2 10 A
31- SEAT COMPR. 10 A

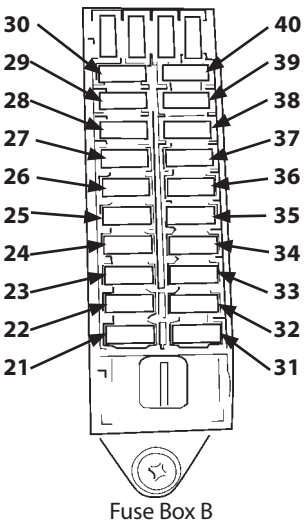

Fuse Box B M1GR-01-003

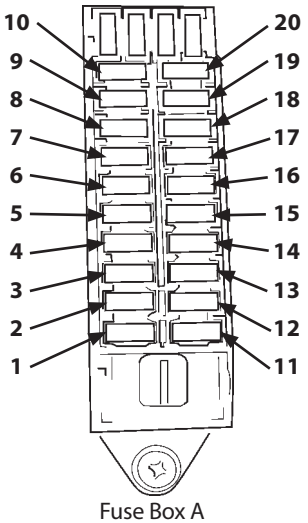

Fuse Box A M1GR-01-003

Fuse Box C

41- DC-DC (E-ECU) 25 A

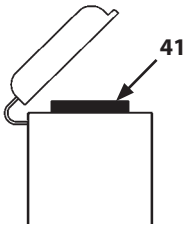

MDED-01-525

Fuse Box C

Auto Air Conditioner

Features

- Full Auto-Temperature Control:
  Automatically controls the cab temperature to maintain the temperature set by the temperature control switch regardless of outside air temperature and insolation.

- Max. Cooling and Heating:
  Maximum cooling or heating can be obtained by rotating the temperature control switch clockwise (32 °C) or counterclockwise (18 °C) respectively.

- Preheating:
  During preheating the cab in winter with the foot vent selected, the air volume is reduced to Low until the coolant temperature rises to prevent cool air from entering the cab.

NOTE: Even in the summer season, the high idle speed may be higher than the normal speed due to the above control.

Components Name

1- Front Vent

2- Foot Vent

3- Defroster Vent

4- Rear Vent

5- Temperature Control Switch/Mode Switch

6- AUTO/OFF Switch/Fan Switch

NOTE: Air flow direction can be changed by controlling the louvers at all air vents except for foot vents (2). In addition, the louvers on front vent (1) and defroster vent (3) can be completely opened and closed by hand.

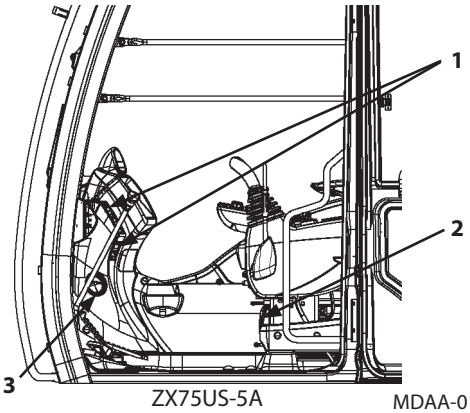

ZX75US-5A MDAA-01-295

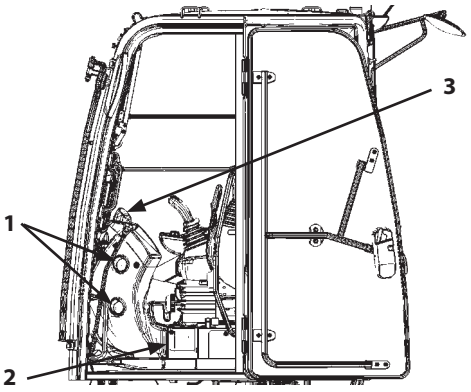

ZX85USB-5A MDED-01-010

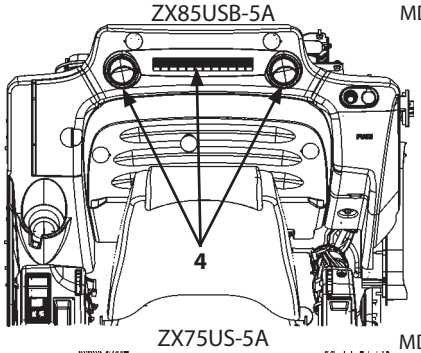

ZX75US-5A MDAA-01-354

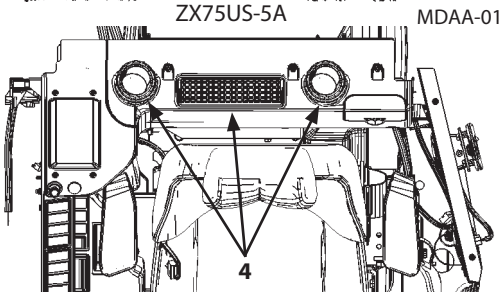

ZX85USB-5A MDED-01-014

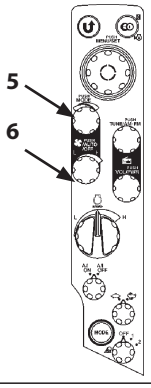

MDCD-01-026

Controller Part Name and Function

- Mode Switch (5)
  Selects the air vent. The selected air vent is indicated on monitor (7).

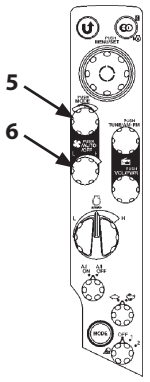

MDCD-01-026

Air flows out of front vent and the defroster vents. (Including defroster vent)

Air flows out of the front, rear and the defroster vents. (Including defroster vent)

Air flows out of the front, rear, foot and the defroster vents. (Including defroster vent)

Foot Vent Mode

Each time mode switch (5) is pressed, the vent location can be changed in four stages as illustrated below.

AUTO→ → → →

- When switch (6) is selected in AUTO:
  The air vent location is automatically selected.

- Temperature Control Switch (5):
  Sets temperature in the cab.
  Temperature in the cab can be set from 18.0 to 32.0 °C by rotating temperature control switch (5). Temperature can be set by 0.5 °C increments.
  The set-temperature is displayed on monitor (7).

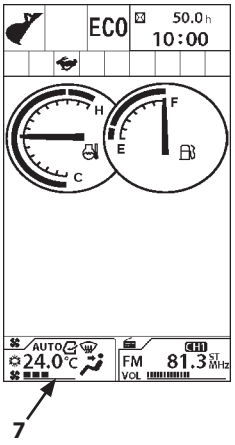

MDAA-01-001EN

- Blower Switch (6)
  - When the AUTO indicator (8) is ON, the blower speed is automatically controlled.
  - When AUTO indicator (8) is OFF, the blower speed is controlled in 6 steps. Rotate blower switch (6) clockwise to increase blower speed. Rotate blower switch (6) counterclockwise to decrease blower speed. The monitor (7) indicates the corresponding blower fan speed.

- AUTO/OFF Switch (6)
  Push AUTO/OFF Switch (6) while the air conditioner OFF, it turns AUTO. Press AUTO/OFF switch (6) while operating the air conditioner, it stops operation.

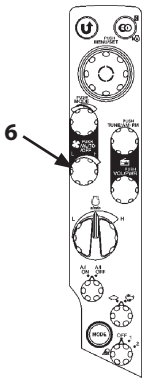

MDCD-01-026

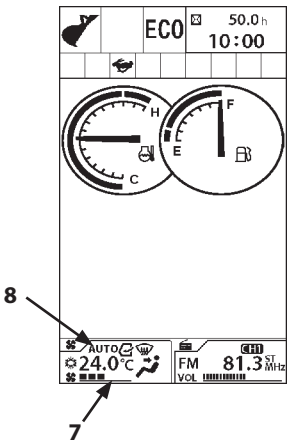

MDAA-01-001EN

Cab Heater Operation

1. AUTO switch (6):

   According to signals sent from various sensors, the air conditioner amplifier automatically selects the air flow-in vents, air suction ports, and air flow-in temperature at the vent, and controls the blower speed.

2. Temperature Control Switch (5):

   Adjust temperature control switch (5) so that "25.0" is indicated on the monitor. Control air temperature inside cab using this switch as necessary.

3. As Necessary:

- Operate Mode switch (5) to manually select the air vent.
- Operate blower switch (6) to manually control the blower speed.
- Operate the air conditioner setting screen on the monitor to maintain the air vent in the fresh air mode or circulation mode.

Usually the cab heater turns the dehumidifier function OFF, however, it turns ON by switching the A/C to ON at the air conditioner setting screen.

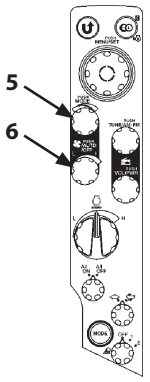

MDCD-01-026

Cooling Operation

1. AUTO switch (6):

   Press AUTO switch (6) to set the air conditioner AUTO mode. According to signals sent from various sensors, the air conditioner amplifier automatically selects the air flow-in vents, air suction ports, and air flow-in temperature at the vent, and controls the blower speed.

2. Temperature Control Switch (5):

   Adjust temperature control switch (5) so that "25.0" is indicated on the monitor. Control air temperature inside the cab using this switch as necessary.

3. As Necessary:

- Operate Mode switch (5) to manually select the air vent.
- Operate blower switch (6) to manually control the blower speed.
- Operate the air conditioner setting screen on the monitor to maintain the air vent in the fresh air mode or circulation mode.

In case the front window (lower) becomes clouded, manually close the defroster vent (3). (It can be closed manually.)

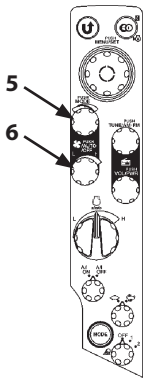

MDCD-01-026

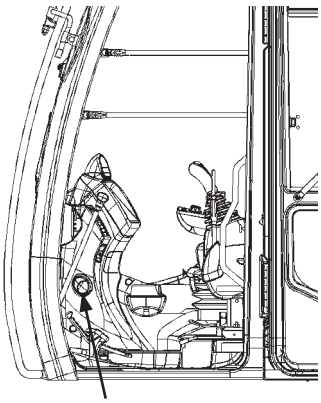

MDCN-01-008

ZX75US-5A

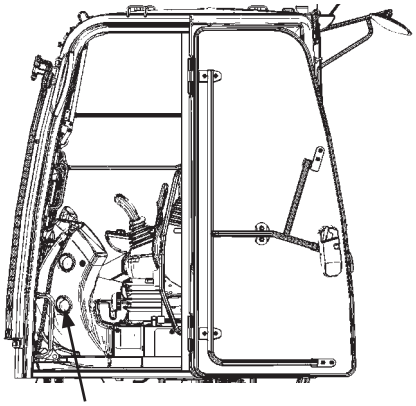

MDED-01-010

ZX85USB-5A

Defroster Operation

1. Press AUTO Switch (6) to blow out temperature-controlled air. During cold weather season when starting the engine, the engine coolant temperature and air temperature in the cab are low. The Heater Start-Operation Control System controls the blow rate to the minimum (LO) in order to restricts cool air from flowing into the cab.
2. Adjust temperature control switch (5) so that "25.0" is indicated on the monitor. Set the fresh air circulation mode from air conditioner setting screen on the monitor.
3. Select the front vents or the front and rear vents using mode switch (5).

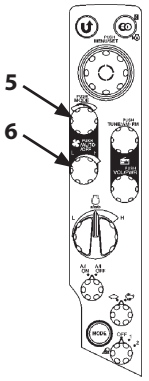

MDCD-01-026

Control air flow direction by adjusting the louvers at the front vent (1) and the defroster vent (3).

Control air temperature in the cab by using temperature control switch (5).
If the windowpanes become clouded in rainy season or wanted to eliminate moisture, turn A/C to ON at the air conditioner screen on the monitor.

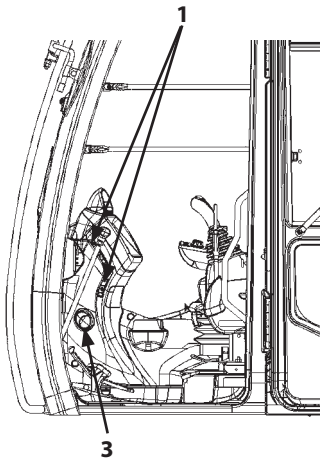

MDCN-01-008

ZX75US-5A

Cool Head/Warm Foot Operation

Cool and warm air is simultaneously supplied to the head vents and foot vents respectively.

1. Press blower switch (6) to adjust the blower speed.
2. Press MODE switch (5) to display the front and rear vent mark on the monitor.

   Turn A/C ON from the air conditioner setting screen on the monitor.

Control air temperature inside the cab by using temperature control switch (5).

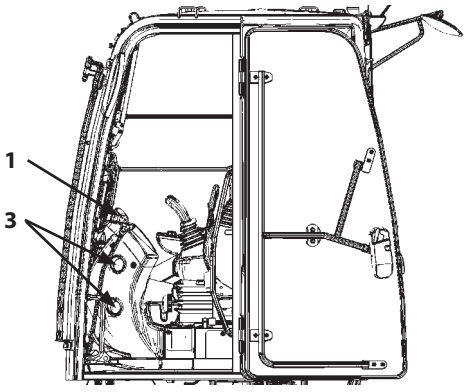

ZX85USB-5A

MDED-01-010

Tips for Optimal Air Conditioner Usage

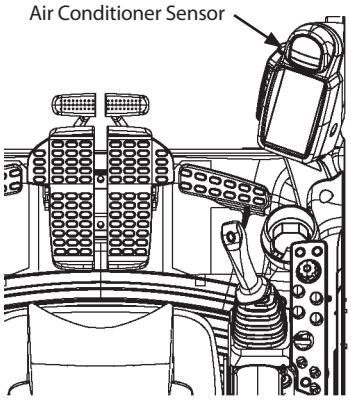

MDAA-01-292

For Rapid Cooling

Temperature in the cab may rise over 80 °C (176 °F) when the machine is exposed to sun light in the summer.
In this case, ventilate air in the cab first by opening the windows for rapid cooling.
After starting the engine, press AUTO switch (6). Set temperature to "18.0" on the monitor by using temperature control switch (5). Turn circulation mode ON from air conditioner setting screen on the monitor.
Close the window when the cab cools down to the ambient temperature.

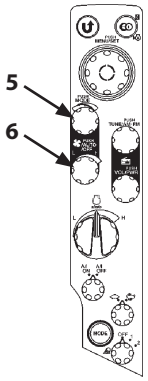

MDCD-01-026

When Windows Become Clouded

If the insides of the windows become clouded during rainy weather or on humid days, operate the air conditioner to aid in keeping the windows clear.
When the atmosphere is very damp, and if the air conditioner has run excessively, the outside of the windows may become clouded. If this happens, turn off the air conditioner to adjust the temperature in the cab.

Off-Season Air Conditioner Maintenance

To protect each part of the compressor from a lack of lubricant, operate the air conditioner at least once a month for several minutes with the engine running at a slow speed during off-season.

IMPORTANT:

- **Do not suddenly increase the engine speed. Failure to do so may damage the compressor.**
- **Refer to the item "Check Air Conditioner Filter" in the Maintenance Section for maintenance of the air conditioner filters.**
- **Always clean the auto air conditioner sensor for effective air conditioner performance. Avoid placing any obstructions around the sensor.**

AM/FM Radio Operation

CAUTION: Refrain from listening to the radio in the cab while operating the machine

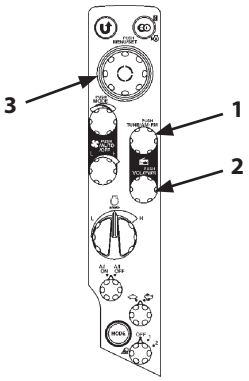

MDCD-01-026

Controls on the Radio

1- AM/FM Selector/Tuning Switch

"FM" and "AM" are switched over alternately each time the switch is pressed. Rotate the tuning knob clockwise to increase frequency, counterclockwise to decrease frequency.

2- Power Switch/Volume Control Knob

Push: Turns power ON/OFF. Turn the volume control knob clockwise to increase the sound volume. Turn it counterclockwise to decrease the sound volume.

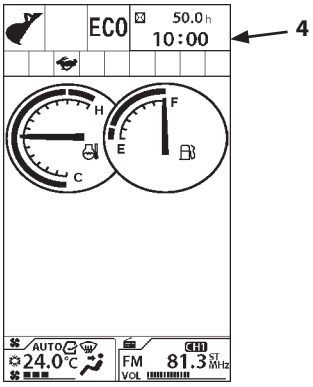

MDAA-01-001EN

Tuning Procedure

- Manual Tuning Procedure
  Rotate tuning switch (1) until the desired station is reached.

- Automatic Search Function

1. Press selector knob (3) while displaying basic screen (4) to display main menu screen (5).
2. Rotate selector knob (3) to highlight Radio (6).

   Press selector knob (3) to display the radio screen.

   Rotate selector knob (3) to highlight seek (8). Push selector knob (3) to go to the next higher frequency station. Press selector knob (3).

   Rotate selector knob (3) to highlight seek (7). Push selector knob (3) to go to the next lower frequency station. Press selector knob (3).

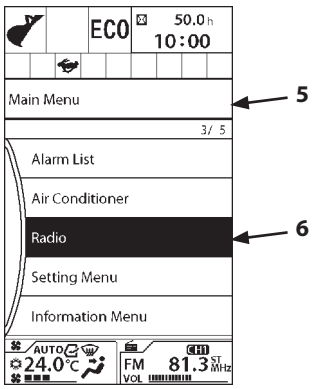

MDED-01-092EN

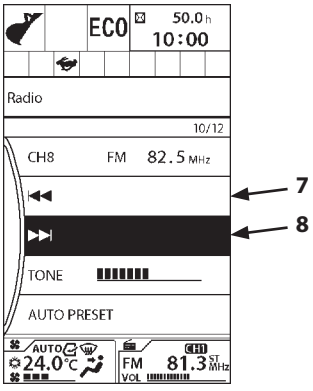

MDAA-01-095EN

Station Presetting Procedure

Setting from Monitor

1. Select the desired station. Refer to the "Tuning Procedure" in the previous section.
2. Press selector knob (1) while displaying basic screen (2) to display main menu screen (3). Rotate selector knob (1) to highlight radio (4).
3. Press selector knob (1) to display Radio screen (5).
4. Rotate selector knob (1) to highlight a CH to preset a station. (CH1 to CH8)
5. Press and hold selector knob (1) for more than 1 second. The current station is preset to the selected CH.

Setting from numeric keypad (7)

1. Select the desired station. Refer to the "Tuning Procedure" in the previous section.
2. Press and hold one numeric keypad (7) (1 to 8) for more than 1 second. The current station is preset to the selected number of CH.

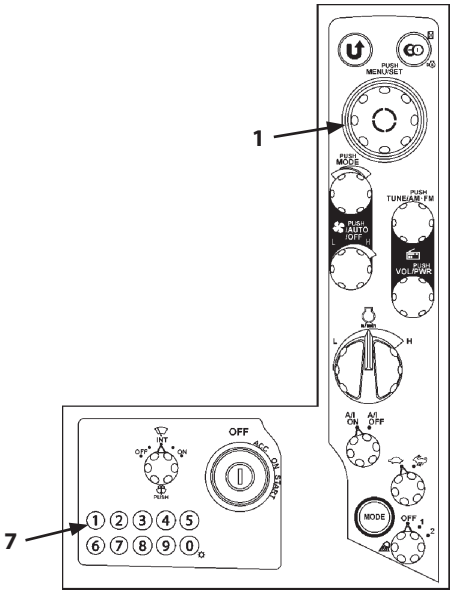

MDCD-01-027

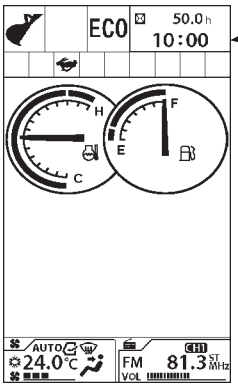

MDAA-01-001EN

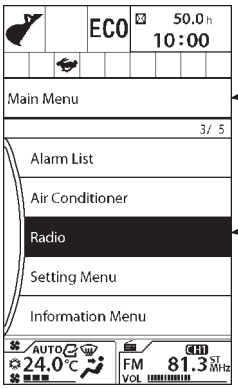

MDED-01-092EN

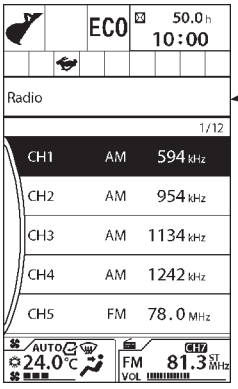

MDAA-01-093EN

Station Auto-Presetting Procedure

Receivable stations can be automatically sought and preset to the memory.

1. Press selector knob (1) while displaying basic screen (2) to display main menu screen (3).
2. Rotate selector knob (1) to highlight Radio (4).

   Press selector knob (1) to display Radio screen (5).
3. Rotate selector knob (1) to highlight AUTO PRESET (6).
4. Press selector knob (1) to start AUTO PRESET process. The AUTO PRESET scans reception frequency, allocate sought stations to CH1 to CH8 from sensitive station. AM will be preset to CH1 to 4, FM will be preset to CH5 to 8. Operating the radio during scan stops the AUTO PRESET.

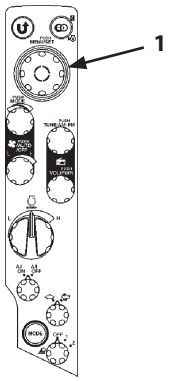

MDCD-01-026

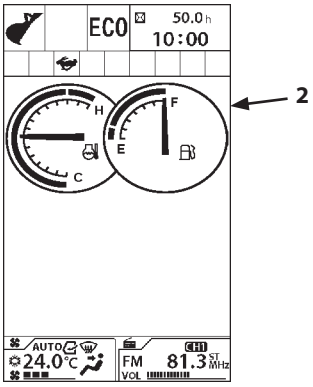

MDAA-01-001EN

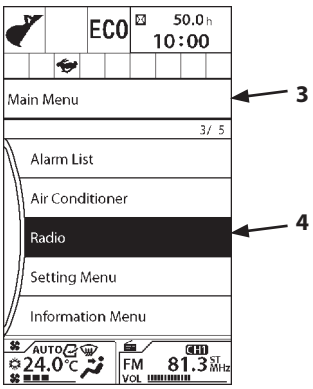

MDED-01-092EN

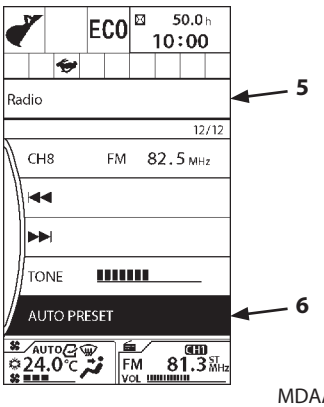

MDAA-01-099EN

TONE Control

1. Press selector knob (1) while displaying basic screen (3) to display main menu screen (4).
2. Rotate selector knob (1) to highlight Radio (5).

   Press selector knob (1) to display Radio screen (6).
3. Rotate selector knob (1) to highlight TONE (7).
4. Press selector knob (1) to adjust TONE control. Rotate selector knob (1) clockwise to boost treble. Rotate selector knob (1) counterclockwise to boost bass. Press selector knob (1) to enable the changes.

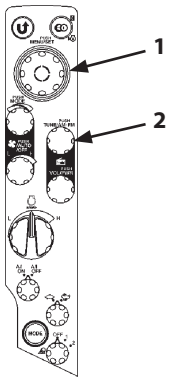

MDCD-01-026

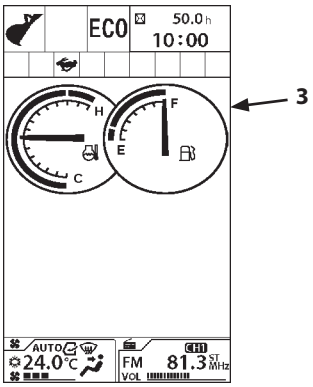

MDAA-01-001EN

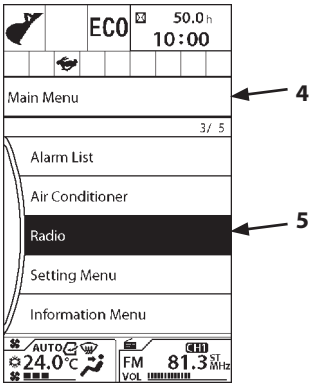

MDED-01-092EN

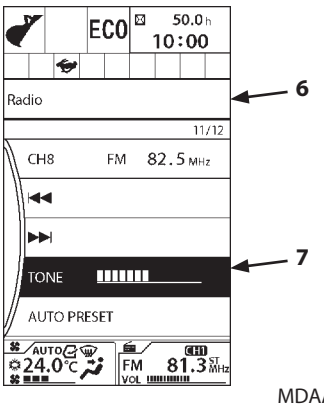

MDAA-01-096EN

Audio Input (Optional)

IMPORTANT: This function is available only to a machine equipped with an audio input (optional). Use this function with proper sound volume.

Audio Input Selection

Attach the audio input (optional) device and push AM/FM Switch/Tuning Switch (1) to display AM and FM screen as well as AUX input screen (3).

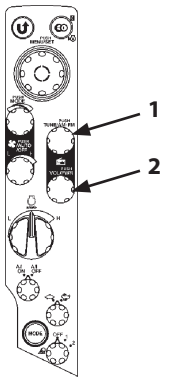

MDCD-01-026

Connecting audio device

By removing AUX IN Cap (4), the audio input terminal appears.
Connect your audio device to the audio input terminal of the machine with your audio cable.

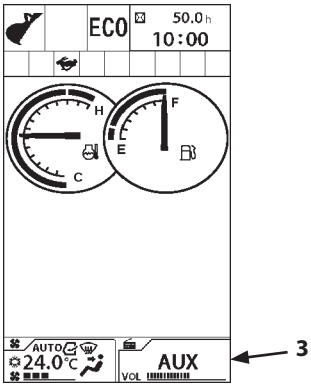

MDAA-01-340

IMPORTANT:

- **Use Φ3.5 mm stereo plug for the connection of audio input terminal.**
- **Put AUX IN cap (4) when the audio input is not in use.**

Volume Control of audio device

Turn the volume down to the minimum beforehand, and then turn volume control knob (2) clockwise to adjust the volume.

IMPORTANT:

- **If volume control knob (2) has been set to the maximum, you will hear an overwhelming sound; so set the volume control knob to the minimum first and then turn it clockwise to increase it. Adjust the volume knob on the audio device if the sound is too low even volume control knob (2) is set at top.**
- **Operate your audio device to play or stop the sound.**

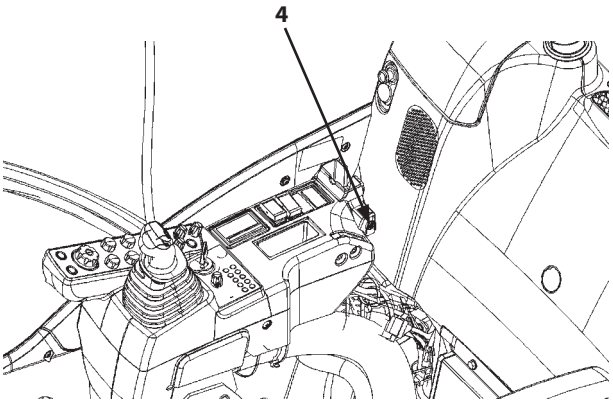

MDCN-01-011

Cab Door Release Lever

CAUTION:

- **Open the cab door all the way until it securely locks in the latch on the side of the cab.**
- **Do not unlock the cab door when the machine is parked on a slope or while the wind is blowing hard. The cab door may close accidently, possibly resulting in personal injury.**
- **When opening or closing the cab door, take extra care not to catch fingers between the base machine and the cab door.**

To unlock the door, push down on lever (1).

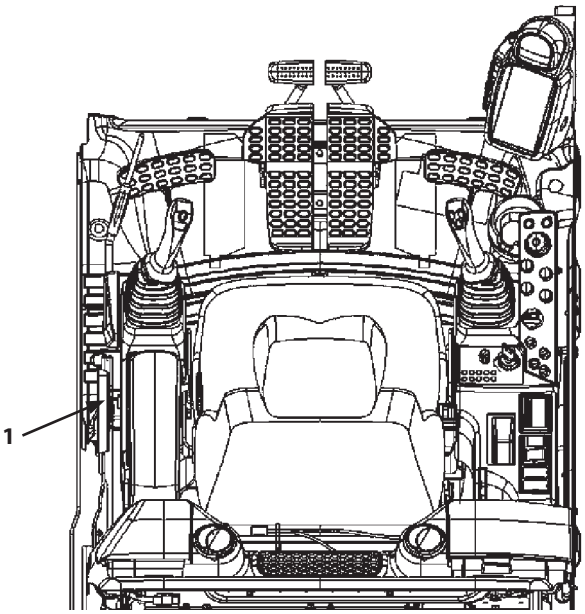

ZX75US-5A MDCN-01-002

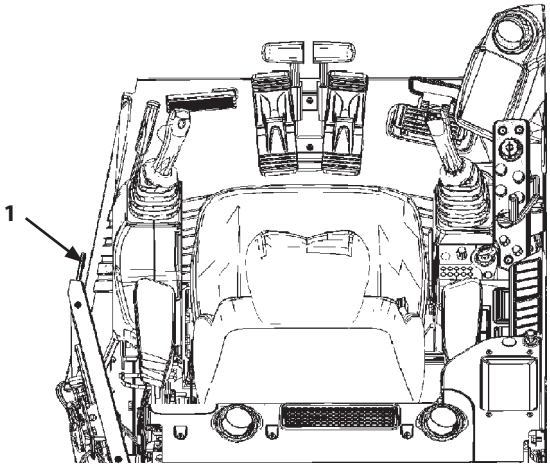

ZX85USB-5A MDED-01-003

Opening/Closing and Removing Cab Inside Window

WARNING:

- **Open, close or remove the upper-front cab window, overhead window, cab door window or lower-front window only after lowering the front attachment to the ground and pulling up pilot control shut-off lever (1) to the LOCK position. Failure to do so may allow the machine to move unexpectedly if a control lever or pedal is touched with a part of the body by mistake, possibly resulting in personal injury or death.**
- **Park the machine on a level and solid ground and stop the engine before opening and closing the upper front window.**
- **To open the upper front window, hold the window by hands, hold it until the window is locked.**
- **When closing the window, it may accidently fall by its own weight. Hold the window by hands until it is completely closed. Since the window stops before it completely closes, do not operate the machine at the position with the window being stopped. The window is not locked at that position, having the possibility of suddenly dropping.**

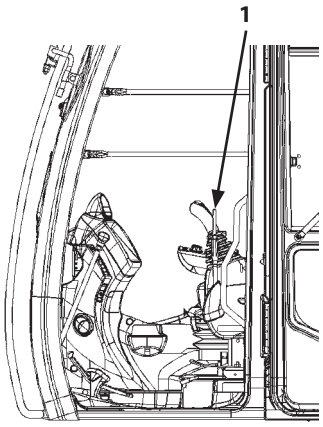

ZX75US-5A MDCN-01-008

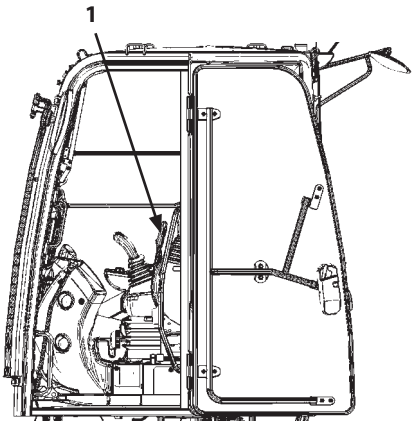

ZX85USB-5A MDED-01-010

Opening Upper Front Window

ZX75US-5A

Opening Upper Front Window

1. Press lock release lever (1) at the upper center to release the upper front window lock.
2. Holding lock release lever (1) at the upper center and lower handle (4) on the upper front window as illustrated, pull the upper front window up and back until auto locks (3) at both sides of the upper front window securely catches into the strikers on the ceiling.
3. After confirming that the window securely catches into auto locks (3), slide lock pin (2) into the left bracket boss hole to lock the window in position.

NOTE: When the upper front window is opened, the wiper and washer are inoperable.

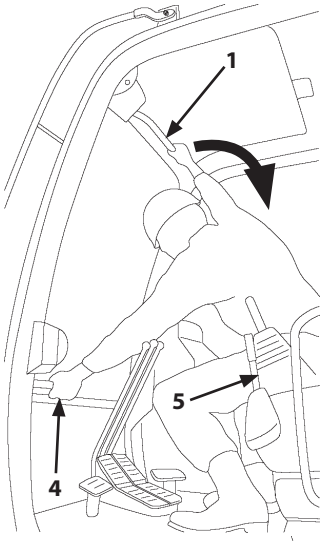

MDAA-01-358

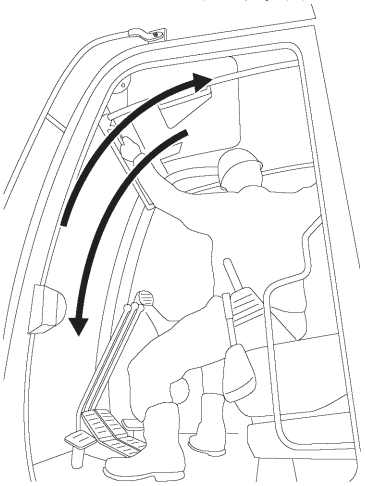
MDAA-01-359

CAUTION:

- **Slowly close the upper front window so that not to catch your fingers.**
- **Always secure lock pin (2) in the lock position after the upper front window is opened.**
- **Always pull pilot control shut-off lever (5) to the LOCK position before opening or closing the upper front window.**

4. To close the upper front window, hold lock release lever (1) at the upper center and lower handle (4) on the upper front window as illustrated, and follow the steps 1 to 3 in the reverse order. The window stops before it completely closes, so close the front window by pushing release lever (1) upward.

   Push lock release lever (1) downward to release auto lock (3).

NOTE: Unless the upper front window is securely closed, the wiper and washer will not operate.

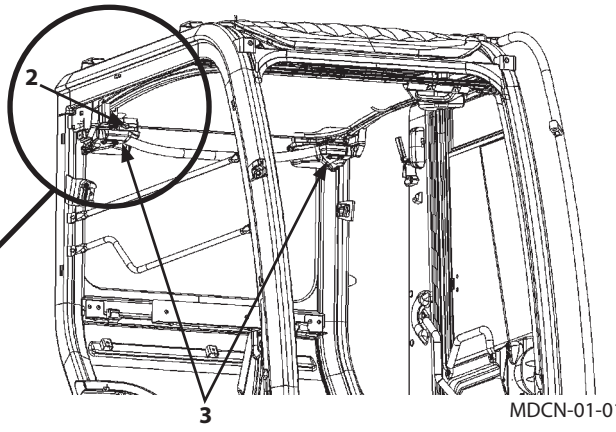

MDCN-01-014

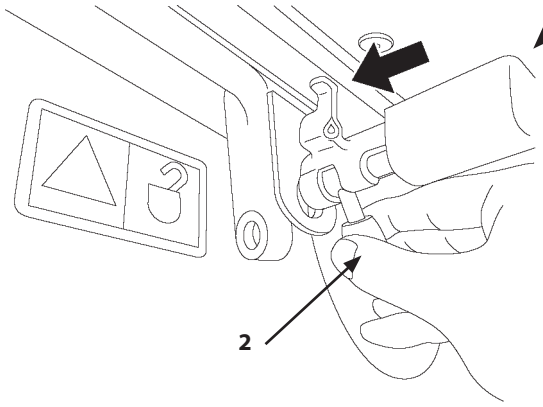

MDAA-01-360

ZX85USB-5A

1. Press lock release levers (2) at the both right and left to release the upper front window lock.
2. Hold the right and left handles (3) on the upper front window and move the upper front window up and back until lock release levers (2) are locked again.
3. After confirming that lock release levers (2) are securely locked, set lever (4) of the cab rear upper side under the front window.

NOTE: When the upper front window is opened, the wiper is operable.

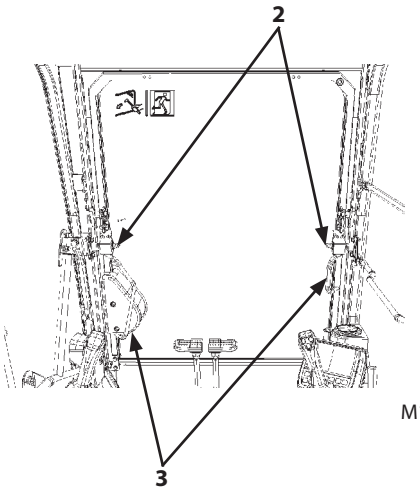

M1P1-01-037

CAUTION:

- **When opening the upper front window, slide and set lever (4) under the front window anytime.**
- **Slowly close the upper front window so that not to catch your fingers.**

4. To close the upper front window, by following the steps 1 to 3 in the reverse order. Hold right and left handles (3) on the upper front window and move the upper front window downward until lock release levers (2) are securely locked.

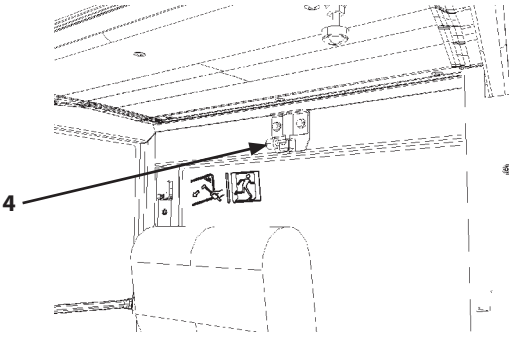

UNLOCK Position

M1P1-01-039

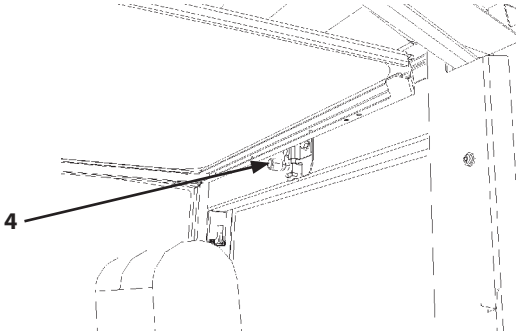

LOCK Position

M1P1-01-038

Removing and Storing Lower Front Window

CAUTION: Take care not to pinch yours fingers when handling the lower front window.

ZX75US-5A

1. Open the upper front window beforehand when removing the lower front window.
2. While pulling the lower front window inward, raise it to remove.
3. Store the removed windowpane in the storing position. After inserting the windowpane into rubbers (2 and 3), slide it sideways securely into rubber (4). Then, push fastener (1) to lock.

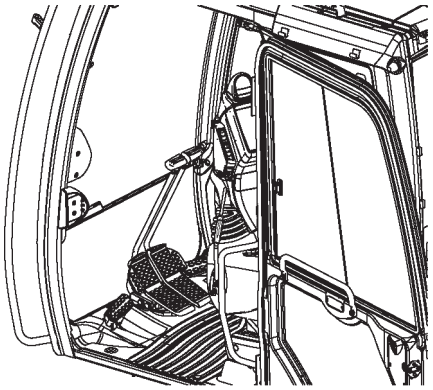

MDAA-01-298

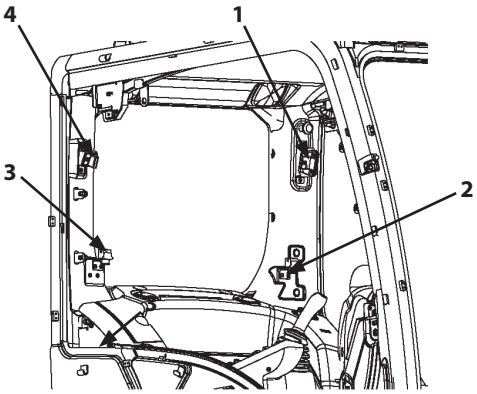

ZX75US-5A

MDAA-01-299

ZX85USB-5A

1. Open the upper front window beforehand when removing the lower front window.
2. Move the lower front window upward and remove it.
3. Store the removed windowpane in the storing position at the rear. After inserting the windowpane into brackets (6 and 7), push it onto (5) and secure it.

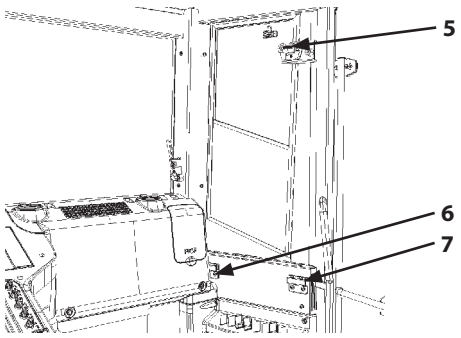

ZX85USB-5A

M1P1-01-040

Opening Side Windows

ZX75US-5A

Hold handle (1) and slide rear pane to open the side window.

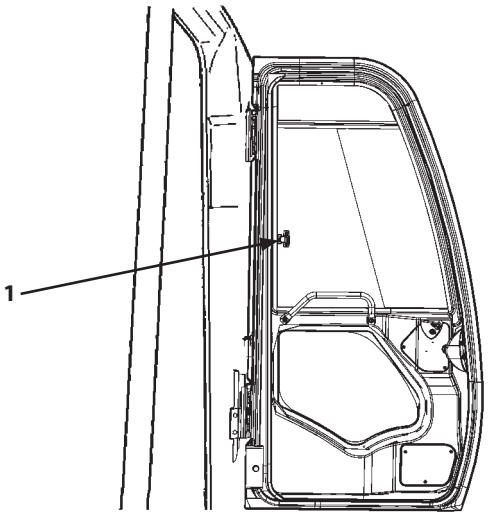

ZX75US-5A M1U4-01-007

ZX85USB-5A

Open or close the rear left window by holding handle (1) and sliding the windowpane of the rear left window upward and downward.

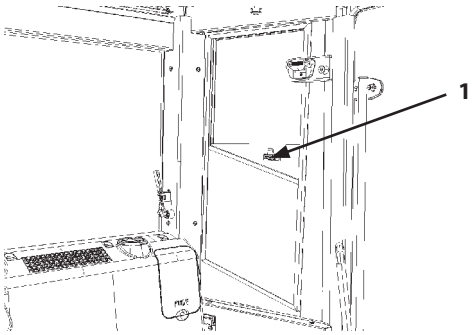

ZX85USB-5A M1P1-01-041

Opening/Closing Overhead Window (Std. Model)

Move lock levers (1) toward center of window. Hold handle (2) and lift window until it rises upright. With the window positioned upright, it will be secured in position by dampers (3).
Hold handle (2) and pull window down until "click" sound is heard from left and right locks (1).
Note that the overhead window can be used as an emergency exit.

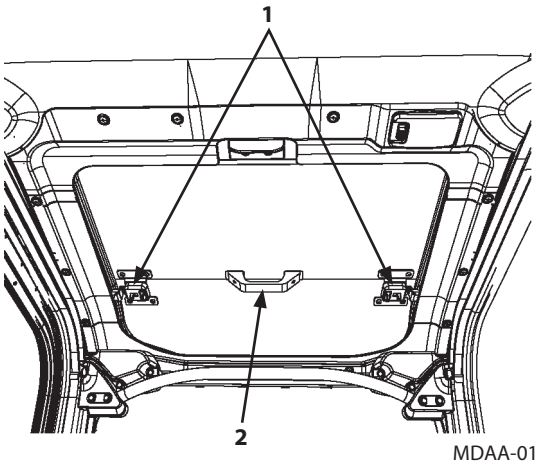

MDAA-01-302

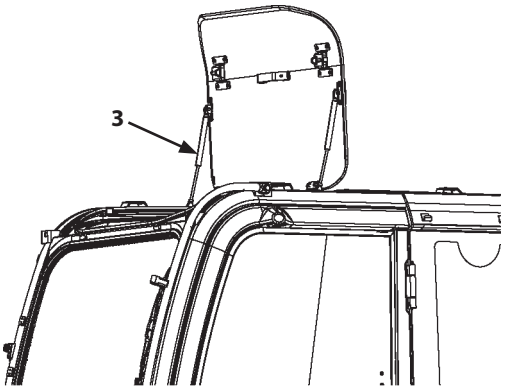

MDAA-01-303

Opening/Closing Overhead Window (Clear Hatch: If Equipped)

Move lock levers (1) toward center of window. Hold handle (2) and lift window until it rises upright. With the window positioned upright, it will be secured in position by dampers (3).
Hold handle (2) and pull window down until "click" sound is heard from left and right locks (1).
Note that the overhead window can be used as an emergency exit.

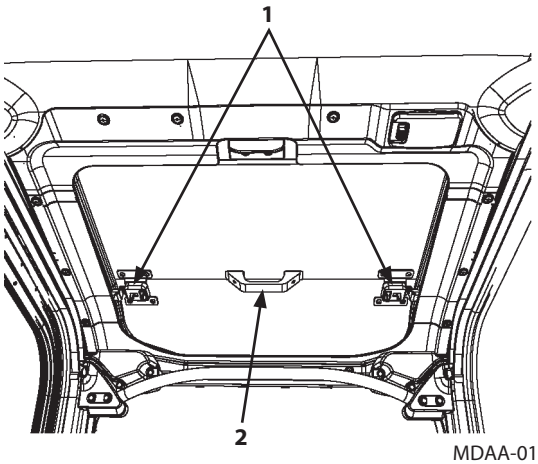

MDAA-01-302

IMPORTANT:

- **Replace the clear hatch with a new one every 5 years even if undamaged. In case it was remarkably damaged or has received severe shock loads, replace it even if it has been not in use for 5 years.**
- **When cleaning the clear hatch, use a neutral detergent.**

  If acidic or alkaline detergent is used, the clear hatch may become discolored or crack.
- **Keep organic solvent away from the clear hatch. Failure to do so may cause the clear hatch to become discolored or crack.**

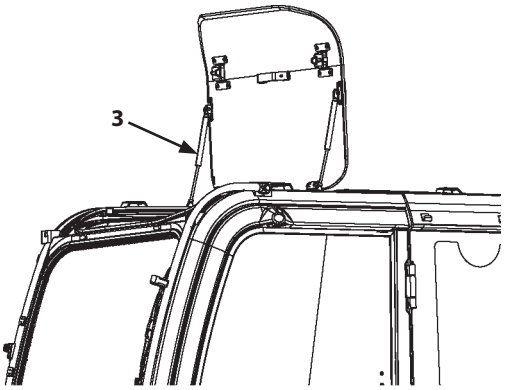

MDAA-01-303

Emergency Exit

ZX75US-5A

Escape from the cab in emergency in the following methods:

WARNING: The danger of downfall is always present when escaping from the cab in emergency, possibly resulting in serious personal injury. Escape from the cab as safely as possible, depending on the posture of machine and the outside situation.

1. Open the cab door. Escape through the door.
2. If the cab door should be difficult to open or use, open the upper front window. Escape through the window.

NOTE:

- *Emergency exit decals (2) are affixed to the front and rear windows.*
- *See page "OPENING UPPER FRONT WINDOW" for the opening method of the upper front window.*

WARNING:

- **If decal (3) is affixed to the front window glass, the glass can be broken. However if decal (3) is not affixed to the front window glass, the glass cannot be broken with emergency evacuation tool (1).**
- **Take care not to be injured with pieces of broken glass.**

3. If upper front window should be difficult to open, check the decal (3) affixed to the window glass.

   If decal (3) is affixed to the front window glass, break the front window glass using the emergency evacuation tool (1) installed the cab left side. Then escape through the broken window.

4. If decal (3) is not affixed to the front window glass, or if the front window is not available for escaping, break the rear window glass using the emergency evacuation tool (1). Then escape through the broken window.
5. If neither of front and rear windows is available for emergency exit, open the overhead window to escape from the cab.

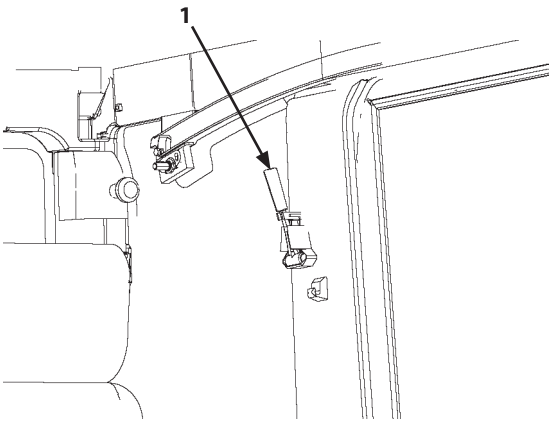

MDAA-01-321

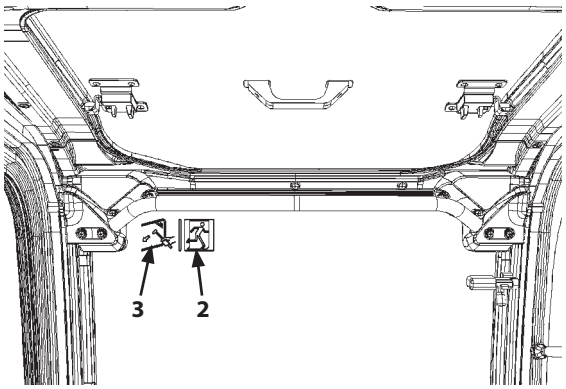

M1U4-01-012

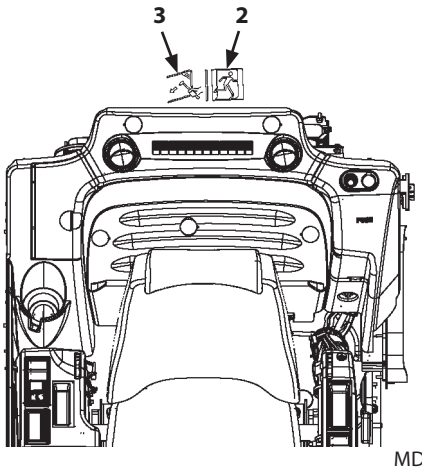

MDAA-01-322

ZX85USB-5A

Escape from the cab in emergency in the following methods:

WARNING: The danger of downfall is always present when escaping from the cab in emergency, possibly resulting in serious personal injury. Escape from the cab as safely as possible, depending on the posture of machine and the outside situation.

1. Open the cab door. Escape through the door.
2. If the cab door should be difficult to open or use, open the upper front window. Escape through the window.

NOTE:

- *Emergency exit decals (2) are affixed to the front and rear windows*
- *See page "OPENING UPPER FRONT WINDOWS" for the opening method of the front windows.*

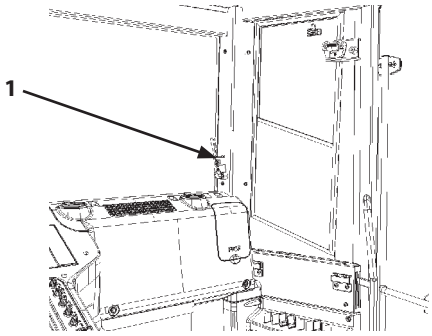

M1P1-01-040

WARNING:

- **If decal (3) is affixed to the front window glass, the glass can be broken. However if decal (3) is not affixed to the front window glass, the glass cannot be broken.**
- **Take care not be injured with pieces of broken glass.**

3. If upper front window should be difficult to open, check the decal (3) affixed to the window glass.
   If decal (3) is affixed to the front window glass, break the front window glass using emergency evacuation tool (1) installed the cab left side. Then escape through the broken window.
4. If decal (3) is not affixed to the front window glass, or if the front window is not available for escaping, break the rear window glass using emergency evacuation tool (1). Then escape through the broken window.
5. If neither of front and rear windows are available for emergency exit, open the overhead window to escape from the cab.

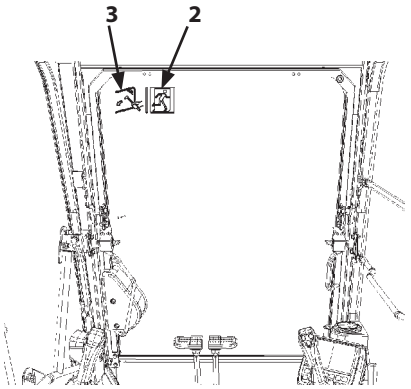

M1P1-01-037

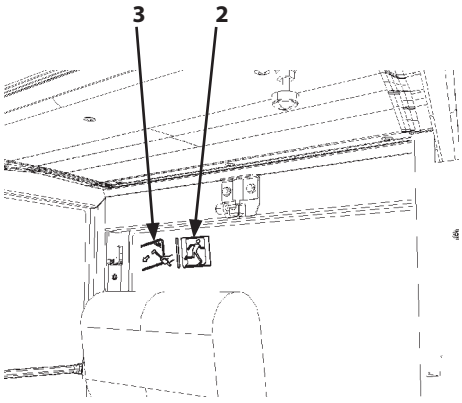

M1P1-01-039

Adjusting Operator's Seat

WARNING: Adjust the seat only after lowering the front attachment on the ground and pulling up the pilot control shut-off lever to the LOCK position. Failure to do so may allow the machine to move unexpectedly if a control lever or pedal is touched with a part of the body by mistake, possibly resulting in personal injury or death.

CAUTION: Avoid possible injury while operating height/tilt lever (1). When pushing down lever (1), do not grab it. Fingers may be pinched between lever (1) and the seat stand. Be sure to push on the upper face of lever (1) by your palm.

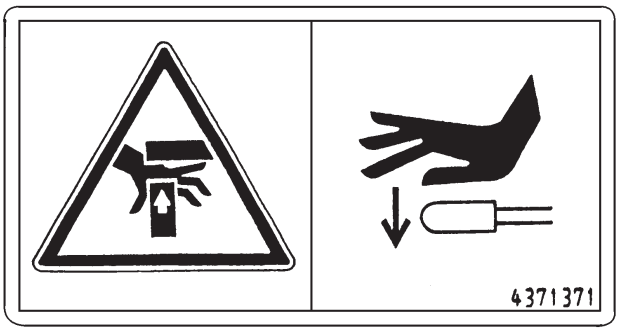

SS-955

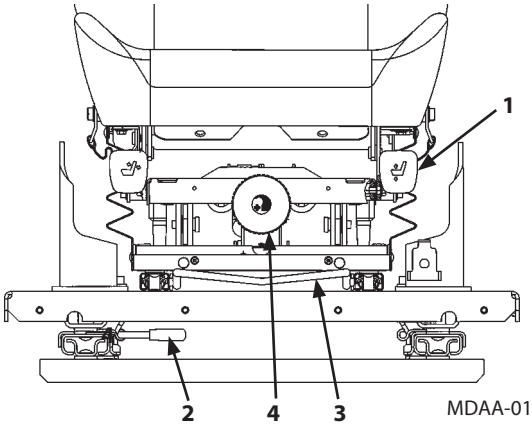

MDAA-01-331

Seat Height and Angle Adjustment

Seat height adjustment range is 60 mm (2.4 in) with steps every 15 mm (0.6 in) (5 positions in total).
Push down lever (1): to adjust front part of the seat.
Pull up lever (1): to adjust rear part of the seat.

Console and Seat Fore-aft Adjustment (ZX75US-5A)

Operate console and seat slide lever (2) to adjust the seat and both right and left consoles to desired distance from the travel pedals and levers. Seat and console fore-aft adjustment range is 160 mm (6.3 in) with steps every 20 mm (0.8 in).

Seat Fore-Aft Adjustment

Operate seat slide lever (3) to adjust the seat to desired distance from the travel pedals and levers. Seat fore-aft adjustment range is 200 mm (7.9 in) with steps every 10 mm (0.4 in).

Suspension Adjustment

Rotate knob (4) to adjust the suspension.
Rotate knob (4) clockwise (+ direction) to increase suspension stiffness.
Rotate knob (4) counterclockwise (- direction) to decrease suspension stiffness.

Backrest Adjustment

Pull up lever (5) to release backrest lock. Move backrest to the desired position and release lever (5).

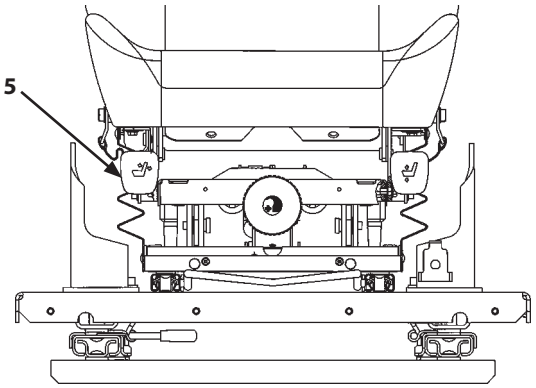

MDAA-01-331

Armrest Adjustment (ZX75US-5A)

Armrest (6) can be pulled upright by hand 90°. Pull the armrest upright by hand to get on and off the machine easily. The angle of armrest (6) can be adjusted to the desired position by turning adjusting dial (7) located on the bottom of armrest (6).

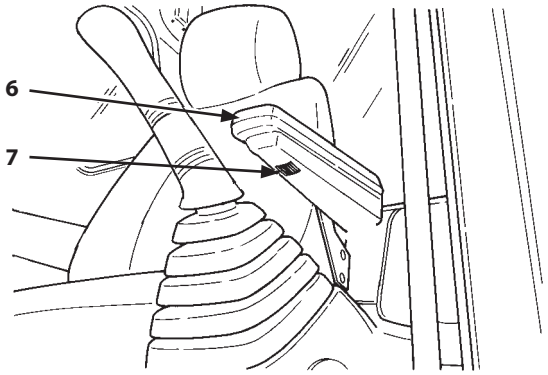

M1G6-01-017

Adjusting Operator's Seat (Optional)

WARNING: Adjust the seat only after lowering the front attachment on the ground and pulling up the pilot control shut-off lever to the LOCK position. Failure to do so may allow the machine to move unexpectedly if a control lever or pedal is touched with a part of the body by mistake, possibly resulting in personal injury or death.

Adjusting Seat Height

IMPORTANT: The seat is an air suspension type.

Pull lever (1) upward to fill air and raise the seat. Push lever (1) downward to release air and lower the seat. When the seat is properly adjusted for your weight, indicator (2) is in the green zone.

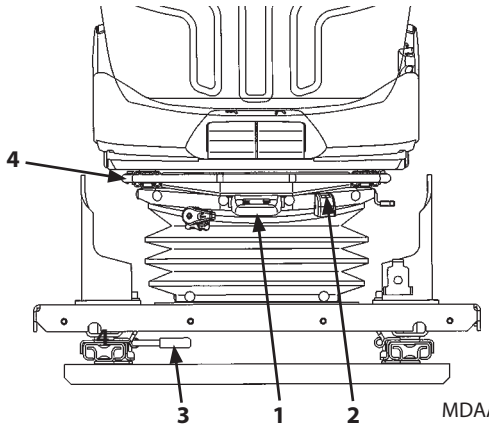

MDAA-01-333

Console and Seat Fore-aft Adjustment (ZX75US-5A)

Operate console and seat slide lever (3) to adjust the seat and both right and left consoles to desired distance from the travel pedals and levers. Seat and console fore-aft adjustment range is 160 mm (6.3 in) with steps every 20 mm (0.8 in).

Seat Fore-Aft Adjustment

Operate seat slide lever (4) to adjust the seat to desired distance from the travel pedals and levers. Seat fore-aft adjustment range is 190 mm (7.5 in) with steps every 10 mm (0.4 in).

Suspension Adjustment

Rotate knob (5) to adjust the suspension.
Rotate knob (5) clockwise to decrease suspension stiffness.
Rotate knob (5) counterclockwise to increase suspension stiffness.

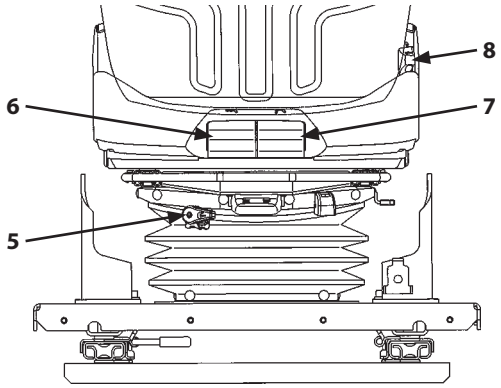

MDAA-01-333

Fore-Aft Position Adjustment of Seat Surface

Pull lever (6) upward to adjust the seat angle. Seat and console fore-aft adjustment range is 60 mm (2.4 in) with steps every 15 mm (0.6 in).

Angle Adjustment of Seat Surface

Pull lever (7) upward to adjust the seat angle. Height of the seat end is adjustable in 4 steps.

Backrest Adjustment

Pull up lever (8) to release backrest lock. Move backrest to the desired position. Move backrest to the desired position and release lever (8).

Armrest Adjustment

Armrest (9) can be pulled upright by hand 90°. Pull the armrest upright by hand to get on and off the machine easily. The angle of armrest (9) can be adjusted to the desired position by turning adjusting dial (10) located on the bottom of armrest (9).

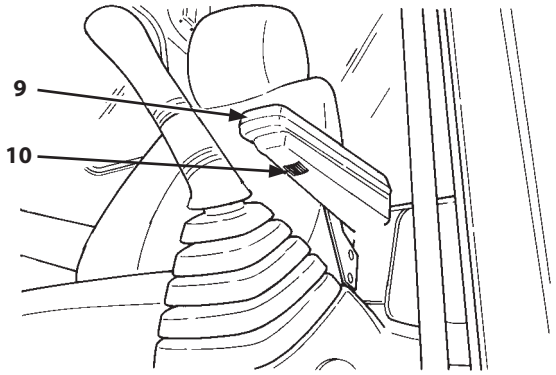

M1G6-01-017

Console Height Adjustment

Adjust the console height to the operator's comfort and/or work conditions.
Adjusting console height can be achieved using three positions provided vertically at 20 mm intervals.

CAUTION: Before loosening the console, support the console. Otherwise, the console may suddenly drop, possibly causing personal injury.

Adjusting Procedures

1. Lower the bucket to the ground. Stop the engine.
2. Move the pilot control shut-off lever to the LOCK position.
3. Remove left and right console holding bolts (1). Loosen bolts (2) to adjust the console height.
4. After adjusting, tighten bolts (1) and (2).

   Tightening Torque: 50 N·m (5 kgf·m)

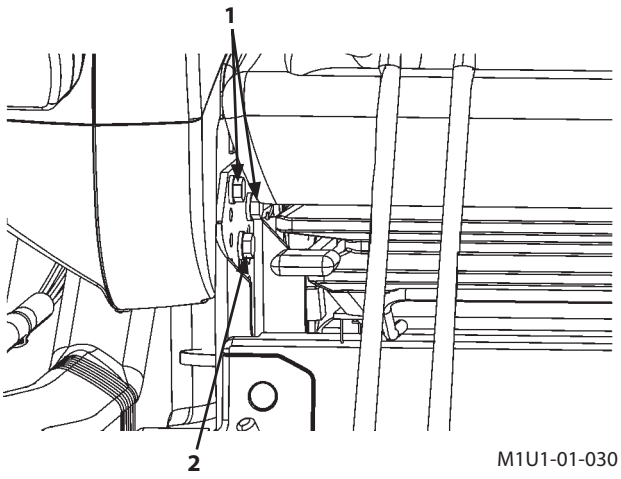

M1U1-01-030

Installation and Adjustment of Mirrors

WARNING: Adjust the mirrors before operating the machine. Improper adjustment of the mirrors provides poor visibility, which may cause serious human injury or death.

IMPORTANT: The image displayed on the rear view monitor is meant only as an aid. When operating the machine, pay thorough attention to the surrounding situation.

Adjust the mirrors so that persons standing within 1 m from the machine (or object with height of 1.5 m and 30 cm in diameter) can be recognized from the operator's seat.

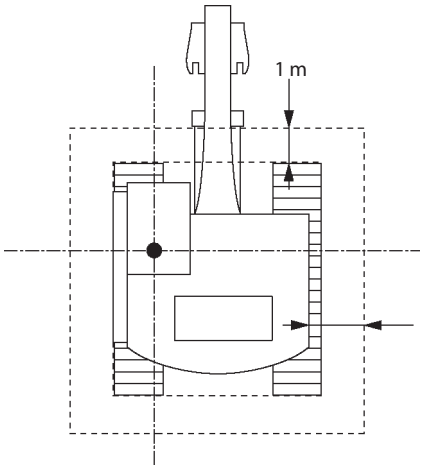

MDAA-01-334

IMPORTANT: If a modification that may restrict operator's visibility is made, determine the operator's visual field again.

Seat Belt

WARNING:

- **Be sure to use seat belt (1) when operating the machine.**
- **Before operating the machine, be sure to examine seat belt (1) and attaching hardware for any failure. If any damage and/or wear are found, replace the part concerned.**
- **Replace seat belt (1) every 3 years regardless of appearance.**

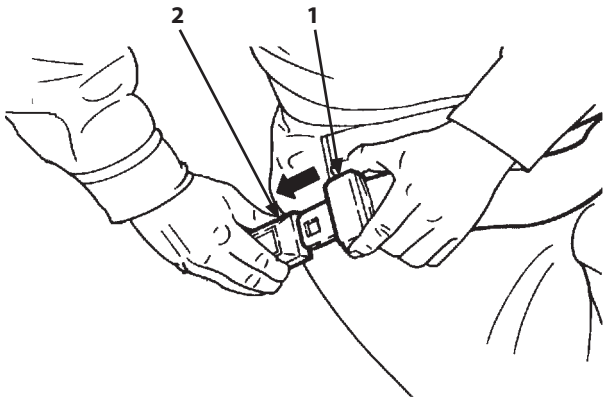

M1U1-01-031

Seat Belt

1. Confirm that seat belt (1) is not twisted. Securely insert the end of seat belt (1) into buckle (2). Lightly pull on the belt to confirm that the buckle latches securely.
2. Push button (3) on buckle (2) to unfasten seat belt (1).

Replace the seat belt if it is damaged or worn, or if the seat belt has external damage such as an accident.

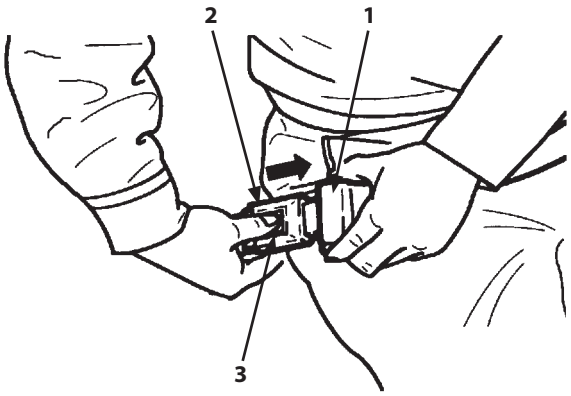

M1U1-01-032

BREAK-IN

Breaking in New Machine

IMPORTANT: Operating a new machine at full load without first breaking in can cause scratches and/or seizures, consequently affecting the service life of the machine. Thoroughly perform break-in operation.

The service life and performance of the machine can be greatly affected by operation and maintenance of the machine during the initial stage of operation. Perform break-in operation with the engine output less than 80% of the maximum output for the first 50 hours.

MEMO

Inspect Machine Daily Before Starting

Perform the required daily check before starting the engine.

- Refer to "Maintenance" section for detailed information.

Engine
- Level and contamination of engine oil and coolant
- Starting easiness, exhaust gas color, and noise
- Oil and water leaks, damage to hoses and pipe lines
- Clogging and damage to radiator and oil cooler
- Looseness and missing of mounting bolts and nuts

Upperstructure
- Fuel level, leaks and contamination of fuel in tank
- Hydraulic oil level, leaks and contamination of hydraulic oil tank
- Movement, play and operating force of all control levers
- Operation of all hydraulic components, oil leaks and damage to pipe lines and hoses
- Deformation, break and abnormal noise of upper structure
- Looseness and missing of mounting bolts and nuts
- Washer fluid

Undercarriage
- Sag, wear and break of crawler
- Oil leaks and wear on upper/lower rollers and front idlers
- Oil leaks from travel devices
- Looseness and missing of mounting bolts and nuts

Working Device
- Check cylinders, pipe lines and hoses for oil leaks and damages.
- Wear and damage of the bucket
- Check bucket teeth for looseness, wear and missing
- Lubrication state of the working device
- Check for pin anti-extraction pins, stoppers, rings and bolts for damage
- Looseness and missing of mounting bolts and nuts

Others
- Operation of instruments, switches, lights and buzzer/horn
- Function of parking brake
- Deformation and break of head guard
- Abnormal outside appearance of machine
- Wear and damage of the seat belt

Before Starting Engine

1. Confirm that pilot control shut-off lever (1) is in the LOCK position.
2. Confirm that all control levers are placed in neutral.
3. Insert key switch (2). Turn it to ON position. Press and hold switch (3) with the engine stopped.

IMPORTANT: Always check the machine on a firm, level surface. Never attempt to start the engine while checking the machine.

If engine oil level (4) (green) is displayed, the status is normal.

4. Adjust the seat to allow full pedal and control levers stroke with operator's back against the backrest. Fasten the seat belt.

NOTE: The monitor surface is a resin product. When the surface becomes dusty, lightly wipe the surface with a wet cloth. Never use an organic solvent.

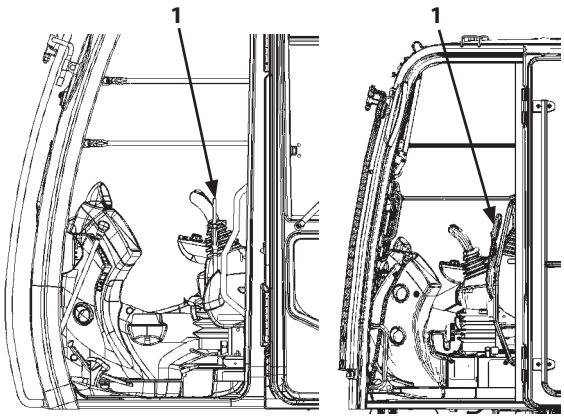

LOCK Position
ZX75US-5A

LOCK Position
ZX85USB-5A

MDED-03-001

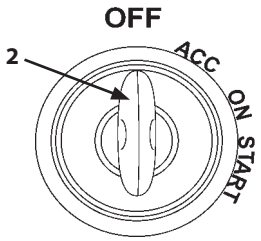

MDCD-01-030

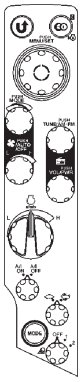

MDCD-01-026

Starting the Engine

Starting the Engine in Ordinary Temperature

1. Confirm that pilot control shut-off lever (1) is in the LOCK position.
2. Turn engine control dial (3) to the slow idle position.
3. Sound horn to alert bystanders
4. Insert key switch (2). Turn it to ON position.
5. "Wait-screen (nothing is displayed)" is displayed on the monitor for 2 seconds. Regardless of pilot control shut-off lever (1) position, the starter can not be cranked during this moment.
6. When the password input screen is displayed on the monitor, input the password. Unless the numeric keypad function (ignition block system) is activated, this screen is not displayed.

IMPORTANT: When required to activate the numeric keypad function (ignition block system), consult your nearest Hitachi dealer.

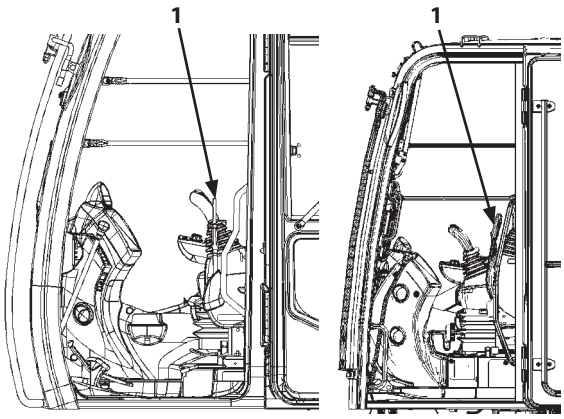

LOCK Position
ZX75US-5A

LOCK Position
ZX85USB-5A

MDED-03-001

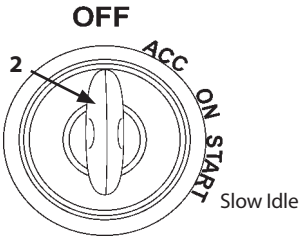

MDCD-01-030

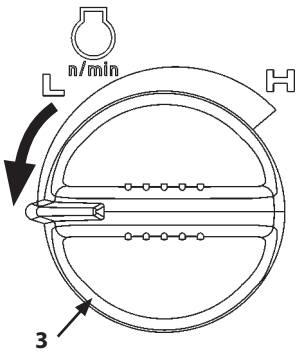

M1P1-01-068

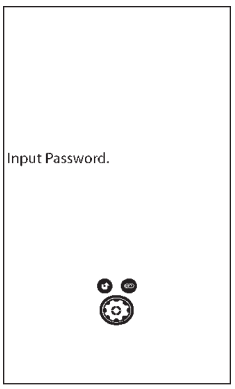

Password Input Screen

MDAA-01-085EN

NOTE: When the key switch is turned ON, the maintenance notification (4) for the item whose maintenance interval has expired displays for ten seconds. Press Return switch (5) or turn the pilot shut-off lever to UNLOCK position while the rear view camera is enable to delete the notification.

7. The basic screen will be displayed on the monitor. Check that the preheat indicator (6) is OFF at this time.
8. Turn the key switch to START position to rotate the starter. The engine will start.

IMPORTANT: Never operate the starter for more than 10 seconds at a time. If engine fails to start, return key switch to OFF. Wait for more than 30 seconds, then try again. Failure to do so may cause damage to the starter and/or discharging the batteries.

9. Release the key switch immediately after the engine has started. The key switch will automatically return to ON position.

NOTE:

- *White smoke may occur for several minutes after the engine start, this is not a malfunction.*

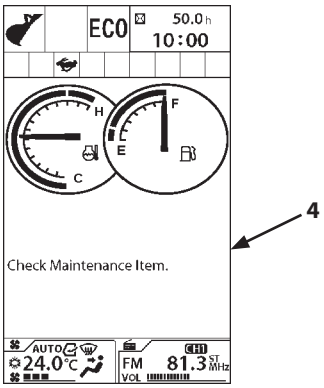

MDAA-01-213EN



MDCD-01-026

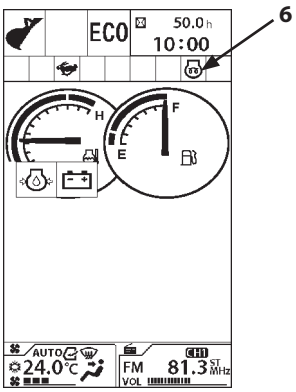

Basic Screen

MDEC-01-042

Starting in Cold Weather

Preheating

1. Confirm that pilot control shut-off lever (1) is in the LOCK position.
2. Turn engine control dial (3) to the middle between the L and H position.
3. Sound the horn to alert bystanders.
4. Insert key switch (2). Turn it to ON position.
5. "Wait-screen (nothing is displayed)" is displayed on the monitor for 2 seconds. Regardless of pilot control shut-off lever (1) position, the starter can not be cranked during this moment.
6. When the password input screen is displayed on the monitor, input the password. Unless the numeric keypad function (ignition block system) is activated, this screen is not displayed.

IMPORTANT: When required to activate the numeric keypad function (ignition block system), consult your nearest Hitachi dealer.

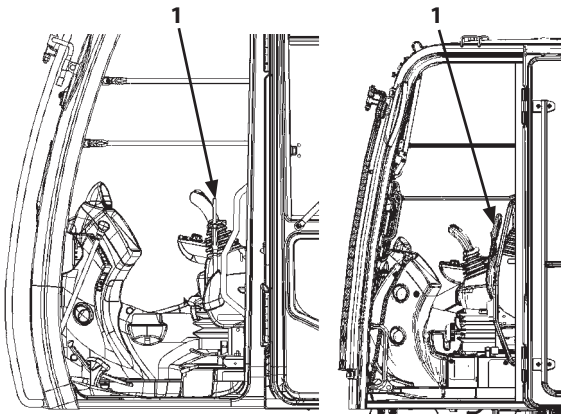

LOCK Position
ZX75US-5A

LOCK Position
ZX85USB-5A

MDED-03-001

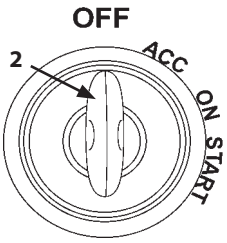

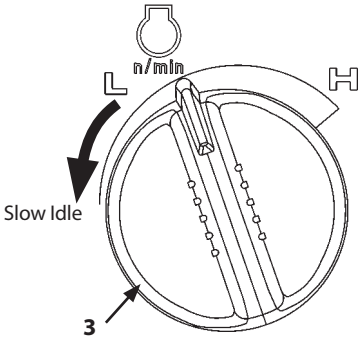

MDCD-01-030

M1P1-03-007

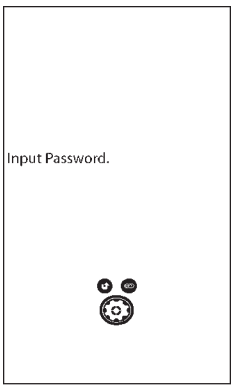

Password Input Screen

MDAA-01-085EN

NOTE: When the key switch is turned ON, the maintenance notification (4) for the item whose maintenance interval has expired displays for ten seconds. Press Return switch (5) or turn the pilot shut-off lever to UNLOCK position while the rear view camera is enable to delete the notification.

7. The basic screen will be displayed on the monitor. The machine will automatically check if preheating is required or not. When preheating is required, preheat indicator (6) is lit for automatically.

NOTE: In case, preheat indicator (6) does not come ON, preheating is not required. Follow the "Starting the Engine in Ordinary Temperature" section.

8. As soon as preheat indicator (6) goes OFF, turn the key switch to START position to rotate the starter.

IMPORTANT: Never operate the starter for more than 10 seconds at a time. If engine fails to start, return key switch to OFF. Wait for more than 30 seconds, then try again. Failure to do so may cause damage to the starter and/or discharging the batteries.

9. Release the key switch immediately after the engine has started. The key switch will automatically return to ON position.

NOTE:

- *White smoke may occur for several minutes after the engine start, this is not a malfunction.*

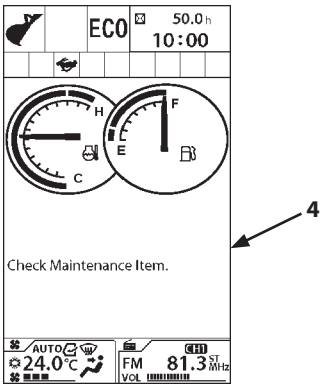

MDAA-01-213EN



MDCD-01-026

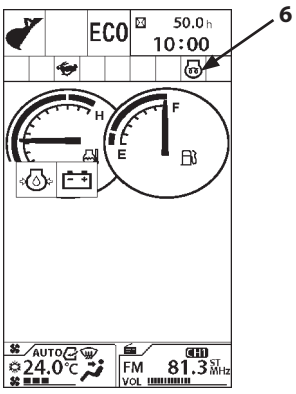

Basic Screen

MDEC-01-042

Check Instruments After Starting Engine

Checking instruments through monitor functions

After starting the engine, check the following points through the monitor functions.

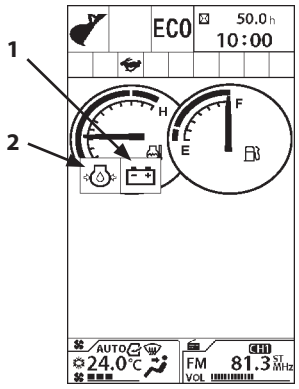

MDAA-01-041

1. Check that alternator alarm indicator (1) is OFF. In case alternator alarm indicator (1) stays ON, immediately stop the engine. Inspect the alternator and battery system for any abnormality.
2. Check that low engine oil pressure indicator (2) is OFF and the alarm buzzer does not sound.

   In case low engine oil pressure indicator (2) stays ON and the buzzer sounds, immediately stop the engine. Inspect the engine oil pressure system and the oil level.

IMPORTANT: In case any abnormality is found on the monitor unit, immediately stop the engine. Inspect the cause of the trouble.

Check engine noise and exhaust gas color:

Check that the engine noise and exhaust gas color is normal.

NOTE:

- *Check the exhaust gas color as follows. (After warm-up operation, run the engine with no loads.)*
  Clear : Normal (Perfect combustion)
  Black : Abnormal (Imperfect combustion, abnormal fuel system)
  White : Abnormal (Oil is leaking into the combustion chamber, abnormal fuel system)

- *White smoke may occur for several minutes after the engine start, this is not a malfunction.*

Using Booster Batteries



SA-032

WARNING:

- **An explosive gas is produced while batteries are in use or being charged. Keep open flames and sparks away from the battery area. Do not continue to use or charge the battery when electrolyte level is lower than specified. Explosion of the battery may result.**
- **Park the machine and a machine with the booster batteries on a dry or concrete surface, not on steel plates. If the machine is parked on steel plates, dangerous sparks may be unexpectedly created on the machine.**
- **Never connect a positive terminal to a negative terminal, as a dangerous short circuit will occur.**

IMPORTANT: The machine electrical system is a 24 volt negative (-) ground. Use only 24 volt booster batteries with sufficient capacity to start this machine.

When the machine batteries are exhausted, start the engine using booster batteries as shown below.

Connecting the booster batteries

1. Stop the engine of the machine on which booster batteries are mounted.
2. Connect one end of red cable (1) to the positive (+) terminal of the machine batteries, and the other end to the positive (+) terminal of the booster batteries.
3. Connect one end of black cable (2) to the negative (-) terminal of the booster batteries, and then connect the other end to the frame of this machine. In the last connection to frame, sparks may fly. Be sure to connect the cable end as far away from the machine batteries as possible.
4. After securely connecting the booster cables, start the engine of the machine on which booster batteries are mounted. Run the engine at a middle speed.
5. Start the engine of this machine.
6. After the engine starts, disconnect booster cables (2) and (1), following the procedure below.

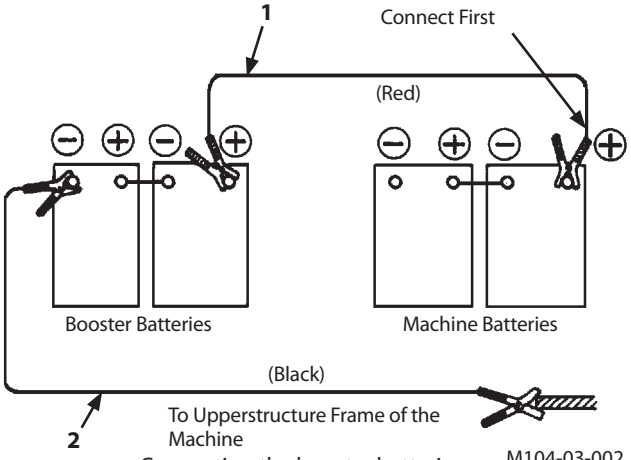

Connecting the booster batteries

M104-03-002

Disconnecting the booster cables

1. Disconnect black booster negative (-) cable (2) from the machine frame first.
2. Disconnect the other end of black booster negative (-) cable (2) from the booster batteries.
3. Disconnect red booster positive (+) cable (1) from the booster batteries.
4. Disconnect red booster positive (+) cable (1) from the machine batteries.

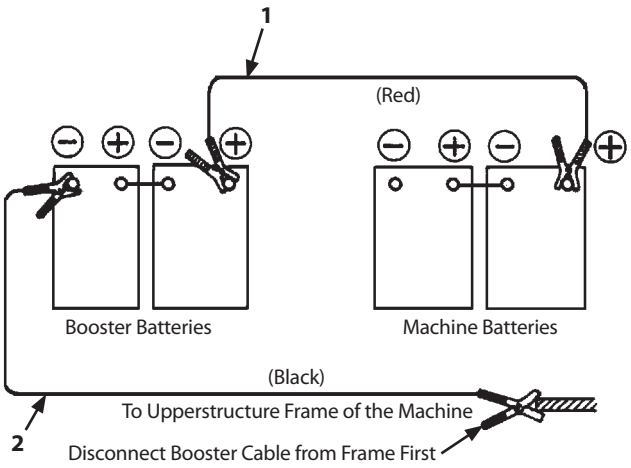

M104-03-002

Disconnecting the booster cables

Stopping the Engine

Engine Stop Procedure

1. Except for special cases, before stopping the engine, lower the bucket to the ground.
2. Pull pilot control shut-off lever (3) to LOCK position.
3. Turn engine control dial (1) to the slow idle position and run the engine for 5 minutes to cool the engine.
4. Turn key switch (2) OFF to stop the engine.

If the engine does not stop, even if the key switch is turned to the OFF position. (Emergency Stop)

In case the engine does not stop even if key switch (2) is turned OFF due to failure of the machine, move engine stop switch (4) downward to stop the engine. The engine will stop. Return engine stop switch (4) to its original position (upward).

CAUTION: Do not use engine stop switch (4) unless absolutely necessary. When the machine stops due to the machine failure, do not start the machine until repair is completed.



SA-390

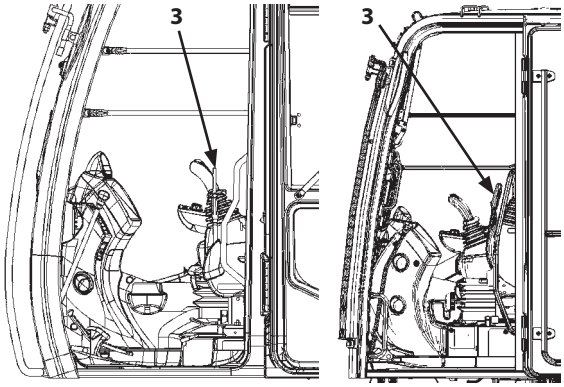

ZX75US-5A ZX85USB-5A

MDED-03-001

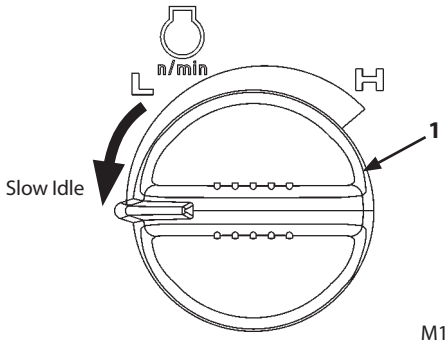

M1P1-01-068

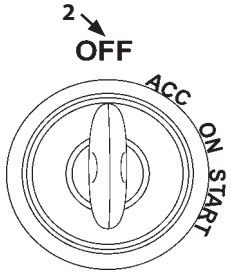

MDCD-01-030

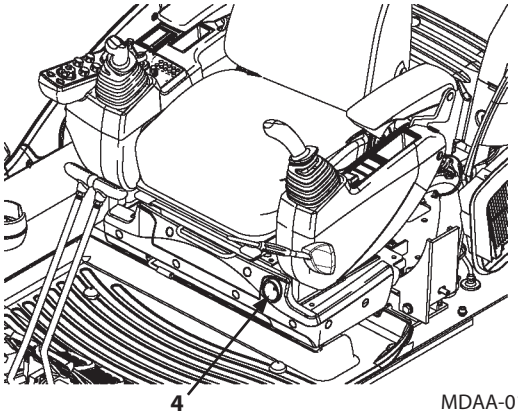

MDAA-01-290

Engine Auto-Stop in Extremely Low Temperature

WARNING: This function automatically stops the engine. Take extra care on the work and work environment when using this function.

Under -20 °C or lower environment, the engine will automatically stop 60 minutes after the pilot control shut-off lever is pulled to the LOCK position. 30 seconds before the engine stop, the monitor displays a message that engine will be stopped (1) and the indicator starts flashing. Also the buzzer sounds. The buzzer sounds once at 30 seconds before, continuously sounds from 15 seconds. The engine speed decreases to the idling speed, and then stops after 15 seconds. When the control shut-off lever is pushed down before stopping the engine, the auto shut-down is disabled and the engine will not stop.

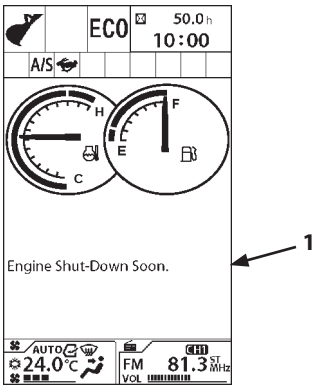

MDAA-01-146EN

IMPORTANT: When the engine stops, turn the key switch to ACC or OFF once and then turn it to START to restart the engine. In the case the engine stops automatically, turn the key switch OFF before leaving the machine for long period of time. Do not leave the machine after auto shut-down. Failure to do so may discharge the batteries.

NOTE: The engine can stop automatically when related conditions are met regardless of the auto shut-down function ON or OFF.

MEMO

Travel Levers and Pedals

Travel operation can be performed with either the levers or pedals.

WARNING: In the standard travel position, the front idlers are positioned at the front of the machine and the travel motors at the rear. If the travel motors are positioned at the front of the machine, the control actions of the travel pedals will be reversed. Be sure to confirm the position of the travel motors before traveling.

NOTE:

- *An arrow-mark seal is stuck on the inside surface of the side frame to indicate the machine front direction.*
- *Travel lever dampers are provided for smooth control. In extremely cold weather (lower than -20 °C (-68 °F)), the travel lever (or pedal) will become heavy to operate. This is caused by increase in oil viscosity which is not abnormal.*

- Forward/Reverse Travel
  Move both levers (or pedals) forward together to travel forward.
  Pull the levers (or pedals) back together to travel in reverse. The travel speed can be controlled by adjusting the lever (or pedal) operating stroke.

- Ascending/Descending Slopes
  The machine gradeability is 35° (70 %). Slowly operate the travel levers (or pedals) when descending a slope. When the travel levers are placed in neutral, the travel brakes are automatically applied to stop the machine.

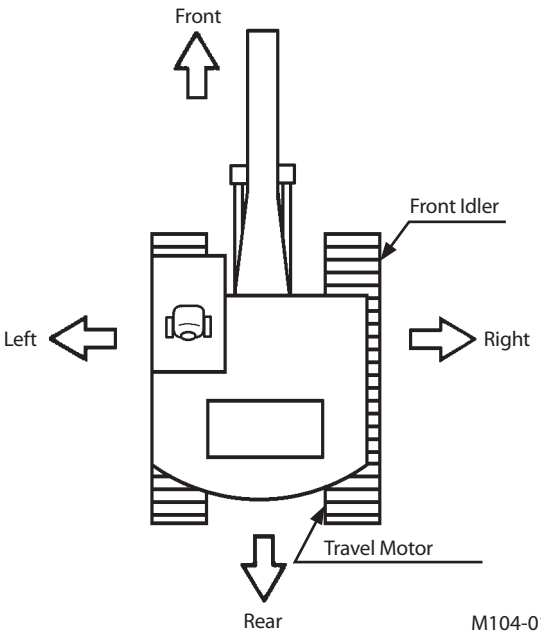

M104-01-038

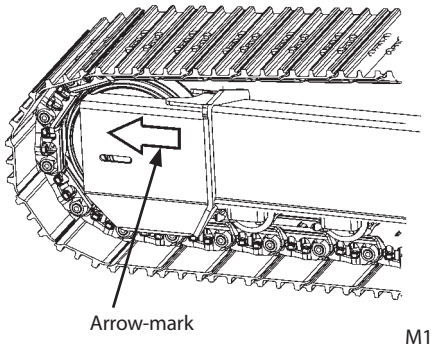

M178-03-001

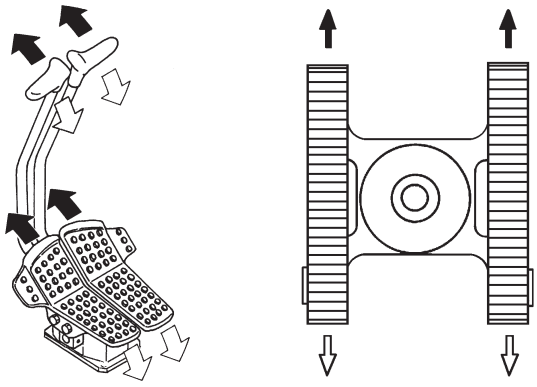
Forward and Reverse
M104-04-009
M104-04-003

- Pivot Turn
  Steer the machine by driving only one side crawler. Operate either of the travel levers (or pedals).

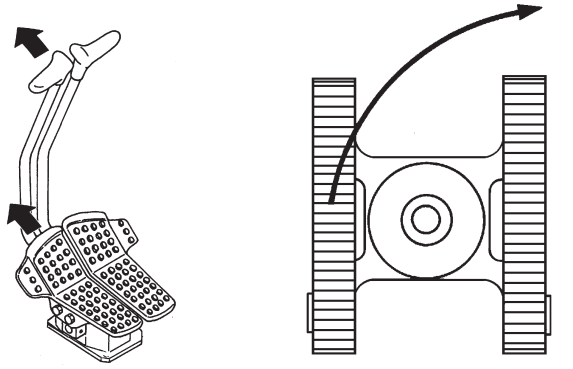

Pivot Turn

M104-04-010
M104-04-005

- Spin Turn
  Steer the machine in a position by driving both side crawlers in opposite directions each other. Push one lever (or pedal) forward and pull the other back at the same time.

WARNING: During pivot or spin turn machine operations, the base machine may shake. When turning the machine in a tight area, slowly operate the machine while taking care not to allow the machine to come in contact with the surrounding objects.

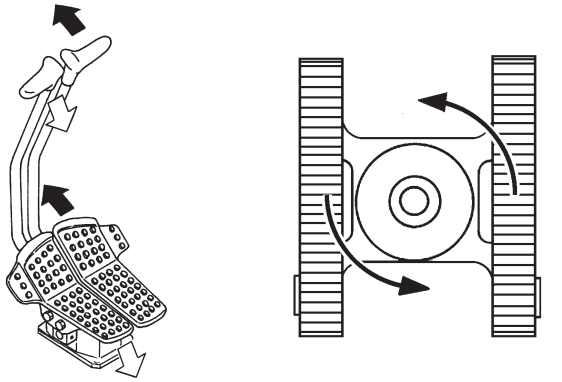

Spin Turn

M104-04-011
M104-04-007

Travel Mode Switch

WARNING: Tipping-over accidents can cause serious personal injury. Do not change travel mode switch (1) while traveling; especially, changing to fast mode (2) when descending slopes will create a very dangerous situation. Always stop the machine before changing the travel speed mode.

Turn travel mode switch (1) on the switch panel to the specified position to select the travel mode (Fast/Slow).

- Fast Mode: Turn travel mode switch (1) to mark (2) position.
- Slow Mode: Turn travel mode switch (1) to mark (3) position.

Mark (Fast Speed Mode)
Mark (Slow Speed Mode)

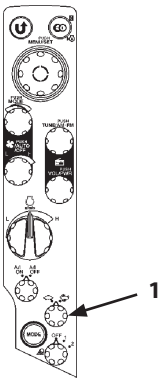

MDCD-01-026

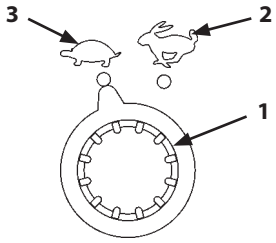

MDCD-01-028

Travel Alarm (Optional)

During travel operation, the travel alarm sounds to warn the people near the machine that the machine is traveling.

Deactivating Travel Alarm

More than 12 seconds after starting to travel the machine, raise the armrest and push travel alarm deactivation switch (4) to stop the travel alarm. (Within 12 seconds, the travel alarm deactivation switch is inoperable.)
Once the machine stops traveling and when restarting to travel, the travel alarm will sound again. If desired to stop the alarm, operate travel alarm deactivation switch (4) once more.

NOTE: The optional switch locations differ depending on what kinds of optional devices are equipped. Before using the switches, make sure what kinds of optional devices are equipped.

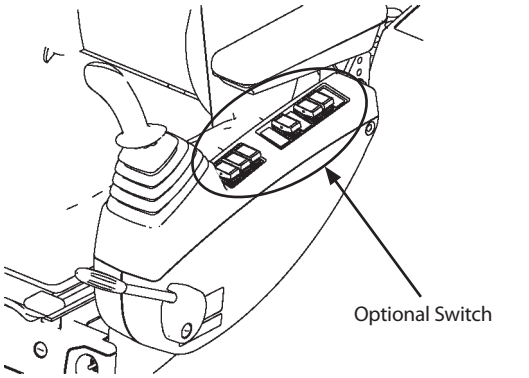

ZX75US-5A T1V1-05-02-004

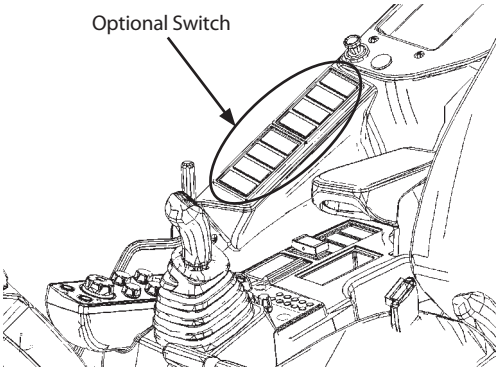

ZX85USB-5A MDED-01-006

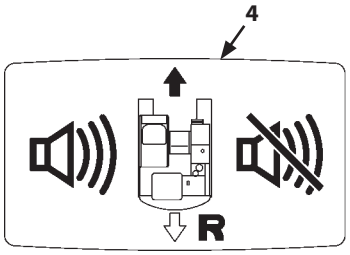

M1U1-01-035

Traveling

CAUTION: Use a signal person when moving, swinging or operating the machine in congested areas. Coordinate hand signals before starting the machine.

- Before moving machine, determine which way to move travel pedals/levers for the direction you want to go. An arrow-mark seal is stuck on the inside surface of the side frame to indicate the machine front direction.
- Select a travel route that is as flat as possible. Steer the machine as straight as possible, making small gradual changes in direction.
- Before traveling on them, check the strengths of bridges and road shoulders, and reinforce if necessary.
- Use wood plates in order not to damage the road surface. Be careful of steering when operating on asphalt roads in summer.
- When crossing train tracks, use wood plates in order not to damage them.
- Do not make contact with electric wires or bridges.
- When crossing a river, measure the depth of the river using the bucket, and cross slowly. Do not cross the river when the depth of the river is deeper than the upper edge of the upper roller.
- When traveling on rough terrain, reduce engine speed. Select slow travel speed. Slower speed will reduce possible damage to the machine.
- Avoid operations that may damage the track and undercarriage components.
- During freezing weather, always clean snow and ice from track shoes before loading and unloading machine, to prevent the machine from slipping.



M104-05-008

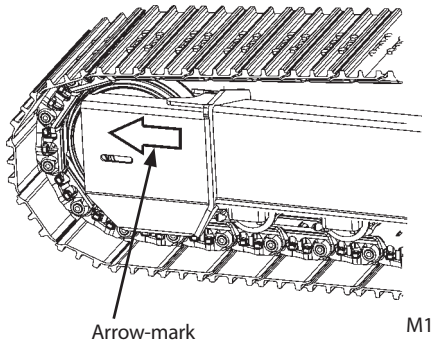

M178-03-001



SA-011

Traveling on Soft Ground

Avoid traveling on soft ground as much as possible. If traveling on a soft ground is unavoidable, carefully operate the machine while observing the following points.

- Drive the machine as far as the machine can move by own propelling power. Towing the machine may become necessary. Do not drive the machine to a deeper location than towing machine is possible.
- In case it becomes impossible for the machine to travel by own propelling power, lower the bucket to the ground. While supporting the machine weight with the boom and the arm, slowly pull the arm to evacuate the machine. Operate the boom, arm, and travel levers simultaneously at this time to prevent the machine from being loaded abnormally.
- If the track frame bottom comes in contact with the ground, or if mud and/or grabbles are tightly packed into the undercarriage, the machine may become impossible to travel. Raise one side track above the ground with the boom and arm extended, remove mud and/or grabbles from the track. Then, evacuate the machine. Rotate the raised track in forward or reverse directions alternately to remove the packed rocks and/or mud from the track.
- Tow the machine with other machine if the machine becomes stuck in soft ground and impossible to evacuate by own propelling power. Refer to the descriptions for TOWING MACHINE for the correct usage of wire ropes.

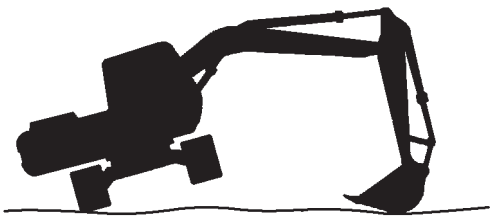

M104-05-012

Raise One Track Using Boom and Arm

WARNING: Operate the machine carefully. The machine may slide. Keep the angle between boom and arm 90 to 110° and position the bucket's round side on the ground.

1. Swing the upperstructure 90°.
2. Position the boom and the arm so that the angle between them becomes to 90 to 110°. Push the ground with the round bucket bottom to raise track off ground.
3. Place blocks under machine frame to support the machine.

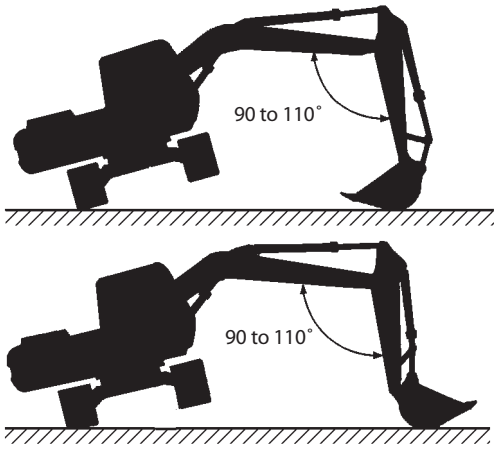

M104-05-013

IMPORTANT: When the machine is modified as a face shovel by installing the hoe bucket in reverse, avoid raising the machine above the ground using the front attachment with the bucket cylinder fully extended. Excessive loads will be applied to the pins around the bucket and the bucket cylinder, resulting in breakage of the pins.



MZX5-04-003

Towing Machine

CAUTION: Cables, straps, or ropes can break causing serious injury. Do not tow machine with damaged chains, frayed cables, slings, straps, or wire ropes. Always wear gloves when handling cable, straps or wire ropes.

When your machine becomes struck but the engine is still operational, attach wire ropes to the machine as illustrated at right, and slowly tow your machine to firm ground using another machine.
Be sure to attach the wire ropes around the track frames of both machines as illustrated.
To prevent the wire ropes from being damaged, place some protective material between the track frame and the wire ropes.

IMPORTANT:

- **A center shackle hole on the track frame is provided to pull only lightweight objects. The shackle holes on the bottom of the track frame are used to secure the machine for transportation.**
- **Do not use the shackle holes on the track frame for towing the machine.**
- **Refer to page 5-19 "Shackle Hole Usage" for using the center shackle hole appropriately.**

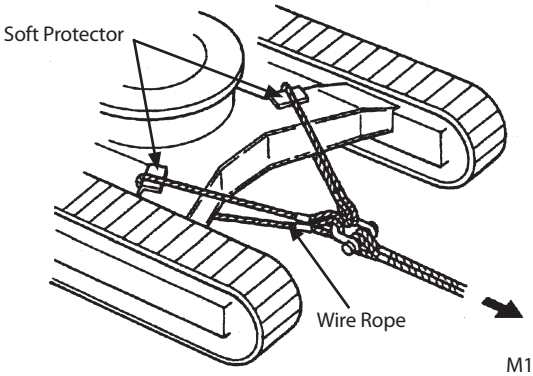

M104-05-010

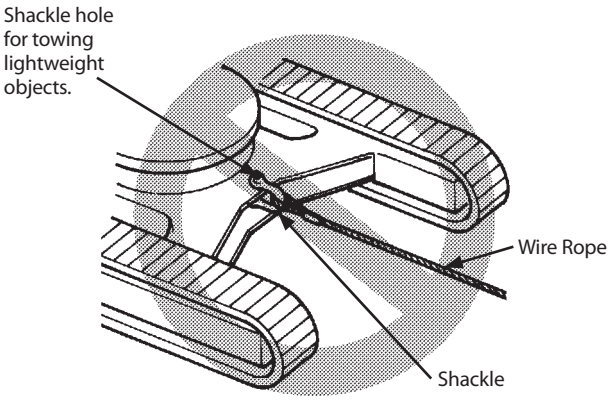

MZX5-04-004

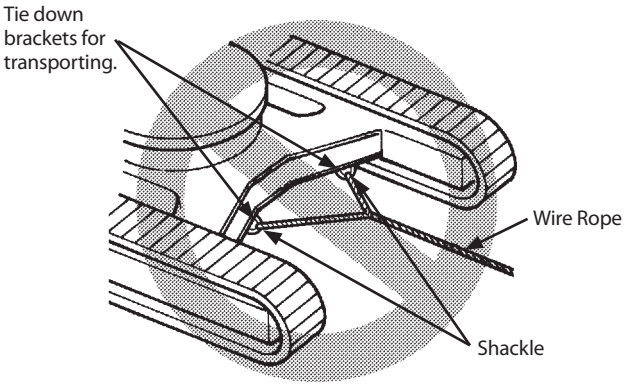

MZX5-04-005

Operating in Water or Mud

The machine can be operated in water up to the upper edge of the upper rollers only if worksite footing has sufficient strength to prevent the machine from sinking past the upper edge of the upper roller, and only if the water is flowing slowly.

When operating in such conditions, check the machine's position often. Reposition the machine if necessary.

Avoid submerging the swing bearing, swing gears and center joint.

IMPORTANT: If the swing bearing, swing gears and center joint are submerged in water or mud by mistake, premature wearing on parts such as the swing bearing may result. Grease must be changed or overhauling will be required immediately. Stop operating the machine as soon as possible, and contact your authorized dealer.

Lubricate swing bearing. (See Maintenance Guide, 500 hours)

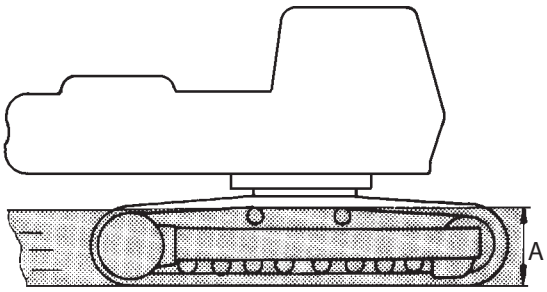

M104-05-009

Model	A
ZX75US-5A, 85USB-5A	560 mm (22 in)

Precautions for Traveling on Slopes

CAUTION: Avoid possible injury from traveling on slopes. Tipping over or skidding down of the machine may result. Thoroughly read and understand precautions below and be sure to travel at slow speed on slopes. Never attempt to travel on slopes with the bucket loaded or any load suspended by the bucket.

- Never attempt to ascend or descend 30 degrees or steeper slopes.
- Be sure to fasten the seat belt.
- Keep the bucket pointed in the direction of travel, approximately 200 to 300 mm (8 to 12 in) (A) above the ground. If the machine starts to skid or becomes unstable, lower the bucket immediately.
- Driving across the face of a slope or steering on a slope may cause the machine to skid or turnover. If the direction must be changed, move the machine to level ground, then, change the direction to ensure safe operation.
- Avoid swinging the upperstructure on slopes. Never attempt to swing the upperstructure downhill. The machine may tip over. If swinging uphill is unavoidable, carefully operate the upperstructure and boom at slow speed.
- If the engine stalls on a slope, immediately lower the bucket to the ground. Return the control levers to neutral. Then, restart the engine.
- Be sure to thoroughly warm up the machine before ascending steep slopes. If hydraulic oil has not warmed up sufficiently, sufficient performance may not be obtained.

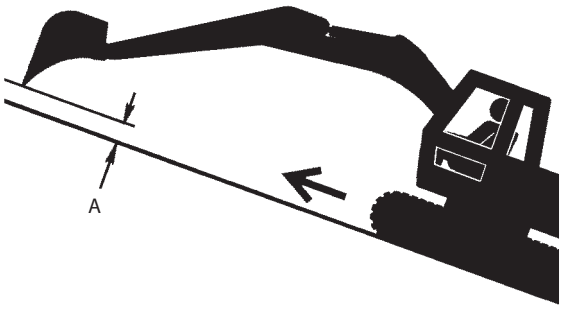

SA-657

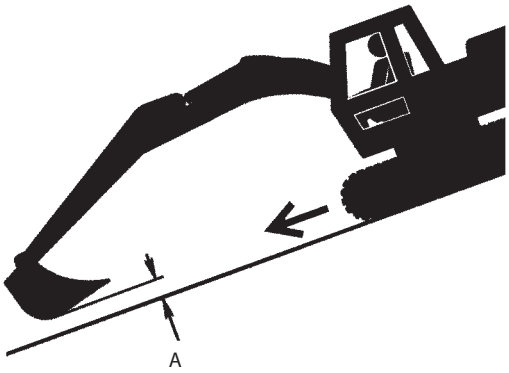

SA-658

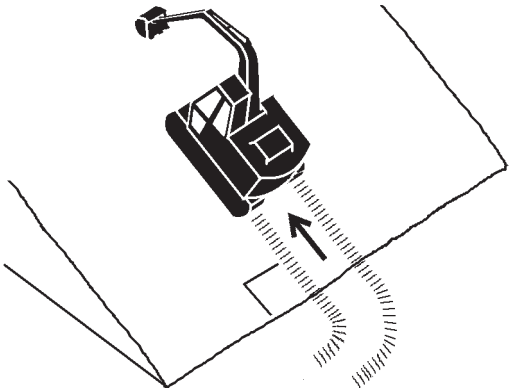

SA-441

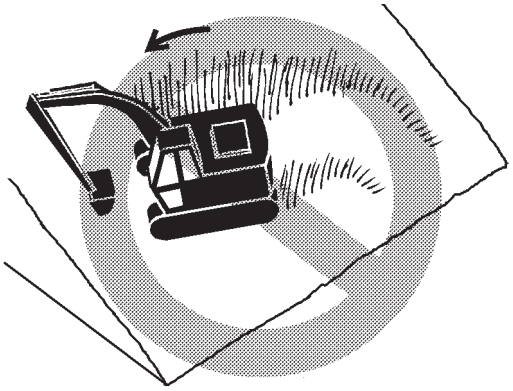

MZX5-04-002

Parking the Machine on Slopes

WARNING: Avoid parking and/or stopping machine on slopes. The machine may tip over, possibly resulting in personal injury.

If parking the machine on a slope is unavoidable:

- Thrust the bucket teeth into the ground.
- Return the control levers to neutral and pull pilot control shut-off lever (2) to the LOCK position.
- Block both tracks.

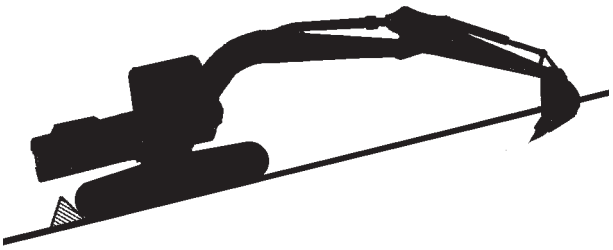

M104-05-014

Parking the Machine

1. Park the machine on a level surface.
2. Lower the bucket to the ground.
3. Turn the auto-idle switch off.

IMPORTANT: Turbocharger may be damaged if the engine is not properly shut down.

4. Turn engine control dial (1) counterclockwise to the stop (the slow idle position). Run the engine at slow idle speed for approximately 5 minutes to cool the engine.
5. Turn the key switch to OFF. Remove the key from the key switch.
6. Pull pilot control shut-off lever (2) to the LOCK position.

IMPORTANT: Protect cab electrical components from bad weather. Always close windows, roof vent and cab door when parking the machine.

7. Close windows, roof vent, and cab door.
8. Lock all access doors and compartments.

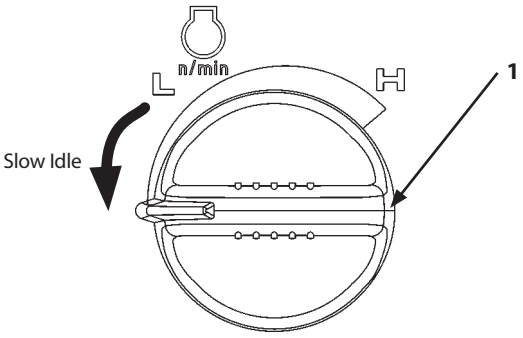

M1P1-01-068

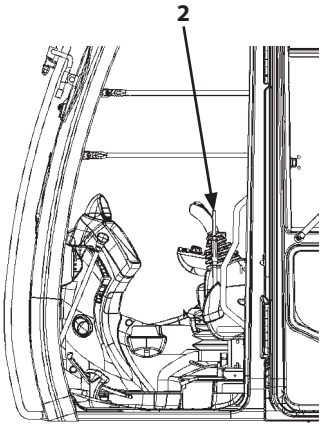

LOCK Position
ZX75US-5A

MDCN-01-008

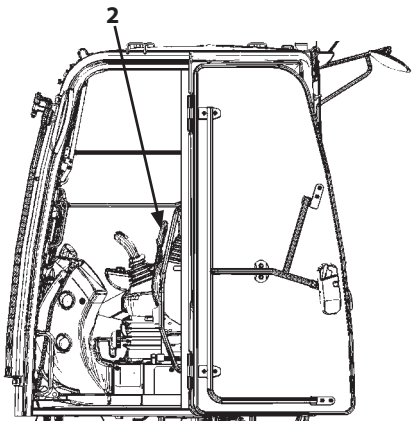

LOCK Position
ZX85USB-5A

MDED-01-010

MEMO

Control Lever (ISO Pattern)

WARNING:

- **Never place any part of body beyond window frame. It could be crushed by the boom if boom control lever is accidentally bumped or otherwise engaged. Never remove the window sash bar.**
- **Make sure you know the location and function of each control before operating.**
- **Do not change the control lever operation pattern. Failure to do so may result in operation mistake of the machine.**

A label showing the control patterns of the levers and pedals is attached on the right side in the cab.

When a lever is released, it will automatically return to neutral, and that machine function will stop.

1- Arm Roll-Out
2- Arm Roll-In
3- Swing Right
4- Swing Left
5- Boom Lower
6- Boom Raise
7- Bucket Roll-In
8- Bucket Roll-Out

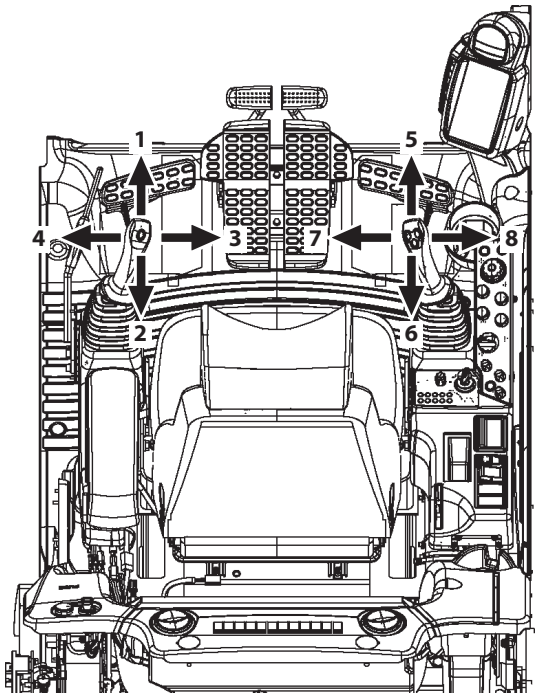

MDAA-01-288

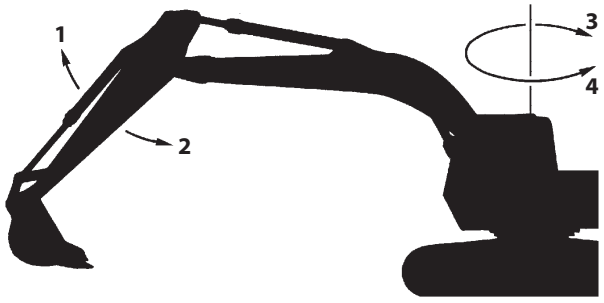

M104-05-001

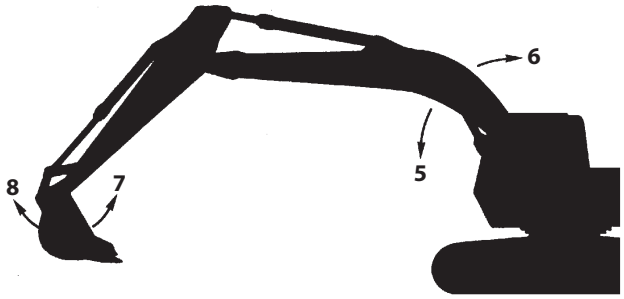

M104-05-002

Pilot Control Shut-Off Lever

Pilot control shut-off lever (1) functions to prevent misoperation of the machine from occurring if the control levers are accidentally moved when leaving the operator's seat or when entering the cab.

WARNING:

- **Always pull pilot control shut-off lever (1) into the full LOCK position. Unless pilot control shut-off lever (1) is fully moved to the LOCK position, the front control lever is not locked, possibly creating a hazardous situation.**
- **Be sure not to touch control lever (2) when operating pilot control shut-off lever (1). Failure to do so may allow the machine to unexpectedly move when a body part unintentionally comes in contact with the control lever, possibly resulting in serious personal injury or death.**
- **When leaving the machine, always stop the engine. Then, pull pilot control shut-off lever (1) up to the LOCK position.**
- **Always check to be sure that pilot control shut-off lever (1) is pulled up to the LOCK position before transporting the machine or leaving the machine at the end of the shift.**

Before Leaving the Machine

1. Park the machine on a firm, level surface. Lower the bucket to the ground. Return all control levers to neutral. Properly shut down the engine.
2. Pull pilot control shut-off lever (1) up into the full LOCK position.

Before Starting Operation:

Confirm that pilot control shut-off lever (1) is pulled up to the LOCK position before starting the engine. The engine will not start in other than the LOCK position.
Slowly push down pilot control shut-off lever (1) to UNLOCK position before starting operation.
Confirm that all control levers and pedals are in neutral and that no part of the machine is in motion.

WARNING: If any part of the machine (any actuator) moves when pilot control shut-off lever (1) is lowered to the UNLOCK position despite the fact that all controls are placed in neutral, the machine is malfunctioning. Immediately pull pilot control shut-off lever (1) back to the LOCK position, and stop the engine. Then, see your authorized dealer.

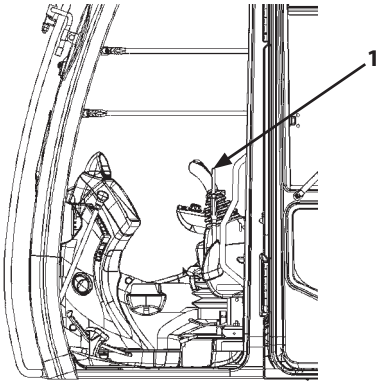

LOCK Position
ZX75US-5A
MDCN-01-008

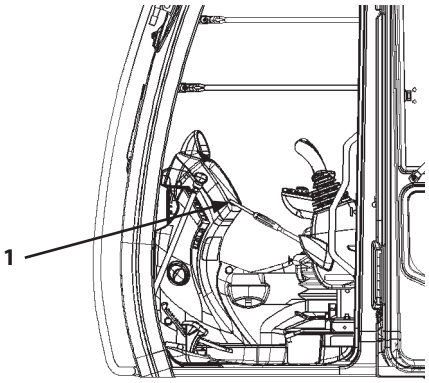

UNLOCK Position
ZX75US-5A
MDCN-01-009

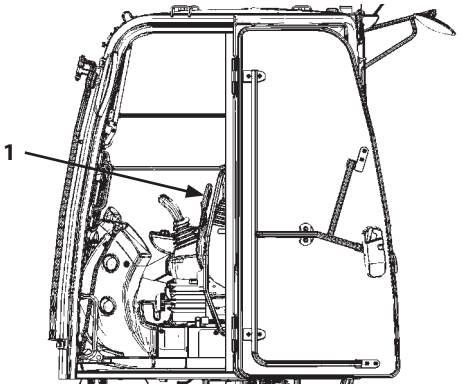

LOCK Position
ZX85USB-5A
MDED-01-010

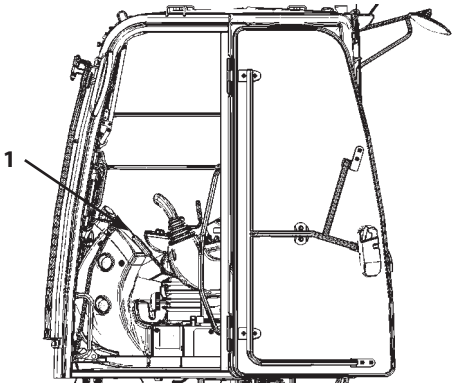

UNLOCK Position
ZX85USB-5A
MDED-01-011

Blade Lever

Use blade lever (1) on the operator's right to raise and lower the blade.

When the lever is released, it automatically returns to neutral, keeping the blade in its position until the lever is operated again.

1- Blade Lever

2- Blade Raise

3- Neutral

4- Blade Lower

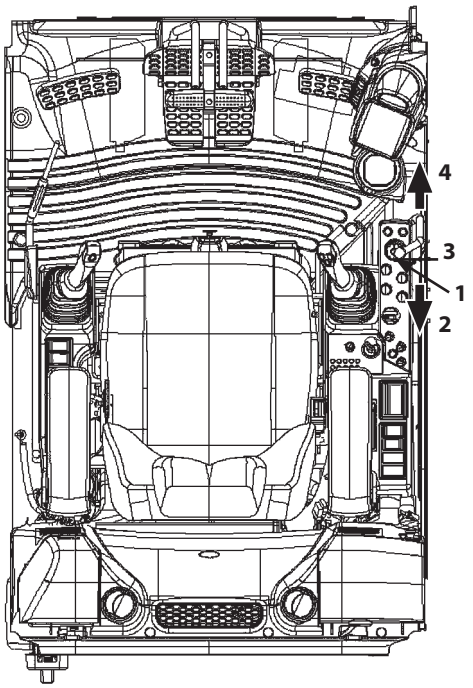

MDCN-13-001

Precautions for Blade Operation

This blade is designed as a light service attachment for the hydraulic excavator. Please keep the following points in mind:

1. This blade is designed to be used for dozing work only. Do not attempt to dig deeply with the blade. Doing so will damage not only the blade but the undercarriage as well.
2. Do not apply intensive or uneven loads. Never apply high-speed impact to the blade by running the machine into a load.
3. Jacking up the machine with this blade, the surface beneath the blade comes under high pressure, increasing the risk of surface collapse.

   Always be sure that the surface is strong enough to support the weight of the machine during operation.

   Avoid dangerously uneven distribution of weight on the blade by maintaining even contact between the blade and the ground.
4. Never use this blade as an outrigger.
5. Avoid contact between the bucket and the blade while digging.



M155-14-008

Warming Up Operation

In cold weather, warm up the machine until coolant and hydraulic oil temperature increases to the appropriate operating temperature.

IMPORTANT: The appropriate hydraulic oil operating temperature on this machine is 50 to 80 °C. Hydraulic components may be seriously damaged if the machine is operated with low temperature hydraulic oil. In case warming up the machine by relieving the hydraulic system, continuously relieve the relief valve for 10 to 15 seconds while taking a pause for 5 to 10 seconds.

1. Turn engine control dial (1) to the slow idle position.

   (Do not operate the machine until the needle of coolant temperature gauge (2) starts swinging.)

2. After the needle of coolant temperature gauge (2) starts swinging, turn engine control dial (1) to approx. Medium position.
3. Operate the boom, arm and bucket cylinders slowly to each stroke end several times. If the machine equipped with various attachments, operate the attachment function slowly to allow hydraulic oil to circulate through the system.
4. Operate the travel and swing functions slowly to allow hydraulic oil to circulate through the systems.
5. Warming up operation ends after the above operation is completed.

NOTE: The warm-up system automatically operates after keeping slow idle speed, and the engine speed will temporarily increase even if engine control dial (1) is in the slow idle position.

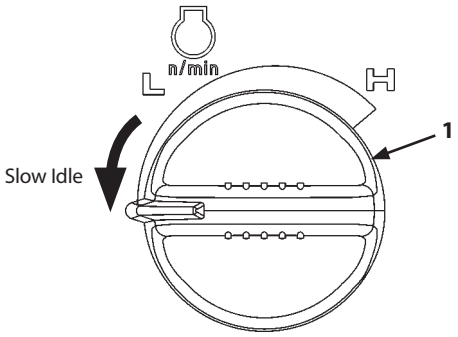

M1P1-01-068

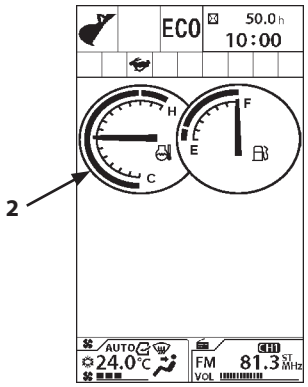

MDAA-01-001EN

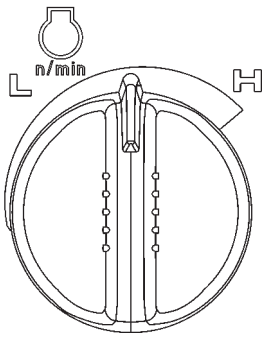

M1P1-05-003

Engine Speed Control

Increase and decrease the engine speed using engine control dial (1) located on the switch panel, as illustrated.

- Turn engine control dial (1) clockwise to increase the engine speed. Turn engine control dial (1) counterclockwise to decrease the engine speed.
- Note that the auto-idle function will be deactivated if engine control dial (1) is operated while the engine is running at the auto-idle setting.
- Before stopping the engine, always turn engine control dial (1) counterclockwise to the stop (to the slow idle setting). Run the engine five minutes to cool the engine. Then, turn the key switch to OFF position to stop the engine.

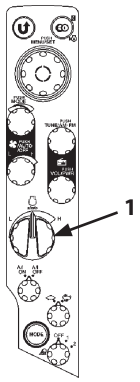

MDCD-01-026

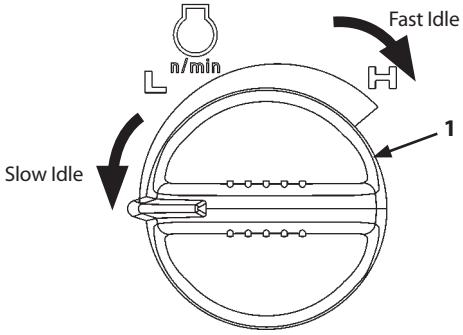

M1P1-01-068

Auto-Idle

Auto-Idle Function

With auto-idle selector (3) turned to the A/I ON position, approximately 4 seconds after all control levers are returned to neutral, the engine speed decreases to the auto-idle setting to save fuel consumption.
The engine speed will immediately increase to the speed set by engine control dial (2) when any control lever is operated.

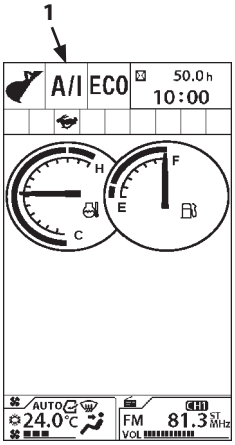

MDED-01-314EN

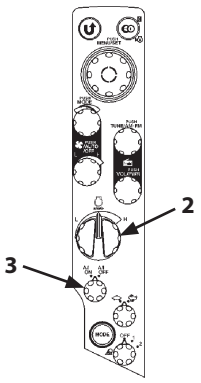

MDCD-01-026

WARNING:

- **Prevent the machine from unexpected movement. Be sure to turn auto-idle selector (3) to the A/I OFF position when unexpected machine movement is undesirable, especially when loading/unloading the machine for transportation.**
- **Always be aware of engine control dial (2) setting when auto-idle selector (3) is turned to the A/I ON position. If the engine speed is set high with engine control dial (2), and if the operator is not aware of the high engine speed setting, the engine speed will unexpectedly increase when any control lever is operated, causing unexpected machine movement, thus possibly resulting in serious personal injury.**

IMPORTANT: Always check if auto-idle indicator (1) is turned ON or OFF before starting operation. If the indicator is ON, the auto-idle function will be activated.

NOTE: Auto-idle control may not work completely until the end of the warm-up.

Auto-Idle ON/OFF

Note that auto-idle function can be turned ON or OFF by using auto-idle selector (3) only when the key switch is in ON position.
Always check if the auto-idle function is turned ON or OFF with auto-idle indicator (1).

Auto-Idle Indicator (1) ON	:	Auto-Idle Function ON
Auto-Idle Indicator (1) OFF	:	Auto-Idle Function OFF

- When auto-idle selector (3) is turned OFF with auto-idle indicator (1) ON, indicator (1) will go OFF and the auto-idle system is deactivated.
- Even if the engine is stopped by turning the key switch with auto-idle selector (3) in the A/I ON position [indicator (1) ON], the auto-idle system is not deactivated. When the engine is restarted, the auto-idle system remains activated, allowing auto-idle indicator (1) to flash for 10 seconds and stay ON later.

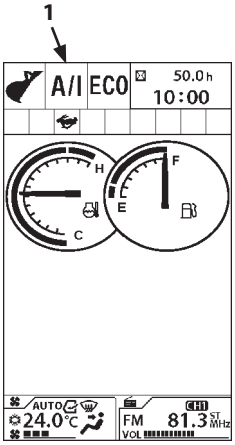

MDED-01-314EN

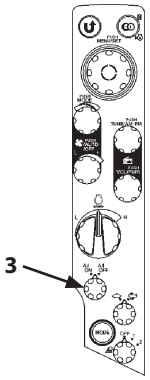

MDCD-01-026

Auto Shut-Down

WARNING: This function automatically stops the engine. Take extra care on the work and work environment when using this function.

When the auto shut-down function is turned ON, the engine automatically stops after the preset time at the state in which the pilot control shut-off lever is pulled. 30 seconds before the engine stop, monitor (2) displays a message that engine will be stopped and indicator (1) starts flashing. Also the buzzer sounds. The buzzer sounds once at 30 seconds before, continuously sounds from 15 seconds. The engine speed decreases to the idling speed, and then stops after 15 seconds. When the pilot control shut-off lever is pushed before stopping the engine, the auto shut-down is disabled and the engine will not stop.

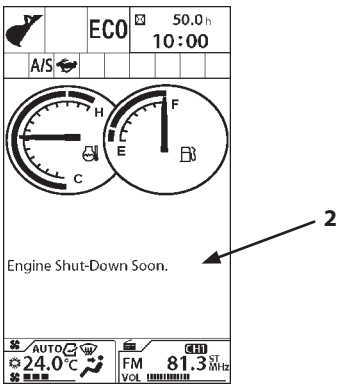

MDAA-01-146EN

IMPORTANT: Ensure that the ON or OFF status of auto shut-down indicator (1). If the indicator is ON, the auto shut-down function will be activated.

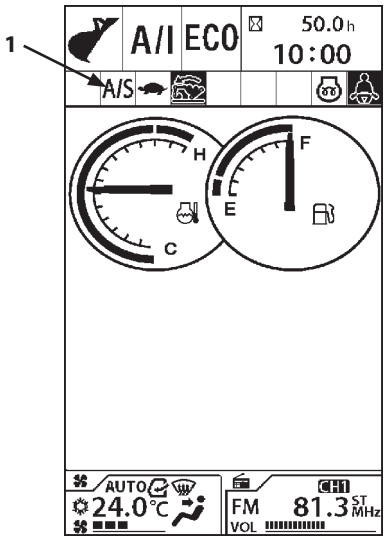

MDED-01-505

Operating Condition

- The engine is running.
- The pilot control shut-off lever is in the LOCK position.
- Coolant and hydraulic oil temperature are not high.

IMPORTANT:

- **When the engine stops by the auto shut-down function, turn the key switch to ACC or OFF once and then turn it to START to restart the engine. Do not leave the machine after auto shut-down. Failure to do so may discharge the batteries.**
- **When the key switch is turned to OFF position while the auto shut-down function is ON, the setting will be reset. When it is required to keep the setting, consult your nearest Hitachi dealer.**

IMPORTANT:

- **When the auto shut-down activates, the air conditioner will also stop.**

Setting the Auto Shut-Down Function

Auto Shut-Down: On/Off

1. Press selector knob (2) while displaying Basic Screen (1) to display Main Menu screen (3).
2. Rotate selector knob (2) to highlight Setting Menu (4).
3. Press selector knob (2) to display Setting Menu screen (5).
4. Rotate selector knob (2) to highlight Auto Shut-Down (6).

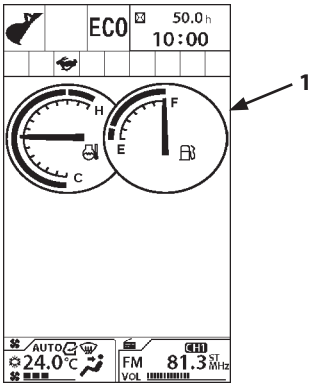

MDAA-01-001EN

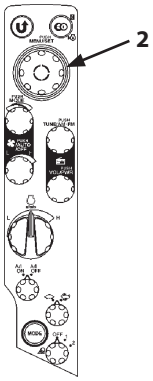

MDCD-01-026

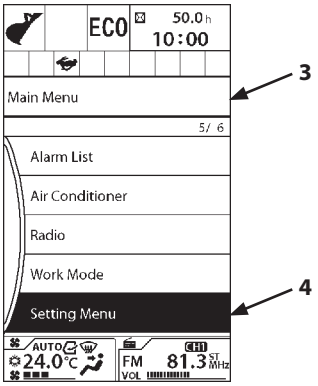

MDAA-01-114EN

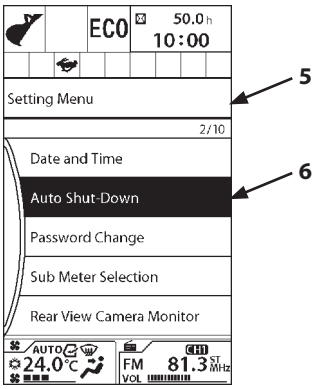

MDED-01-147EN

5. Press selector knob (2) to display Auto Shut-Down screen (7).

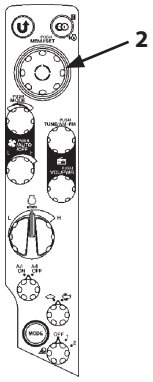

MDCD-01-026

6. Rotate selector knob (2) to highlight ON (8).
7. Press selector knob (2) to display Auto Shut-Down screen (7). Press selector knob (2) again to turn the auto shut-down function OFF.

NOTE: When the function is ON, the mark "■" (11) is displayed in green. When the function is OFF, the mark "■" (11) is displayed in gray.

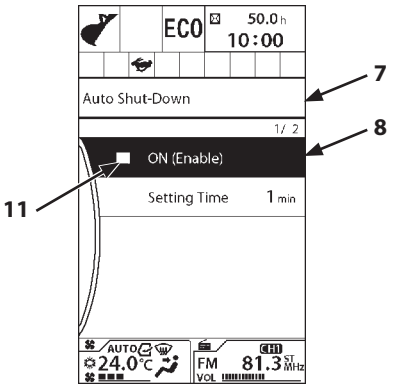

MDAA-01-148EN

Acting Time Setting

1. On the Auto Shut-Down screen, rotate selector knob (2) to highlight Time (9).
2. Push selector knob (2). Rotate selector knob (2) to adjust the auto shut-down acting time.
3. Press selector knob (2) to make the change.

NOTE: 30 seconds before the engine stop, the monitor will display "Engine Shut-Down Soon." message (10).

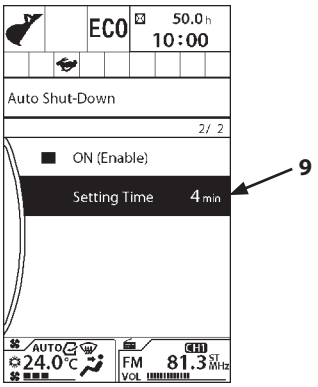

MDAA-01-150EN

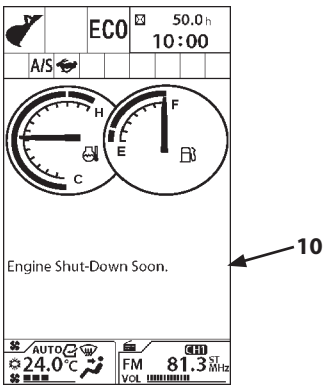

MDAA-01-146EN

Power Mode

Two engine speed modes, ECO and PWR modes are selected by operating the mode switch (1).

ECO (Economy) Mode

Operate the machine in this mode when performing normal work.
ECO is displayed on Power Mode Display (2).

PWR (Power) Mode

Use PWR (Power) mode when extra horsepower is needed.
PWR is displayed on Power Mode Display (3).

NOTE: ECO mode is set automatically when starting the engine. Set PWR mode if necessary.

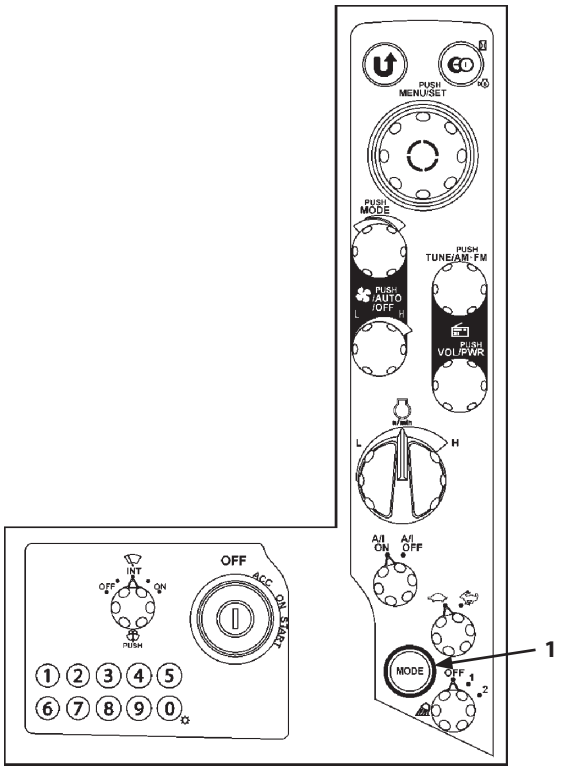

MDCD-01-027

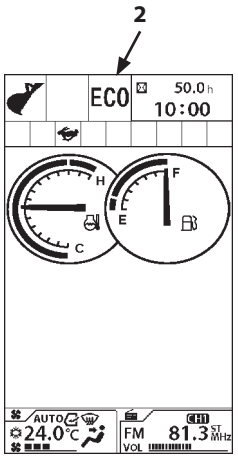

MDAA-01-001

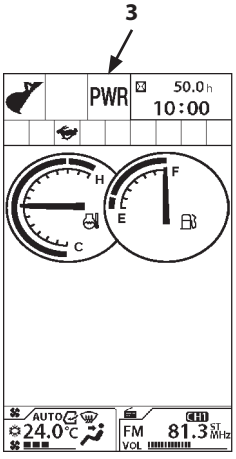

MDAA-01-353

Operating Backhoe

- Use the appropriate arm and bucket for the work. (Refer to the "Bucket Types and Applications" in the Specifications section.)
- Pull the bucket toward the machine using the arm as the main digging force.
- When soil sticks to the bucket, remove it by moving the arm and/or bucket rapidly back and forth.
- Place the bucket teeth on the ground with the bottom of the bucket at a 45 degree angle to the ground.
- When trenching a straight line, position the tracks parallel to the trench. After digging to the desired depth, move the machine as required to continue the trench.
- When operating the arm, avoid bottoming the cylinder to prevent cylinder damage.

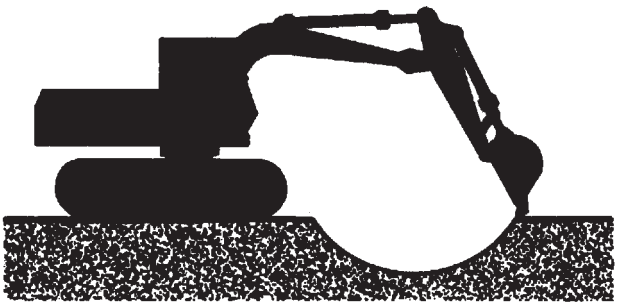

M107-05-037

IMPORTANT:

- **When digging at an angle, avoid striking the tracks with the bucket teeth.**
- **When lowering the boom, avoid sudden stops that may cause shock load damage to the machine.**
- **When digging a deep excavation, avoid striking the boom or bucket cylinder hoses against the ground.**
- **When operating the machine with the blade (if equipped) positioned towards the front, the bucket teeth may come in contact with the blade if you are not careful.**

Shovel

Backhoe operation digs the ground using the bucket in a roll-in motion. On the other hand, face shovel operation digs the ground using the arm cylinder in a scraping motion.

WARNING: Take care not to hit the cab when rolling in the arm with the reversed-installed bucket.

IMPORTANT: If a bucket hook is mounted, take care not to hit the arm with the hook when rolling in the bucket.

- For face shovel operation, dig the ground using the arm cylinder in a scraping motion.
- When underground water is expected, make a slope angle of 2 to 3° to drain this water as shown.

NOTE: Because of the hydraulic cylinder structure, digging force of the face shovel operation is smaller than the backhoe operation.



MZX5-05-003

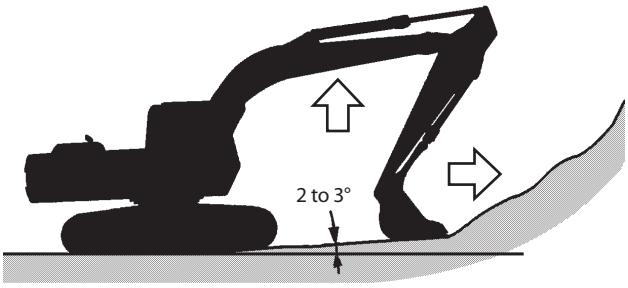

M104-05-020

Grading Operation

Operate the boom, arm, and the bucket in such a way so that the bucket teeth move horizontally, constantly keeping them perpendicular to the ground at the grading operation.

IMPORTANT: Do not pull or push dirt with the bucket when traveling. Excess force will be applied on each part, and the machine may be damaged.

1. When grading from the forward to the backward, slowly roll in the arm while slightly raising the boom. As soon as the arm passes the vertical position, slowly lower the boom so that the bucket can be horizontally moved.
2. When grading from the backward to the forward, operate the arm and bucket rolled back as described in step 1.
3. Do the slope finishing work in the same procedure as described in steps 1 and 2.

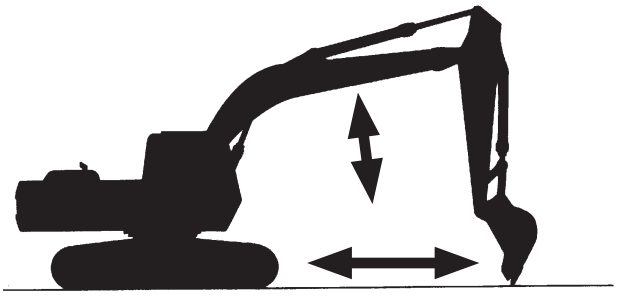

M104-05-017

Avoid Driving Bucket Teeth into Ground

WARNING: If the bucket teeth are forcedly driven into the ground, crushed material may spatter, possibly resulting in injury of the operator and/or co-workers around the machine. Furthermore, the service lifetimes of all front attachment parts may be shortened.

If the bucket teeth are forcedly driven into the ground, the service lifetime of all front attachment parts (especially the bucket) may be severely shortened. When excavating tightly fastened gravelly soil, use the bucket digging out force. Operate the boom, arm, and bucket simultaneously so that the bucket teeth can be effectively penetrated into the excavation surface. Carefully operate the machine to prevent crushed material from spattering, possibly resulting in injury to the operator and/or co-workers around the machine.

Avoid Hammer Work

WARNING: As the bucket body has the curved surface, hammer work or piling work is very dangerous. Doing so may damage the bucket and front attachment.

Do not attempt to use the bucket for hammer work and piling work.
Doing so may damage the bucket and front attachment, causing personal injury.



MZX5-05-004

Avoid Abusive Operation

Do not use travel while thrusting the bucket teeth into the ground and do not raise rear of the machine to use the machine's weight as additional digging force. Severe machine damage may result.

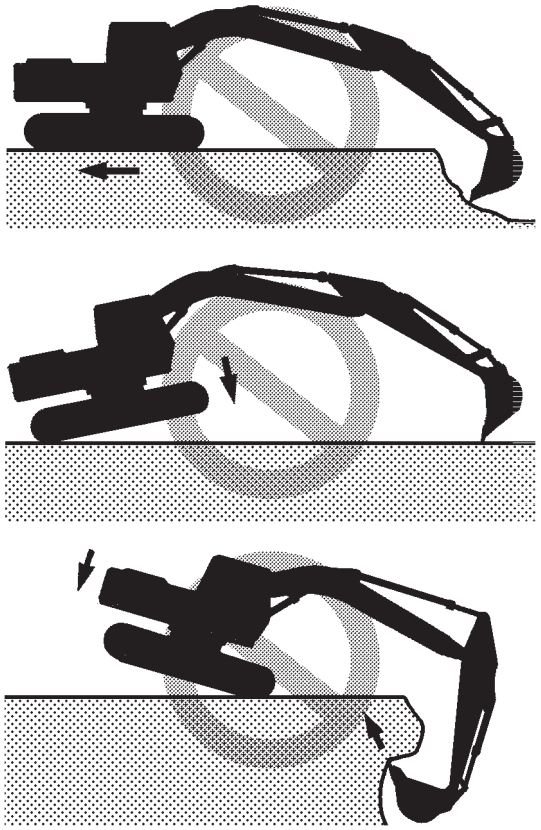

MZX5-05-005

Avoid Side Load the Bucket

Do not side load the bucket. For example, do not swing the bucket to level material or do not strike objects from the side with the bucket.
Doing so may damage the front attachment and the swing system.

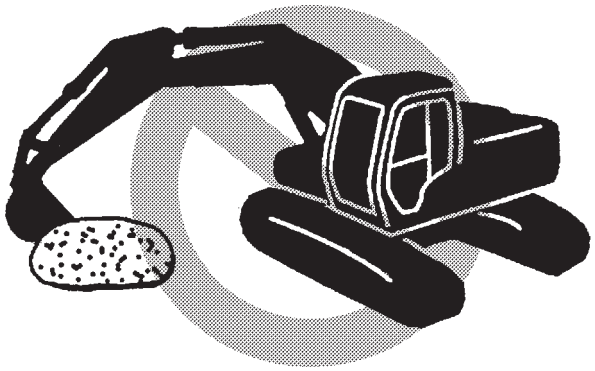

MZX5-05-006

Avoid Hitting Blade with Front-End Attachment

When operating the machine with the blade positioned towards the front, the bucket or boom cylinder may come into contact with the blade if you are not careful. Be sure to prevent this from happening.



MDED-05-003



MDED-05-004

Avoid Hitting Blade with Bucket

When crowding the arm into a traveling or transporting position, be careful not to let the bucket hit the blade.



MDED-05-004

Avoid Striking the Blade into a Rock

Do not attempt to strike large rocks with the blade, as doing so will damage the blade and the blade cylinders, shortening their operating lives.



MDED-05-005

Do Not Use Wide Track Shoes on Rough Ground.

Never use wide track shoes on rough ground such as rocks, sand or gravel. Wide track shoes are designed for soft ground.

Failure to do so may result in shoe bending and/or shoe bolt loosening, and may damage other undercarriage components such as track link and rollers.
(Refer to the "Shoe Types and Applications" in the Specifications section.)

Shackle Hole Usage

A shackle hole is provided on the track frame to tow light weight objects as specified below.

IMPORTANT: Be sure to conform to the restrictions and precautions stated below when towing a light weight object using the shackle hole provided on the track frame. The track frame and/or the shackle hole may be damaged otherwise.

- The maximum drawbar pull: 19610 N (2000 kgf, 4400 lbf)
- Be sure to use a shackle.
- Keep the tow line horizontal, straight, and parallel to the tracks.
- Select the slow travel mode. Slowly drive the machine when towing.

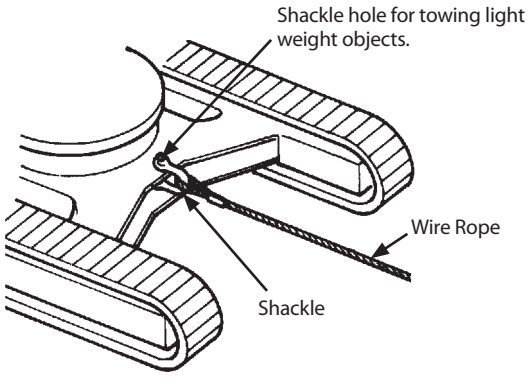

M104-05-011

Lifting

WARNING: When you use machine for lifting, be sure to comply with all local regulations. Cables, straps, or ropes can break, causing serious injury. Do not use damaged chains, frayed cables, slings, straps, or ropes to crane.

Never move the load suddenly. Never move load over a person's head. Do not allow any persons near load.

Keep all persons away from wire-rope-attached load, lifted or sitting on the ground unless it is securely sitting on blocks or on the ground.

Position upperstructure so that the travel motors are at the rear.

Do not attach sling/chain to the bucket teeth.

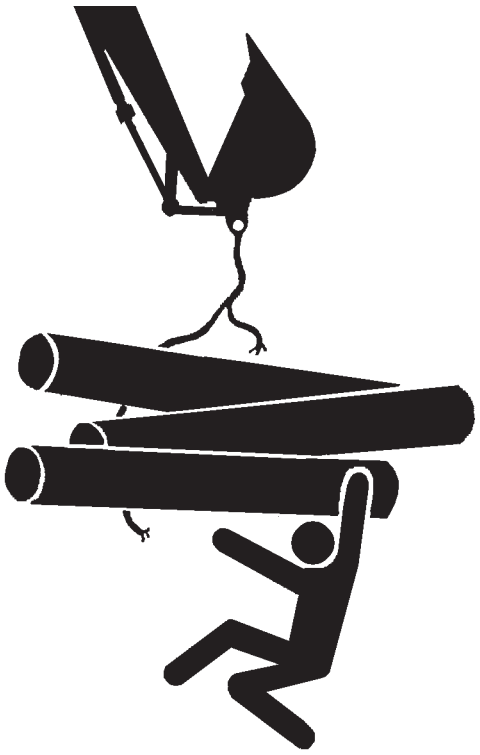

SA-014

- Secure sling/chain tightly to the load being lifted. Wear gloves when securing sling/chain.
- Fasten sling/chain to bucket loop bucket hook or bucket pin, with the bucket roll-in and arm roll-in.
- Coordinate hand signals with your signal man before starting.
- Be aware of the location of all persons in the working area.
- Attach a hand line to load and make sure person holding it is well away from load.
- Before lifting, test your load.

1. Park your machine close to load.
2. Attach load to the machine.
3. Raise load 50 mm (2 in) above the ground.
4. Swing the load all the way to one side.
5. While keeping load close to the ground, move it away from machine.
6. If there is any indication of reduced stability of your machine, lower load to the ground.

- Lift load only as high as necessary.

Pilot Accumulator Functions

The pilot accumulator (1) is a pressure storage reservoir of the control circuit which supplies pressure and enables to operate the control circuit even after stopping the engine.
Thus, the front attachment can be lowered with its own weight by using the control lever and pressure in the hydraulic circuit can be released after stopping the engine.

Pressure Release Procedure of Hydraulic Circuit

1. Set the machine in the parking position.
2. Pull the pilot control shut-off lever to the LOCK position.

Perform items from 3 to 5 within 15 seconds.
As pressure in the accumulator gradually decreases after stopping the engine, pressure in the hydraulic circuit can be released only immediately after stopping the engine.

3. Stop the engine. Turn the key switch ON.
4. Push the pilot control shut-off lever to the UNLOCK position.
5. Move the control levers and attachment pedals forward and rearward or left and right to release pressure from the hydraulic circuit.
6. Pull the pilot control shut-off lever to the LOCK position and turn the key switch OFF.

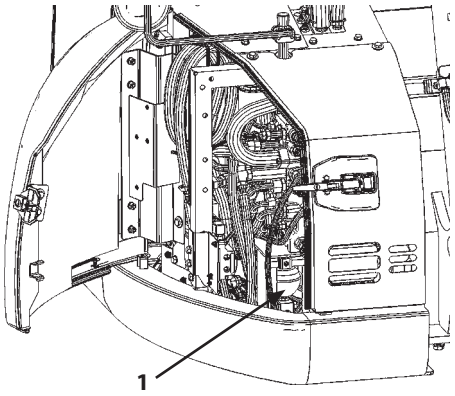

ZX75US-5A MDED-05-006

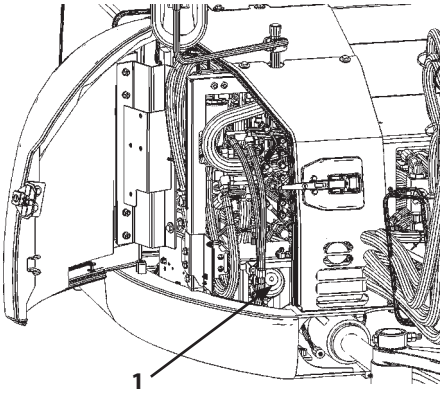

ZX85USB-5A MDED-05-007

Emergency Boom Lowering Procedure

WARNING: Prevent personal injury. Confirm that no one is under the front attachment before starting the procedure below.

If the engine stalls and cannot be restarted, lower the boom to lower the bucket to the ground referring to the emergency boom lowering procedure stated below.

1. Be sure to bleed air pressure from the hydraulic oil tank by pressing air bleed valve (1) on the hydraulic oil tank.

WARNING: Be sure to work only after oil temperature is low or before operation. Failure to do so may allow high temperature oil to spray, possibly causing severe burns.

2. Lower the boom in the procedures on the next page.

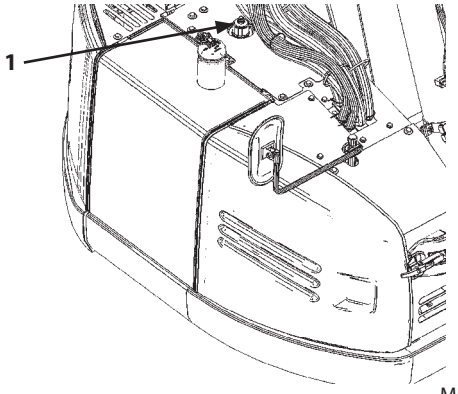

ZX75US-5A MDED-05-008

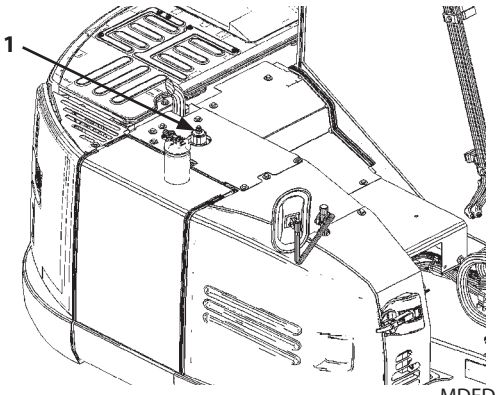

ZX85USB-5A MDED-05-009

Releasing Hose Rupture Valve (Machine Equipped with Hose Rupture Valve)

The hose rupture valve prevents sudden falling of the front attachment in the event of hose breaks during machine operation. It is located on the rod side of the arm cylinder and bottom side of the boom cylinder.

WARNING:

- **Never attempt to operate the hose rupture valve unless emergency. Failure to do so may result in serious accident.**
- **Loosen the hose rupture valve slowly. If adjustment screw (4) is loosened rapidly, the arm or boom may lower rapidly.**

To lower the front attachment in case of emergency such as a fault is generated while raising the front attachment, operate the valve by following the procedure given below.

1. Remove cap (1) from the valve.
2. Put the matching marks on plug (2), lock nut (3) and adjustment screw (4) for assembling.
3. Loosen lock nut (3). Securely tighten adjustment screw (4).

IMPORTANT: Note turn number of the adjustment screw. It is used for returning the adjustment screw to its original state.

4. Lower the front attachment by operating the emergency valve on the control valve.

   After checking that the front attachment is completely lowered, return the emergency valve to its original state.

   (Refer to "Releasing Emergency Valve" on the next page.)
5. Return adjustment screw (4), lock nut (3), plug (2) of the hose rupture valve to their original state.

   Tightening torque: 10 to 14 N (1 to 1.4 kgf·m)

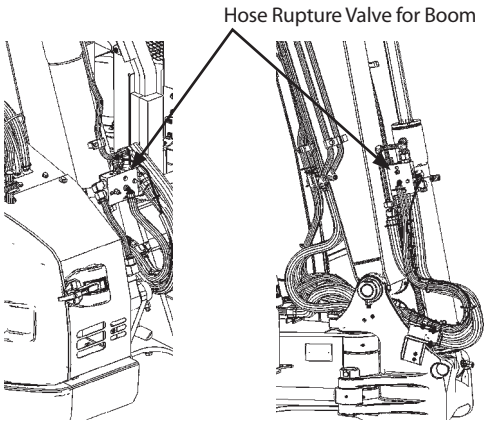

MDED-05-010 MDED-05-011

ZX75US-5A ZX85USB-5A

Boom Cylinder

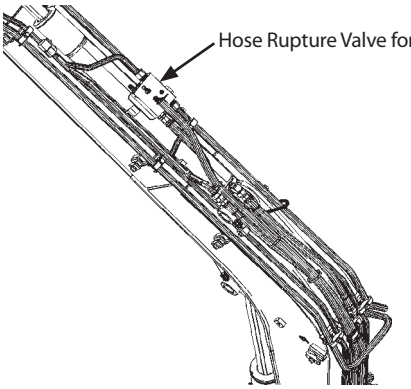

Arm Cylinder MDED-05-012

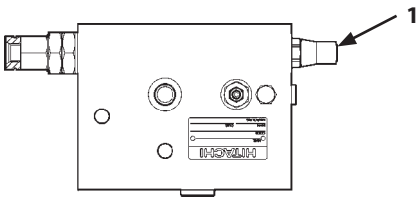

MDED-05-013

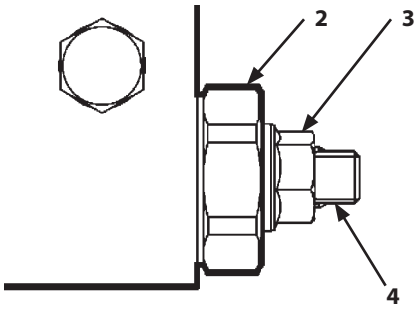

MADC-05-004

Releasing Emergency Valve

IMPORTANT: Never loosen screw (2) more than 2 turns. Screw (2) may come off.

1. Loosen lock nut (1). Loosen screw (2) one half of a turn. The boom lowering speed can be somewhat adjusted by loosening screw (2) more.

IMPORTANT: Excessive leakage may result if the screw and the lock nut are tightened insufficiently. Be sure to retighten the screw and the lock nut to specifications.

2. After the boom is lowered, tighten screw (2) and tighten lock nut (1) to the specifications below.

Locknut (1)
Tightening Torque: 13 N·m (1.3 kgf·m, 9.4 lbf·ft)
Screw (2)
Tightening Torque: 7 N·m (0.7 kgf·m, 5.0 lbf·ft)

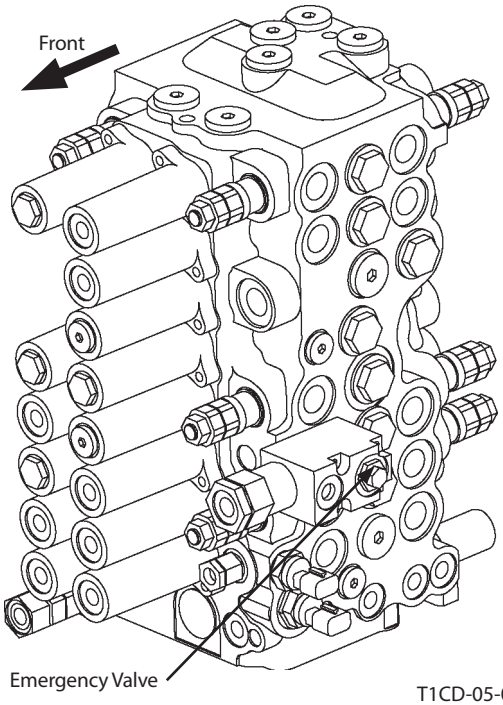

T1CD-05-04-002

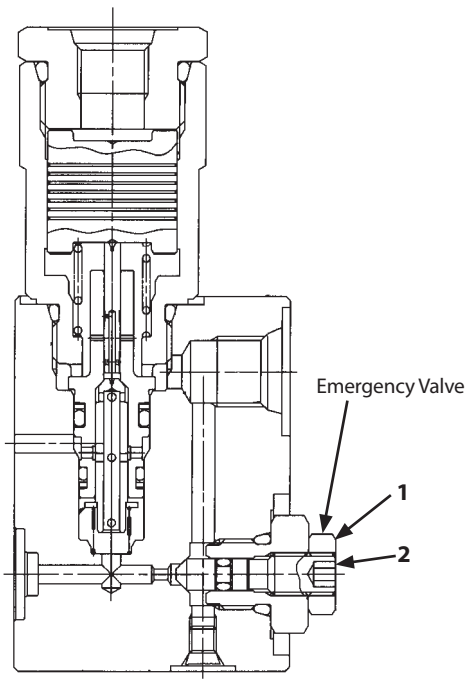

T1CD-05-04-001

Precautions for After Operations

- After finishing the day's operation, drive the machine to a firm, level ground where no possibility of falling stones, ground collapse, or floods are present.
  (Refer to the group for "PARKING MACHINE" in the DRIVING MACHINE section.)
- Fully refill the fuel in the fuel tank.
- Clean the machine.

MEMO

Transporting by Road



M1V1-06-001

When transporting the machine on public roads, be sure to first understand and follow all local regulations.

- When transporting the machine using a trailer, check the width, height, length and weight of the trailer with the machine loaded. Note that transporting weight and dimensions may vary depending on the type of shoe or front attachments installed.
- Investigate beforehand the conditions of the route to be traveled, such as dimensional limits, weight limits, and traffic regulations.

In some cases, getting the permission from the local authority concerned or disassembling the machine to bring it within dimensional limits or weight limits of local regulations may become necessary.
Notify the nearest dealer that you are transporting the unit.

Loading/Unloading on a Trailer

Always load and unload the machine on a firm, level surface.

WARNING: Be sure to use a loading dock or a ramp for loading/unloading. Never load or unload the machine onto or off a truck or trailer using the front attachment functions when driving up or down the ramp.

Ramp/Loading Dock:

1. Before loading, thoroughly clean the ramps, loading dock and flatbed. Dirty ramps, loading docks, and flatbeds with oil, mud, or ice on them are slippery and dangerous.
2. Place blocks against the truck and trailer wheels while using a ramp or loading dock.
3. Ramps must be sufficient in width, length, and strength. Be sure that the incline of the ramp is less than 15 degrees.
4. Loading docks must be sufficient in width and strength to support the machine and have an incline of less than 15 degrees.
5. When loading the machine equipped with pat crawler or rubber pad shoes, take sufficient care not to allow the machine to slip since the surface of the rubber pad shoe is flat.

   Load the machine only after removing soil or clay adhered to the machine.
6. When transporting the machine equipped with a blade, take care not to hit the blade.

Loading/Unloading

WARNING:

- **Always turn the auto-idle switch OFF when loading or unloading the machine. In the auto-idle mode, speed may automatically increase.**
- **Always select the slow speed mode with the travel mode switch.**
- **Never steer while driving up or down a ramp as it is extremely dangerous and may cause the machine to turnover. NEVER attempt to change directions whilst positioned on the ramp. If repositioning is necessary, first move back to the ground or flatbed, modify traveling direction, and begin to drive again.**
- **The top end of the ramp where it meets the flatbed is a sudden bump. Take care when traveling over it as the balance may be lost.**
- **If the front attachment is not fitted, reverse onto the trailer.**
- **Extreme care must be taken when swinging the upper structure when the machine is on the trailer flatbed. If the front attachment is fitted, swing slowly with the arm fully roll-in underneath the boom being careful not to loose the balance of the machine.**

Loading

If the front attachment is fitted, load with the front faced towards the front, if the front attachment is not fitted, reverse onto the trailer.

1. Load the machine so that the centerline of the machine aligns with the centerline of the trailer flatbed.
2. Drive the machine onto the ramp slowly.

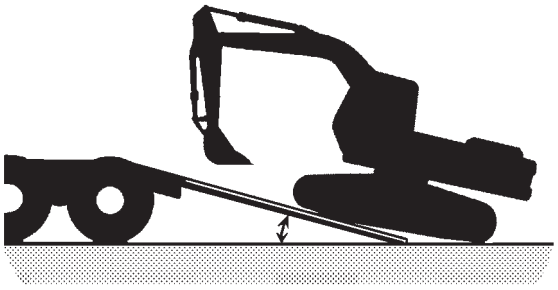

M1G6-06-002

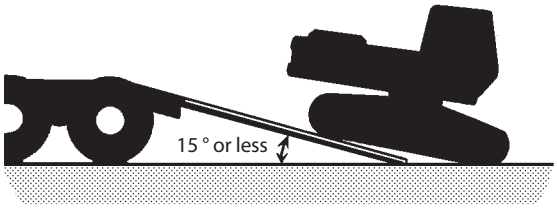

M107-06-018

3. When the front attachment is fitted

3.1 Determine a position for the bucket in line with the trailer. Adjust the angle of the boom and the arm at 90 to 110 °.

3.2 Lower the bucket onto to the deck of the trailer before the unit passes over the end of the ramp for support.

3.3 Move the machine as illustrated right. And then, slowly rotate the upperstructure 180 ° while keeping the arm fully rolled in.

3.4 Reverse the machine to the specified position.

3.5 Rest the front attachment on supports such as wooden blocks placed on the trailer flatbed. Also lower the blade onto the deck at this time (if fitted).

4. Stop the engine. Remove the key from the key switch.

5. Place the pilot control shut-off lever in the LOCK position.

6. Close cab windows, roof vent and door, and cover the exhaust opening, to prevent entry of wind and water. Place a cover over the exhaust outlet. Lock all doors, covers and caps if they have a lock.

7. House all mirrors and the radio antenna away correctly.

CAUTION: In cold weather, be sure to warm up the machine before loading or unloading it.

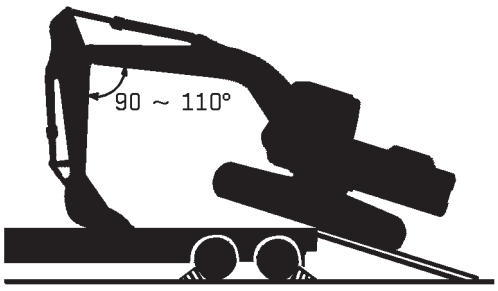

M107-06-012



MDED-06-001



M107-06-013

Fastening Machine for Transporting

WARNING: Fasten the machine frame to the deck securely with chains and cables. While traveling, loads may shake around, move forward or backward or to the sides.

1. Place cog stoppers or blocks in front of and behind the tracks to help secure the unit.
2. Fasten each corner of the machine and front attachment to the trailer with appropriate strength of chains or cables.



M1V1-06-001

Unloading

WARNING:

- **Always turn the auto-idle switch OFF when loading or unloading the machine. In the auto-idle mode, speed may automatically increase.**
- **Always select the slow speed mode with the travel mode switch.**
- **Never steer while driving up or down a ramp as it is extremely dangerous and may cause the machine to turnover. NEVER attempt to change directions whilst positioned on the ramp. If repositioning is necessary, first move back to the ground or flatbed, modify traveling direction, and begin to drive again.**
- **The top end of the ramp where it meets the flatbed is a sudden bump. Take care when traveling over it as the balance may be lost.**
- **If the front attachment is not fitted, reverse noto the trailer.**
- **Extreme care must be taken when swinging the upper structure when the machine is on the trailer flatbed. If the front attachment is fitted, swing slowly with the arm fully roll-in underneath the boom being careful not to loose the balance of the machine.**

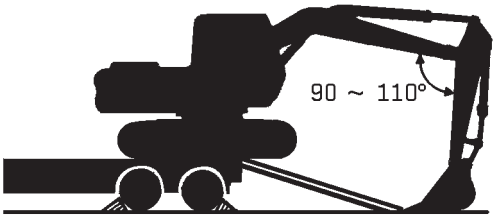

M107-06-014

IMPORTANT: Make sure that the angle of the boom and the arm is kept between 90 to 110 ° when unloading the unit.

Damage to the unit is possible if the arm is kept in a suspended state during unloading.

1. Travel extremely slowly with the bucket on the ground and the angle of the arm and the boom kept at between 90 to 110 ° when moving from the edge of the trailer onto the ramp.

IMPORTANT: When driving the machine over the ramp, do not allow the machine to hit the ground too hard with the arm. Possible damage to the hydraulic cylinders may result.

2. The bucket must be on the ground before the machine begins to tip forward.
3. As the machine moves forward, raise the boom and extend the arm until the machine is completely off the ramp.



M107-06-015

Lifting Machine

WARNING:

- **Use lifting cables and other lifting tools being free from any damage and/or aging, and having sufficient strength.**
- **Consult your nearest Hitachi dealer for correct lifting procedures, and the size and types of lifting cable and tools.**
- **Pull the pilot control shut-off lever to the LOCK position so that the machine does not accidentally move while being lifted.**
- **Incorrect lifting procedure and/or incorrect wire rope attachment will cause the machine to move (shift) while being lifted, resulting in machine damage and/or personal injury.**
- **Do not lift the machine quickly. Excessive load will be applied to the lifting wire ropes and/or lifting tools, possibly causing them to break.**
- **Do not allow anyone to come close to or under the lifted machine.**
- **The indicated gravity center is for the standard specification machine. The gravity center will vary depending on the kinds of attachments and/or optional equipment to be installed or their position to be taken. Therefore, take care not to lose the balance of the machine while lifting.**

Lifting

1. Fully extend the arm and bucket cylinders. Lower the boom until the bucket comes in contact with the ground.
2. Pull the pilot control shut-off lever to the LOCK position.
3. Stop the engine. Remove the key from the key switch.
4. Close and lock all doors and covers.
5. Use wire ropes and support bar of sufficient length so that they do not come in contact with the machine while lifting.

   Wrap some protectors around wire ropes and/or support bar as required to prevent the machine from being damaged.
6. Set a crane in an appropriate position.
7. Thread the wire rope through and under both sides of the track frames as illustrated. Attach the wire ropes to the crane.

Model	Wire Rope and Support Bar (mm)			
	L1	L2	L3	L4
ZX75US-5A	8420	5130	8500	3200
ZX85USB-5A	8380	5130	8570	3200

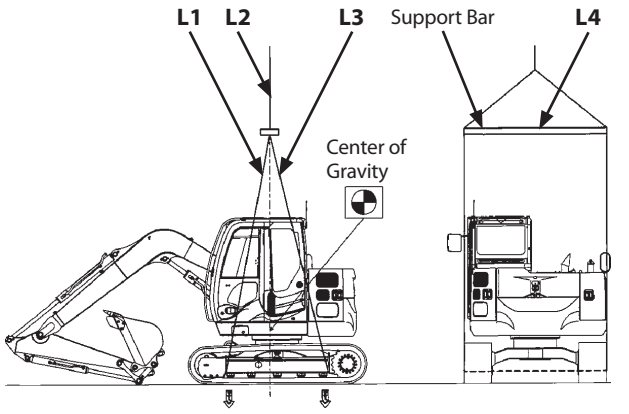

ZX75US-5A

MDEC-06-001

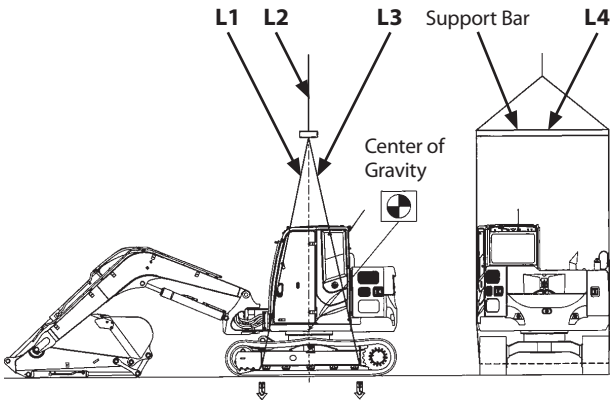

ZX85USB-5A

MDEC-06-002

Correct Maintenance and Inspection Procedures

Learn how to service your machine correctly. Follow the correct maintenance and inspection procedures shown in this manual.



SA-005

Inspect machine daily before starting.

- Check controls and instruments.
- Check coolant, fuel and oil levels.
- Check for leaks, kinked, frayed or damaged hoses and lines.
- Walk around machine checking general appearance, noise, heat, etc.
- Check for loose or missing parts.

If there is any problem with your machine, repair it before operating or contact your authorized dealer.

IMPORTANT:

- **Use only recommended fuel and lubricants.**
- **Be sure to use only genuine Hitachi parts. Failure to do so may result in serious injury or death and/or machine breakdown.**
- **Failure to use recommended fuel, lubricants, and genuine Hitachi parts will result in loss of Hitachi product warranty.**
- **Never adjust engine governor or hydraulic system relief valve.**
- **Protect electrical parts from water and steam.**
- **Never disassemble electrical components such as main controller, sensors, etc.**
- **Never adjust parts of engine fuel system or hydraulic equipment.**
- **Using bad quality fuel, drainage agent, fuel additives, gasoline, kerosene or alcohol refueled or mixed with specified fuel may deteriorate performance of fuel filters and cause sliding problem at lubricated contacts in the injector. It also affects the engine, leading to malfunction.**
- **Use Hitachi genuine high performance filter.**

- Body Information Controller
  This machine provides a body information controller that stores machine operation information for preventive maintenance.
  When maintaining the machine, our authorized service man may down load the stored information.
  Consult with your nearest Hitachi dealer for detailed function of this device.
- Communication Terminal Operation
  It is not necessary to check or operate the communication terminal however if any abnormality is found, consult your nearest Hitachi dealer.
  Before installing any covering attachment such as a head guard, consult your nearest Hitachi dealer.
  Never spray water on the communication terminal and the wirings.
- Inquire on the proper way to recycle or dispose of oil, fuel, coolant, filters, batteries and other waste from your local environmental or recycling center, or from your authorized dealer.

Check the Hour Meter Regularly

Refer to the List of Check and Maintenance for information about lubricants, check and adjustment intervals. The maintenance guide table is affixed in the back of the tool box cover. Refer to 7-5 page.

Check and maintenance intervals shown in this manual are those for the machines to be operated under normal conditions. In case the machine is operated under more severe conditions, shorten the intervals.

Layout

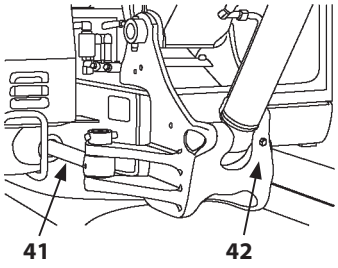

ZX85USB-5A

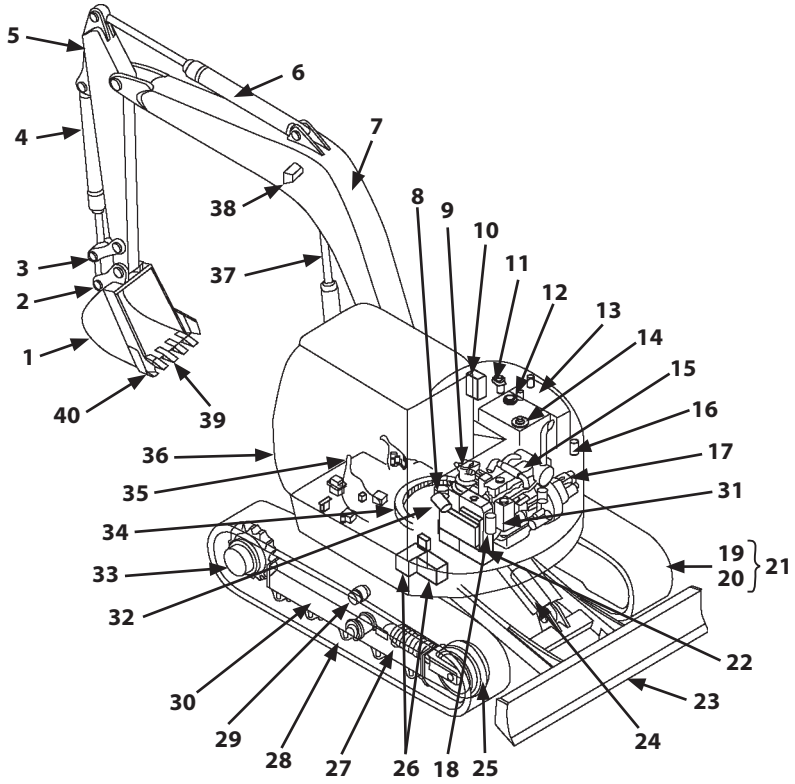

MDED-07-066

1- Bucket
2- Link A
3- Link B
4- Bucket Cylinder
5- Arm
6- Arm Cylinder
7- Boom
8- Center Joint
9- Swing Device
10- Control Valve
11- Pilot Filter
12- Swing Drain Filter
13- Fuel Tank
14- Hydraulic Oil Tank
15- Engine
16- Fuel Filter
17- Pump
18- Reserve Tank
19- Track Link
20- Shoe
21- Track
22- Radiator, Oil Cooler
23- Blade
24- Blade Cylinder
25- Front Idler
26- Battery
27- Track Adjuster
28- Lower Roller
29- Upper Roller
30- Track Frame
31- Washer Tank
32- Air Cleaner
33- Travel Device
34- Swing Bearing
35- Control Lever
36- Cab
37- Boom Cylinder
38- Work Light
39- Tooth
40- Side Cutter
41- Boom Swing Cylinder
42- Boom Swing Post

Maintenance Guide Table

The maintenance guide table is affixed to the right side of the cab (outside). Lubricate and/or service the parts at the intervals as instructed in the table so that all necessary maintenance can be performed regularly.

- Symbol Marks
  The following marks are used in the maintenance guide table.

	Grease (Front Joint Pin, Swing Bearing, Swing Gear)		Hydraulic oil filters (Pilot Filter, Swing Drain Filter Hydraulic Oil Tank Filter, Suction Filter)
	Gear Oil (Travel Reduction Device)		Air Cleaner Element
	Engine Oil		Coolant (Long-Life Coolant)
	Engine Oil Filter		Fuel Filter
	Hydraulic Oil		

- Maintenance Guide Table
  Sample: ZX85USB-5A

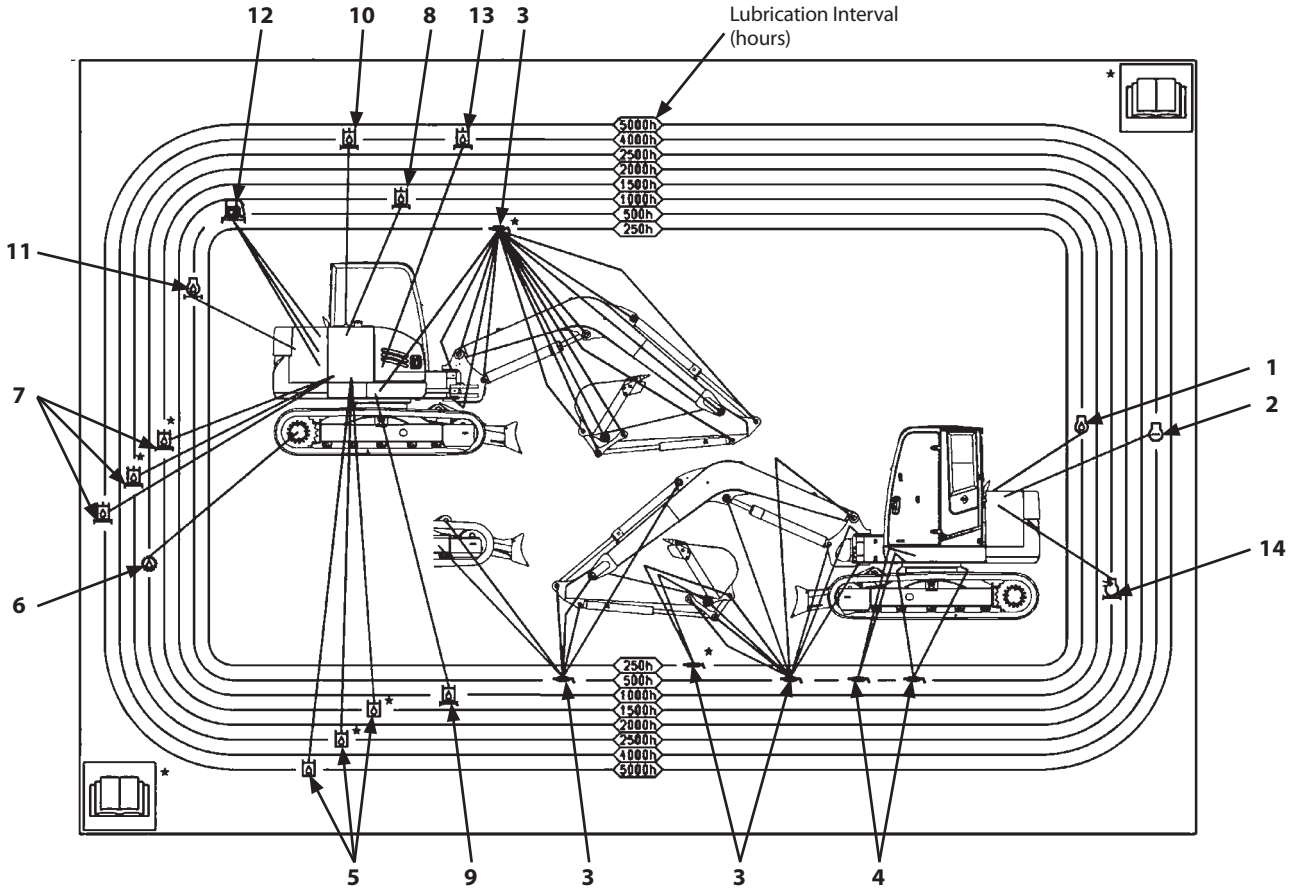

MDED-07-002

	Item	Page		Item	Page
1	Engine Oil	7-24	8	Hydraulic Oil Filter (Full Flow)	7-37
2	Coolant (Long-Life Coolant)	7-58	9	Hydraulic Oil Filter (Pilot)	7-38
3	Grease	7-17	10	Hydraulic Oil Filter (Air Breather)	7-40
4	Grease	7-18	11	Engine Oil Filter	7-24
5	Hydraulic Oil	7-34	12	Fuel Filter	7-50
6	Gear Oil (Travel Device)	7-27	13	Swing Drain Filter	7-39
7	Hydraulic Oil Filter (Suction)	7-34	14	Air Cleaner Element	7-53

Preparations for Inspection and Maintenance

Except in special cases, park the machine by following the procedure before servicing the machine.

1. Park the machine on a level surface.
2. Lower the bucket to the ground.
3. Turn the auto-idle switch OFF.
4. Turn the engine control dial to the slow idle position and run the engine for 5 minutes to cool the engine.
5. Turn the key switch OFF to stop the engine. Remove the key. Be sure to place pilot control shut-off lever (1) to the LOCK position.
6. After putting a tag (2) for "Under Serving" on the easy-to-see cab door or control lever, begin the work.



M104-07-021

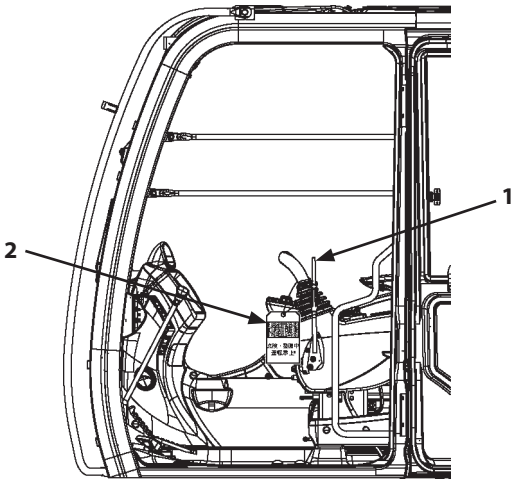

MDAA-07-028

WARNING: Never attempt to maintain the machine when the engine is running in order to prevent the accident. If maintenance work while engine running is unavoidable, strictly comply with the following items.

- **One person should take the operator's seat to be ready to stop the engine any time while communicating with other workers.**
- **When working around moving parts is unavoidable, pay special attention to ensure that hands, feet, and clothing do not become entangled.**
- **If parts or tools are dropped or inserted into the fan or the belt, they may fly off or be cut off. Do not drop or insert parts and tools into the moving parts.**
- **Move pilot control shut-off lever (1) to LOCK position so that the front attachment will not move.**
- **Never touch the control levers and pedals. If operating the control levers or pedals is unavoidable, signal co-workers to evacuate to safer place.**

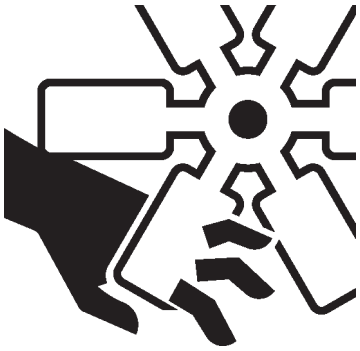

SA-2294

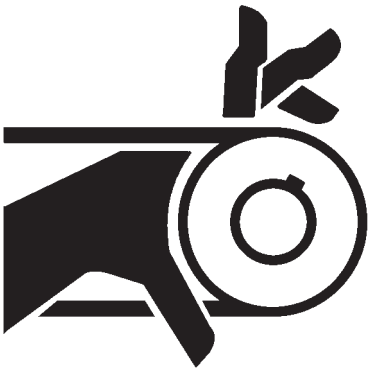

SA-026

Hood and Access Covers

⚠ WARNING:

- **Do not keep the hood and access covers open when the machine is parked on a slope, or while the wind is blowing hard. The hood or access covers may close accidentally, possibly resulting in personal injury.**
- **When opening or closing the hood and access covers, take extra care not to catch fingers between the base machine and the hood or access covers.**

- Holding the handle on the access cover, raise the cover until rod (1) is secured with catch (2).

- After opening the right front cover, right rear cover, and left cover, be sure to insert rod (3) into frame lock hole (4) to hold the cover.

- When opening the rear left cover, open the front left cover first. Then, pull to open the rear left cover as illustrated.

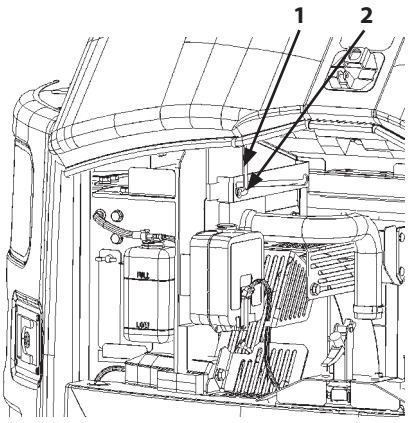

Engine Cover
MDED-07-003

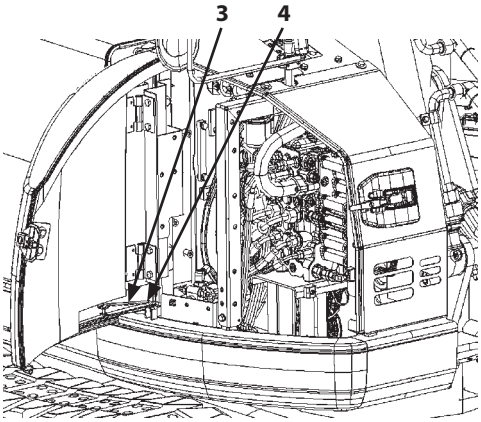

Front Right Cover
MDEC-07-007

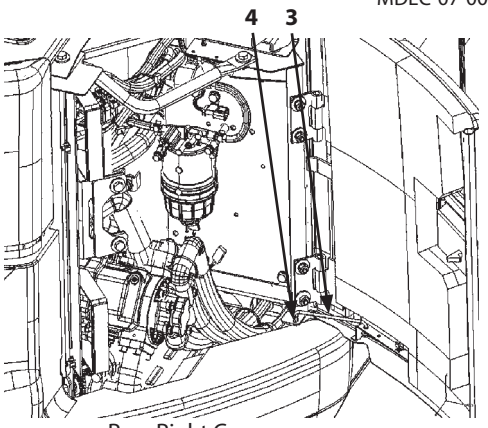

Rear Right Cover
MDEC-07-008

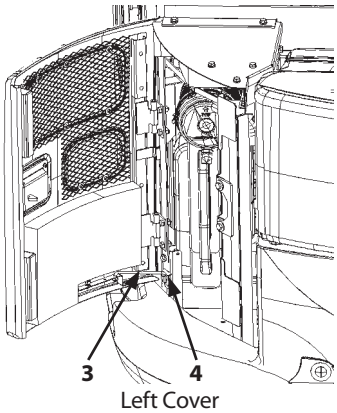

Left Cover
MDED-07-004

Maintenance Guide

A. Greasing

Parts				Quantity	Interval (hours)							Page
					8	50	100	250	500	1000	2000	
1.	Front Joint Pins	Bucket and Link Pins		8	★			★★				7-17
		Swing Post	ZX85USB-5A	4				★★				7-18
		Others		8	★			★★				7-18
2.	Swing Bearing			2								7-19
3.	Swing Internal Gear			1					★★★			7-20
4.	Blade Joint Pins			4								7-21

★ : In case excavations are performed in water, grease the pin after operation is complete.

★★ : 250 hours for only first time.

★★★ : Check and add grease if necessary.

IMPORTANT:

- **Grease bucket and link pivots every day until break-in operation (50 hours) is complete.**
- **When a bucket which does not have clearance adjustment mechanism such as slope-finishing bucket or V-type bucket, or a genuine Hitachi hoe bucket before EX-5 model, or an attachment other than genuine Hitachi bucket is used, grease two pins every 250 hours.**

B. Engine

Parts			Quantity	Interval (hours)							Page
				8	50	100	250	500	1000	2000	
1.	Engine Oil	Check Oil Level	1								7-22
2.	Engine Oil	Change	11.6 L (3.1 US gal)					★			7-24
3.	Engine Oil Filter	Replace	1								7-24

★ : The oil life is shortened more than normal under high temperature operating, shorten the maintenance interval.

C. Transmission

Parts			Quantity	Interval (hours)							Page
				8	50	100	250	500	1000	2000	
1.	Travel Device	Check Oil Level	2								7-26
		Change	1.2 L×2 (1.3 US gt×2)								7-27

D. Hydraulic System

	Parts		Quantity	Interval (hours)										Page
				8	50	100	250	500	1000	1500	2500	4000	5000	
1.	Check Hydraulic Oil Level		1	■										7-32
2.	Drain Hydraulic Oil Tank Sump		1				■							7-33
3.	Change Hydraulic Oil		100 L (26.4 US gal)							★	★		★	7-34
4.	Clean Suction Filter		1	When changing hydraulic oil										7-34
5.	Replace Full-Flow Filter		1						★					7-37
6.	Replace Pilot Oil Filter		1						■					7-38
7.	Replace Swing Drain Filter		1									■		7-39
8.	Replace Air Breather Element		1									■		7-40
9.	Check Hoses and Lines	for leaks	–	■										7-41
		for cracks, bend, etc.	–				■							7-41

NOTE: ★ Changing interval differs according to the brand of hydraulic oil used, kind of filter element or average attachment operating availability. Refer to the "changing intervals of hydraulic oil and full flow filter element" on page 7-29.

E. Fuel System

	Parts		Quantity	Interval (hours)							Page
				8	50	100	250	500	1000	2000	
1.	Drain Fuel Tank Sump		1	■							7-47
2.	Check Water Separator		1	■							7-48
3.	Replace Fuel Main Filter Element		1					■			7-50
4.	Replace Fuel Pre-Filter Element		1					■			7-51
5.	Check Fuel Hoses	for leaks, cracks	–	■							7-52
		for cracks, bend, etc.	–				■				7-52

F. Air Cleaner

	Parts		Quantity	Interval (hours)							Page
				8	50	100	250	500	1000	2000	
1.	Air Cleaner Outer Element	Clean	1	(or when indicator lit)			★				7-53
		Replace	1	After cleaning 6 times or 1 year							7-53
2.	Air Cleaner Inner Element	Replace	1	When outer element is replaced							7-53

★ : Shorten the interval in a dusty work site.

G. Cooling System

	Parts		Quantity	Interval (hours)							Page
				8	50	100	250	500	1000	2000	
1.	Check Coolant Level		1								7-56
2.	Check and Adjust Fan Belt Tension		1		★★						7-57
3.	Change Coolant		7.0 L (2.6 US gal)	Twice a year *							7-58
4.	Clean Radiator, Oil Cooler Core	Outside	1					★			7-59
		Inside	1	When changing coolant							7-59
5.	Clean Oil Cooler, Radiator Front Screen		1					★			7-59
6.	Clean Air Conditioner Condenser		1					★			7-59

★: Shorten the maintenance interval when the machine is operated in dusty areas.

★★: Maintenance required only during first time check.

*: When genuine Hitachi Long-Life Coolant is used, change every two years or 4000 operating hours, whichever comes first.

IMPORTANT:

- **Use soft water as a coolant. Do not use strong acid or alkaline water. Use the coolant with genuine Hitachi Long-Life Coolant (LLC) mixed by 30 to 50 %. If a coolant mixed with less than 30 % of Hitachi Long-Life Coolant is used, service life of the cooling parts may be shortened due to damage by freezing or corrosion of coolant system parts.**
- **If mineral-rich water is used for coolant, water stain or scale may build up inside the engine or radiator, causing overheat due to deterioration of coolant performance.**

H. Electrical System

	Parts		Quantity	Interval (hours)							Page
				8	50	100	250	500	1000	2000	
1.	Battery	Check Electrolyte Level	2	Every month							7-62
		Check electrolyte specific gravity	2	Every month							7-63
2.	Replacing Fuses	Replace	–	As required							7-65

I. Miscellaneous

	Parts			Quantity	Interval (hours)									Page
					8	50	100	250	500	1000	1500	2000	4500	
1.	Check and Replace Bucket Teeth			–	■									7-67
2.	Change Bucket			–	As required									7-69
3.	Convert Bucket Connection Into Face Shovel			–	As required									7-70
4.	Adjust Bucket Linkage			1	As required									7-71
5.	Remove Travel Levers			2	As required									7-72
6.	Check and Replace Seat Belt			1	■	Every 3 years								7-72
7.	Check Windshield Fluid Level			1	As required									7-73
8.	Check Track Sag			2		■								7-74
9.	Clean and Replace Air Conditioner Filter	Fresh Air Filter	Clean	1					■					7-77
			Replace	1	After cleaning 6 times or so									7-77
		Circulating Air Filter	Clean	1					■					7-78
			Replace	1	After cleaning 6 times or so									7-78
10.	Check Air Conditioner			–				■						7-80
11.	Clean Cab Floor			–	As required									7-82
12.	Check/Clean/Function Check Injection Nozzle			–							■			7-83
13.	Retighten Cylinder Head Bolt			–	*As required									7-83
14.	Inspect and Adjust Valve Clearance			–						*				7-83
15.	Check Fuel Injection Timing			–							■			7-83
16.	Measure Engine Compression Pressure			–	*As required									7-83
17.	Check Starter and Alternator			–						*				7-83
18.	Check Crankcase Breather			–							*			7-83
19.	Check Gas Damper			–	*As required									7-84
20.	Tightening and Retightening Torque of Nuts and Bolts			–		★★		■						7-84

★★: Maintenance required only during first time check.

*NOTE: * Contact your nearest Hitachi dealer for maintenance. Instruction plate for the recommended grease and lubricants is affixed inside the tool box cover.*

Periodic Replacement of Parts

To ensure safe operation, be sure to conduct periodic inspection of the machine. In addition, the parts listed below, if defective, may pose serious safety/fire hazards.
These parts may cause serious safety/fire hazards due to deterioration, wear, or fatigue being attributed to material aging or repeated operation. It is very difficult to gauge the extent of deterioration, fatigue, or weakening of the parts listed below simply by visual inspection alone. For this reason, replace these parts at the intervals shown in the table below.
Consult your authorized dealer for correct replacement.

Periodic Replacement Parts			Replacement Intervals
Engine		Fuel hose (Fuel tank, Supply pump, Filter to Engine)	Every 2 years
		Engine cushion rubber	Every 5 years or 4000 hours whichever comes first
		Pump coupling	Every 5 years or 4000 hours whichever comes first
		Fuel hose (Engine, Filter to Fuel tank)	Every 2 years
		Heater hose (Heater to engine)	Every 2 years
Hydraulic System	Base Machine	Pump suction hose	Every 2 years or 4000 hours whichever comes first
		Pump delivery hose	Every 2 years or 4000 hours whichever comes first
		Swing hose	Every 2 years or 4000 hours whichever comes first
		Travel high pressure hose	Every 2 years or 4000 hours whichever comes first
	Working Device	Boom cylinder line hose	Every 2 years or 4000 hours whichever comes first
		Arm cylinder line hose	Every 2 years or 4000 hours whichever comes first
		Bucket cylinder line hose	Every 2 years or 4000 hours whichever comes first
Seat Belt			Every 3 years
Clear hatch (if equipped)			Every 5 years

IMPORTANT:

- **Replace the clear hatch with a new one every 5 years even if undamaged. In case it was remarkably damaged or has received severe shock loads, replace it even if it has been not in use for 5 years.**
- **When cleaning the clear hatch, use a neutral detergent. If acidic or alkaline detergent is used, the clear hatch may become discolored or crack.**
- **Keep organic solvent away from the clear hatch. Failure to do so may cause the clear hatch to become discolored or crack.**

Kind of Oils

Recommended Grease

Kind of Grease		Lithium Grease
Application		Front Attachment Joint Pins, Swing Bearing, Swing Internal Gear
Air Temp.		-20 to 40 °C (-4 to 104 °F)
Recommended Products		Hitachi Genuine Grease NLGI EP-2
Alternative Products	Specification	NLGI 2 EP

IMPORTANT:

- **Hitachi Genuine Greases are specially designed and tested to provide optimum performance for the machine, hence we recommend to use Hitachi Genuine Greases.**
- **If you do not use Hitachi Genuine Greases, use grease conforming to EP-2.**
  Otherwise, the machine may suffer damage.
- **Do not use greases which do not meet the above specification or requirements. Use of unsuitable grease may lead to damage which is excluded from Hitachi Warranty Policy.**
- **For details, contact your nearest authorized dealer.**

Recommended Engine Oil

Kind of Oil		Engine Oil	
Application		Engine Crank Case	
Air Temp.		-20 to 30 ˚C (-4 to 86 ˚F)	-15 to 40 ˚C (5 to 104 ˚F)
Recommended Products		Hitachi Genuine Engine Oil 10W-30 DH-1	Hitachi Genuine Engine Oil 15W-40 DH-1
Alternative Products	Viscosity	10W-30	15W-40
	Specification	JASO DH-1	

IMPORTANT:

- **Hitachi Genuine Engine Oils are specially designed and tested to provide optimum performance for the machine, hence we recommend to use Hitachi Genuine Engine Oils.**
- **If you do not use Hitachi Genuine Engine Oil, use engine oil conforming to JASO DH-1. Otherwise, engine and muffler filter may suffer damage, or performance of engine may deteriorate.**
- **Do not use oils which do not meet the above specification or requirements. Use of unsuitable oil may lead to engine damage which is excluded from Hitachi Warranty Policy.**
- **For details, contact your nearest authorized dealer.**

Recommended Transmission oil

Application		Travel Reduction Gear
Kind of Oil		Gear Oil
Air Temp.		-20 to 40 °C (-4 to 104 °F)
Recommended Products		Hitachi Gear Oil GL-4 90
Alternative Products	Specification	API GL-4

IMPORTANT:

- **Hitachi Genuine Gear Oil are specially designed and tested to provide optimum performance for the machine, hence we recommend to use Hitachi Genuine Gear Oil.**
- **If you do not use Hitachi Genuine Gear Oil , use gear oil or engine oil conforming to specifications described above. Otherwise, the machine may suffer damage.**
- **Do not use oils which do not meet the above specification or requirements. Use of unsuitable oil may lead to engine damage which is excluded from Hitachi Warranty Policy.**
- **For details, contact your nearest authorized dealer.**

Recommended Hydraulic Oil

Kind of Lubricant	Hydraulic Oil	
Where to be applied	Hydraulic System	
Change Interval	5000 hours	1500 hours
Environmental Temp.	–20 to 40 °C (–4 to 104 °F)	
Recommended Products	Super EX 46HN	
Alternative Product		Product Conforming to JCMAS HK VG46W

NOTE: A different interval of oil change may be required for Alternative Products. For details, contact your nearest authorized dealer.

IMPORTANT:

- **Hitachi Genuine Hydraulic Oils are specially designed and tested to provide optimum performance for the machine, hence we recommend to use Hitachi Genuine Hydraulic Oils.**
- **If you do not use Hitachi Genuine Hydraulic Oil, use hydraulic oil conforming to JCMAS HK VG46W. Otherwise, the machine may suffer damage.For the information of JCMAS HK VG46W, refer to JALOS website.**
- **Do not use oils which do not meet the above specification or requirements. Use of unsuitable grease may lead to damage which is excluded from Hitachi Warranty Policy.**

Recommended Oil Viscosity

Application	Kind of Oil	Air Temperature (°C) -30 -20 -10 0 10 20 30 40	
Engine Crank Case	Engine Oil		Super Wide DH-1 10W30
			Super Wide DH-1 15W40
Travel Reduction Device	Gear Oil		API GL 4
Hydraulic System	Hydraulic Oil		Super EX 46HN
Fuel Tank	Diesel Fuel		ASTM Grade No.2-DS15
			ASTM Grade No.2-DS500
			ASTM Grade No.1-DS15
			ASTM Grade No.1-DS500
Grease Nipple	Lithium Grease		SEP Grease
Radiator	Coolant		Hitachi Long Life Coolant

A. Greasing

1 **Front Joint Pins**
--- every 500 hours

Lubricate all fittings shown in the figure.

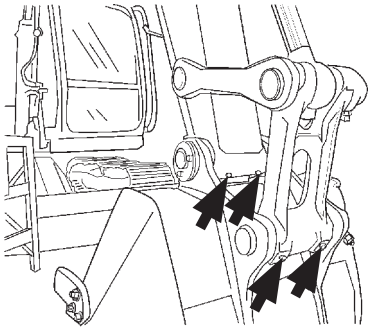

MDED-07-032

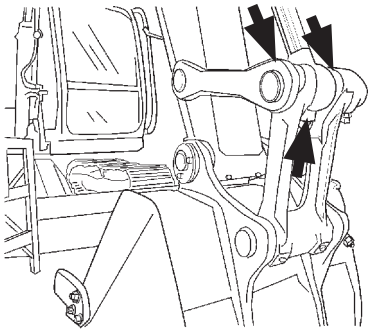

MDED-07-032

- Boom Foot

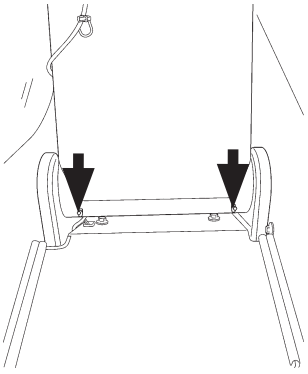

MDED-07-033

- Boom Cylinder Bottom Side

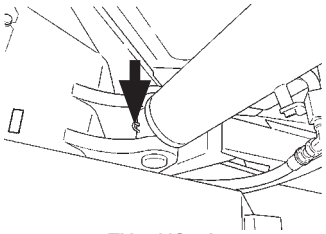

ZX75US-5A

MDED-07-034

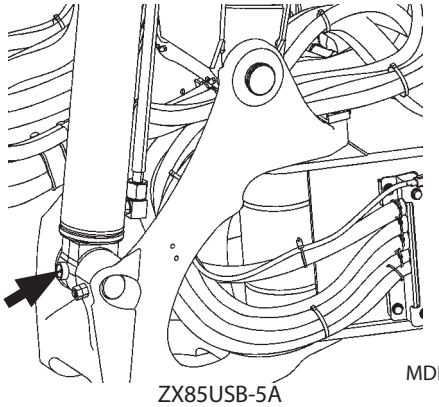

ZX85USB-5A

MDED-07-060

- Boom and Arm Joint Pin, Arm Cylinder Rod Pin and Bucket Cylinder Bottom Pin.

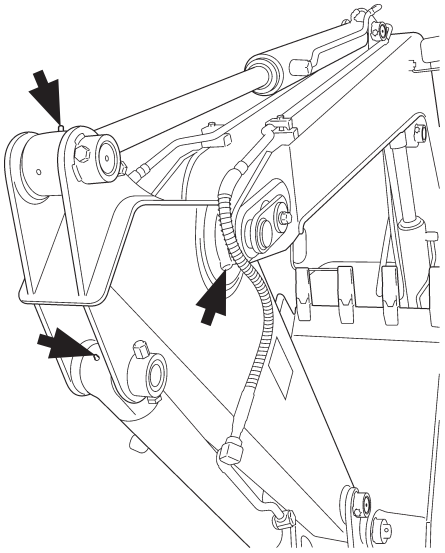

M1CG-07-007

- Boom Cylinder Rod Pins and Arm Cylinder Bottom Pin.

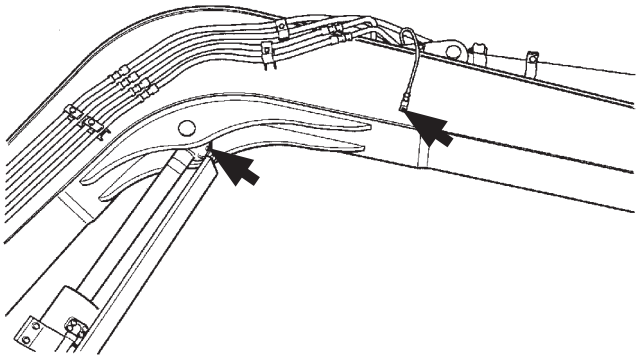

M195-07-012

- Swing Post (ZX85USB-5A)

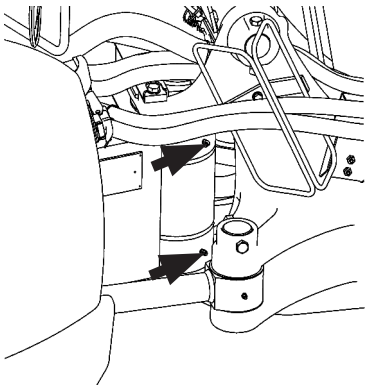

MDED-07-061

- Swing Cylinder (ZX85USB-5A)

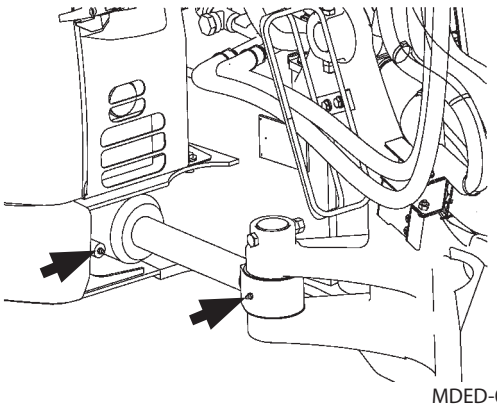

MDED-07-062

2 **Swing Bearing**

--- every 500 hours

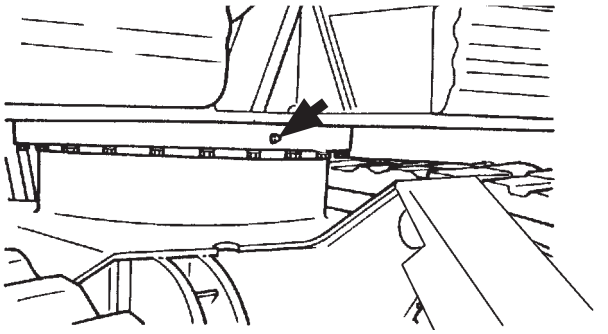

M197-07-012

CAUTION: Lubricating both the swing bearing and gear and rotating the upperstructure must be done by one person. Before you lubricate the swing bearing, clear the area of all persons.

Lower the bucket to the ground. Stop the engine. Pull the pilot control shut-off lever to the LOCK position. Use handrails.

1. Park the machine following the same procedures as described on page 7-7 for preparation for inspection and maintenance.
2. With the upperstructure stationary, apply grease via the two grease fittings.
3. Start the engine. Raise the bucket several inches off the ground and rotate the upperstructure 45° (1/8 turn).
4. Lower the bucket to the ground.
5. Repeat the procedure (Step 1 to 4) three times.
6. Apply grease to the swing bearing until grease can be seen escaping from the swing bearing seals.

   Grease Capacity : 0.20 L (0.21 US qt)
7. Take care not to supply excessive grease.

3 Swing Internal Gear --- every 500 hours

CAUTION: Lubricating both the swing bearing and gear and rotating the upperstructure must be done by one person. Before you lubricate the swing bearing, clear the area of all persons.

Lower the bucket to the ground. Stop the engine. Pull the pilot control shut-off lever to the LOCK position. Use handrails.

1. Park the machine following the same procedures as described on page 7-7 for preparation for inspection and maintenance.
2. Open the tool box cover on the upperstructure and remove cover (1).
3. Grease must be to the top of all internal gear teeth of the swing bearing and be free of contamination.

   Add approximately 0.5 kg (1.1 lb) of grease, if required. If the grease is contaminated, remove grease and replace with clean grease.

IMPORTANT: If water or mud is found in the swing gear area, see Operating in Water or Mud in the "Driving the Machine" section.

4. Install the cover.
5. If grease shows any sign of water or mud, replace all the grease on the internal gear.

   Remove cover (2) from the bottom of the swing gear housing, located near the center joint.

   Grease capacity : 4.4 L (1.2 US gal)

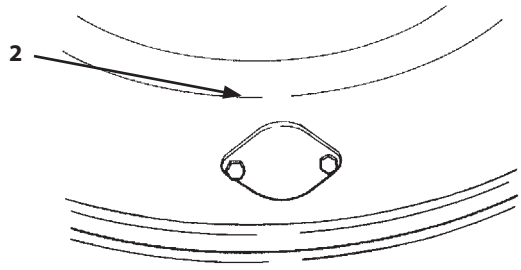

M157-07-161

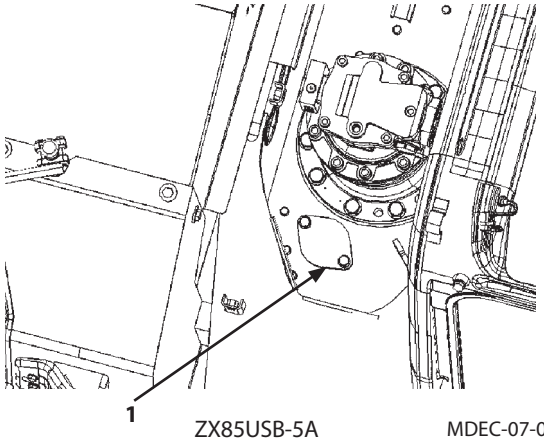

ZX85USB-5A MDEC-07-009

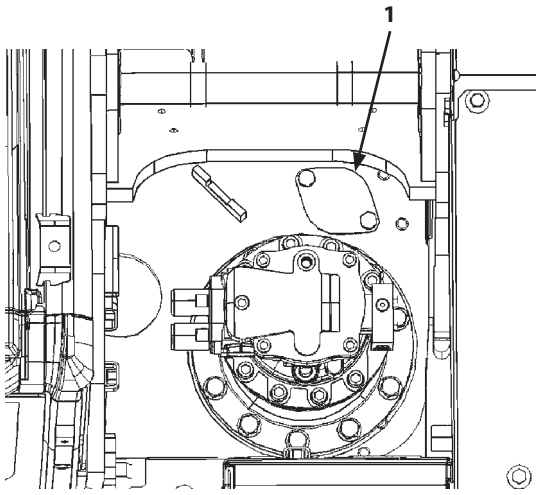

ZX75US-5A MDEC-07-010

(Year of Manufacturing; To Mar. 2015)

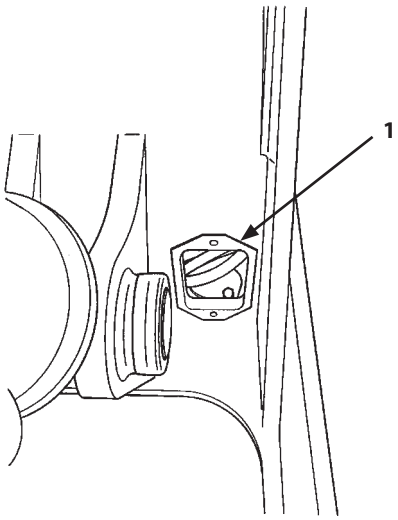

ZX75US-5A MDED-07-035

(Year of Manufacturing; From Apr. 2015)

4 **Blade Joint Pins**

--- every 500 hours

- Blade joint pins
- Blade cylinder rod/bottom pins

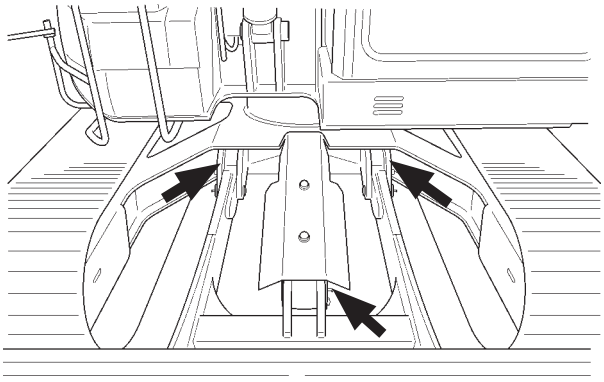

M1CC-00-001

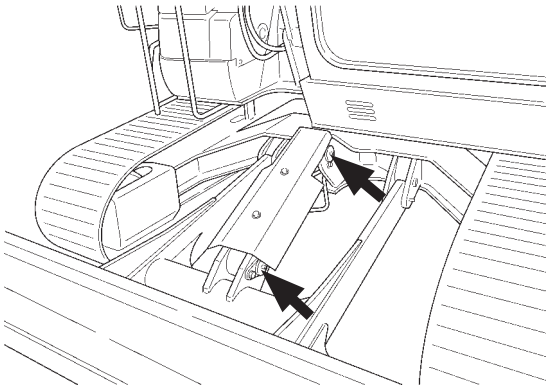

M1CC-07-021

B. Engine

1 **Engine Oil Level**

--- check daily

IMPORTANT: For most accurate readings, check the oil level every day before starting the machine. Be sure the machine is on a level surface.

1. Confirm that pilot control shut-off lever (1) is in the LOCK position.
2. Confirm that all control levers are placed in neutral.
3. Insert key switch (2). Turn it to ON position. Press and hold switch (3) with the engine stopped.

   The engine oil indicator (4) must be displayed in green.

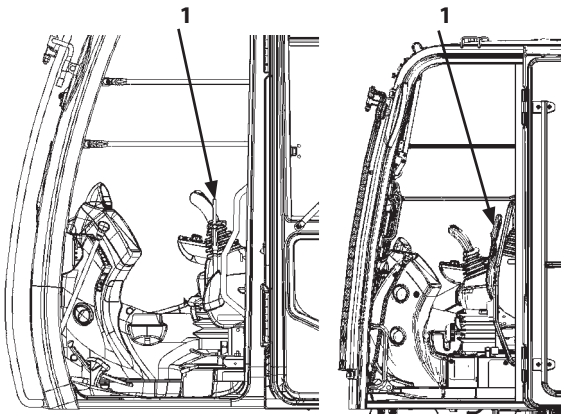

LOCK Position ZX75US-5A

LOCK Position ZX85USB-5A

MDED-03-001

IMPORTANT: Do not rely only on the monitor display for checking the machine conditions; visually check them yourself as required such as oil level.

Always check the machine on a firm, level surface.

NOTE: If the security function is enabled, a password is required.

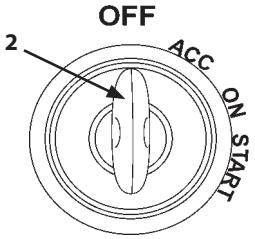

MDCD-01-030

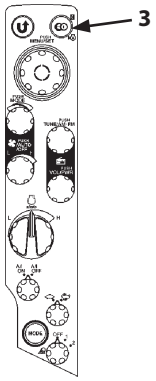

MDCD-01-026

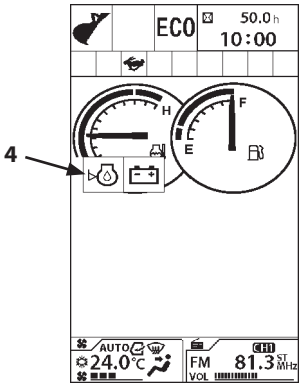

MDAA-01-043

--- Visual Inspection

IMPORTANT: An incorrect engine oil level may cause trouble on the engine (The oil level should be between the upper and lower marks on oil level gauge (1)).

Even if the engine oil level exceeds the upper limit, control the oil level to the proper quantity before starting the engine.

Check oil level before starting the engine.
Open the engine cover and pull out oil level gauge (1). Wipe oil level gauge (1) with cloth, re-insert it into the pipe to the end, and then pull it out again.
The oil level should be between the upper and lower marks on dipstick (1).
If oil level is below the lower limit mark, add the recommended engine oil via oil filler (2).
If oil level exceeds the upper limit mark, remove drain plug (3) at the bottom of the engine oil pan, and then drain oil.

CAUTION: Do not spill oil while changing oil. Spilled fuel and oil, and trash, grease, debris, accumulated coal dust, and other flammables may cause fires.

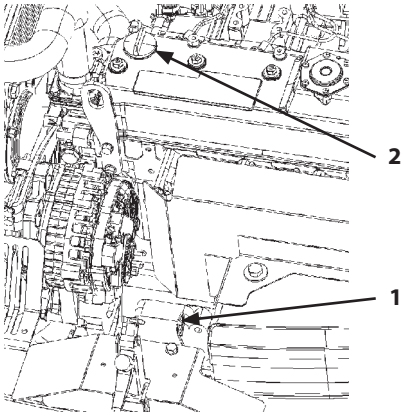

MDED-07-036

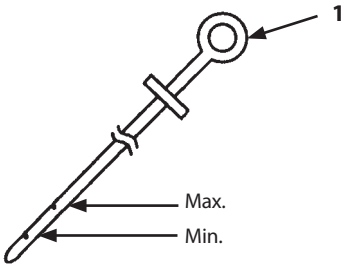

M178-07-011

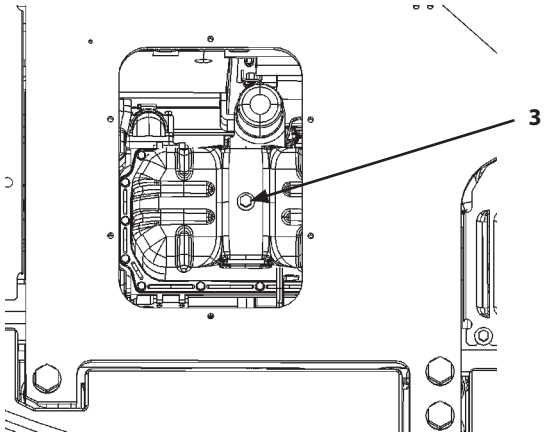

MDED-07-006

2 **Change Engine Oil**
--- every 500 hours

3 **Replace Engine Oil Filter**
--- every 500 hours

1. Run the engine to warm oil.

   DO NOT run the engine until oil is hot.
2. Park the machine on a level surface.
3. Lower the bucket to the ground.
4. Turn the auto-idle switch off.
5. Run the engine at slow idle speed without load for five minutes.
6. Turn the key switch OFF. Remove the key from the key switch.
7. Pull the pilot control shut-off lever to the LOCK position.

CAUTION:

- **Engine oil may be hot. Take extra care to avoid burns.**
- **Take care not to spill any oil when re-filling engine oil. Wiper to remove spilled oil if any. Failure to do so may cause oil to ignite, possibly resulting in a fire.**

8. Prepare a container to receive the drain oil.

   Oil Pan Drain Oil Capacity: Approx. 20 L
9. Remove oil filler cap (2)
10. Remove bolts (3) and cover (4).
11. Remove drain plug (6). Allow oil to drain through a clean cloth into a 20 liter container.
12. After all oil has drained, inspect cloth for any debris such as small pieces of metal.
13. Install and tighten drain plug (6).

    Tightening torque: 60 N·m (6 kgf·m)

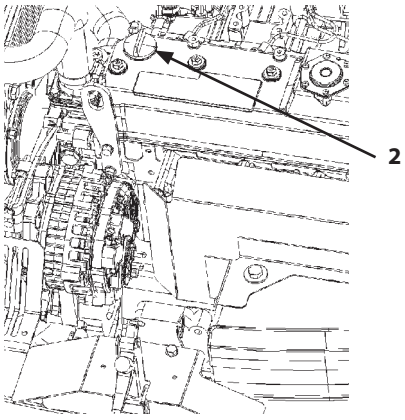

MDED-07-036

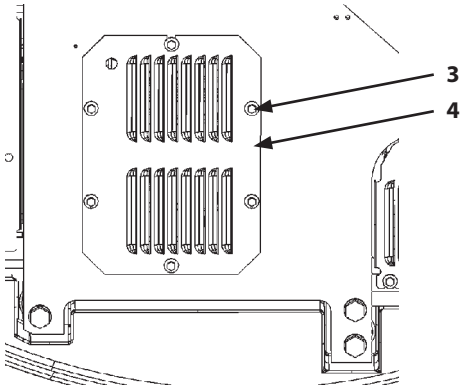

MDED-07-037

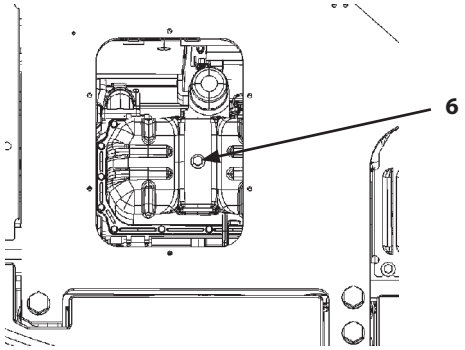

MDED-07-038

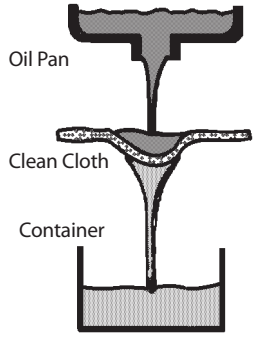

M104-07-010

14. Remove the filter cartridges of engine oil filter (5) by turning it counterclockwise with the filter wrench.
15. Clean the filter gasket contact area on the engine.
16. Apply a thin film of clean oil to the gasket of the new filter.
17. Install new filter. Turn the filter cartridge clockwise by hand until the gasket touches the contact area. Be sure not to damage the gasket when installing the filter.
18. Tighten engine oil filter (5) 3/4 to 1 turn more using the filter wrench. Be careful not to overtighten.

    Tightening torque: 20 to 24 N·m (2.0 to 2.4 kgf·m)
19. Remove oil filler cap (2). Fill the engine with recommended oil. Check that oil level is between the circle marks on the dipstick after 15 minutes.

    Engine oil capacity: 11.6 L
20. Install the oil filler cap (2).
21. Start the engine. Run the engine at slow idle for 5 minutes.
22. Stop the engine. Remove the key from the key switch.
23. Check for any leakage at the drain plug.
24. After 15 minutes, check oil level on the dipstick (1) and add or drain oil to maintain proper oil level. (The oil level should be between the upper and lower limit marks on the dipstick (1).)

IMPORTANT: Do not reuse cartridge element (5).

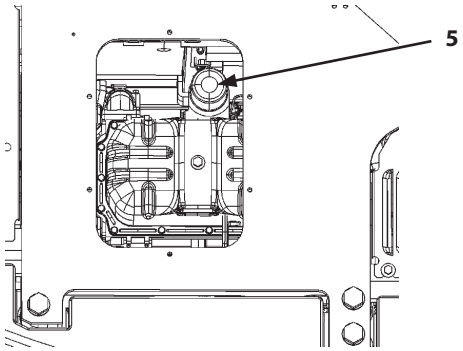

MDED-07-006

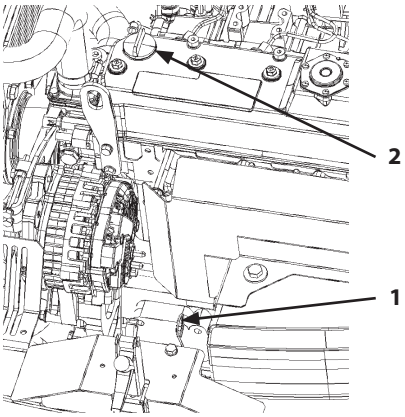

MDED-07-005

C. Transmission

1 Travel Reduction Gear

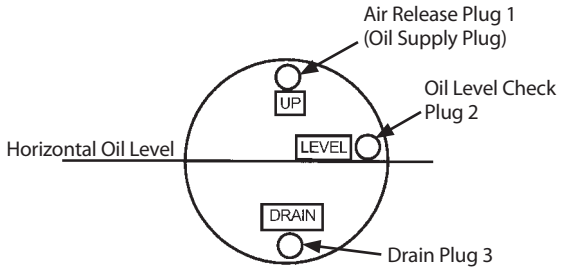

MDAA-07-047

Check Oil Level --- every 250 hours

1. Park the machine on a level surface.
2. Rotate the travel motor until the imaginary line through plug (1) and plug (3) is vertical.
3. Park the machine following the same procedures as described on page 7-7 for preparation for inspection and maintenance.

WARNING: Keep body and face away from the air release plug. Gear oil may be hot just after operation. Wait for gear oil to cool and then gradually loosen the air release plug to release pressure.

4. After gear oil has cooled, slowly loosen air release plug (1) to release pressure.
5. Remove air release plug (1) and oil level check plug (2). Oil must be up to the bottom of hole.
6. If necessary, add oil until oil flows out of oil level check plug (2) hole. (See gear oil chart)
7. Clean and wrap the plug threads with sealing-type tape. Install plug (1) and (2).

   Tighten plugs (1) and (2) to 50 N·m (5 kgf·m).
8. Check the gear oil level in the other travel reduction gear.

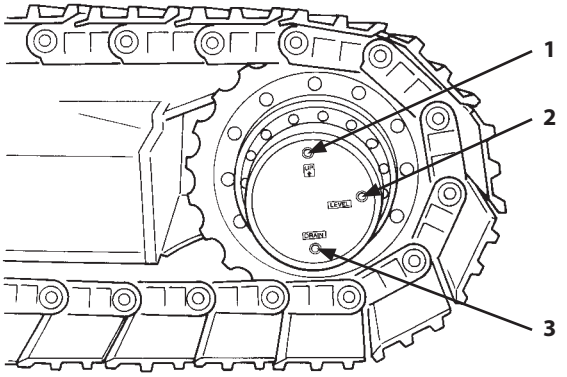

M1CC-07-019

Change Gear Oil --- every 2000 hours

IMPORTANT: Do not use gear oils other than those listed in the "Brand Names of Recommended Transmission Oil".

1. Park the machine on a level surface.
2. Rotate the travel motor until the imaginary line through plug (1) and plug (3) is vertical.
3. Park the machine following the same procedures as described on page 7-7 for preparation for inspection and maintenance.

WARNING: Keep body and face away from the air release plug. Gear oil may be hot just after operation. Wait for gear oil to cool and then gradually loosen the air release plug to release pressure.

4. After gear oil has cooled, slowly loosen air release plug (1) to release pressure, and temporarily retighten plug (1).
5. Remove drain plug (3) and plug (1), in that order, to drain oil.
6. Clean drain plug (3). Wrap the threads of drain plug (3) with sealing-type tape. Install plug (3). Tighten plug (3).

   Tightening Torque: 50 N·m (5 kgf·m)
7. Remove oil level check plug (2).
8. Add oil until oil flows out of oil level check plug (2) hole. (See gear oil chart)
9. Clean plugs (1) and (2). Wrap the threads of oil level check plug (2) and air release plug (1) with sealing-type tape. Reinstall the plugs (1) and (2). Tighten the plugs (1) and (2).

   Tightening Torque: 50 N·m (5 kgf·m)
10. Repeat steps 4. to 9. for the other travel reduction gear.

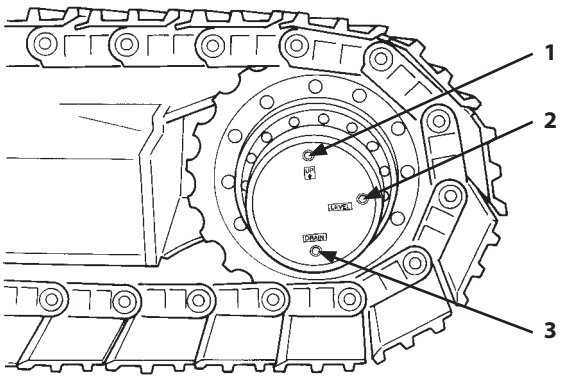

M1CC-07-019

D. Hydraulic System

Inspection and Maintenance of Hydraulic Equipment

IMPORTANT: Never adjust parts of hydraulic equipment.

CAUTION: When checking and/or servicing the hydraulic components, pay special attention to the following points.

1. Park the machine following the same procedures as described on page 7-7 for preparation for inspection and maintenance.
2. Begin servicing hydraulic components only after components, hydraulic oil and lubricants are completely cooled, and after releasing residual pressure.

2.1 Before checking and/or servicing the hydraulic system, be sure to release the residual pressure from the cylinder circuits of the boom, arm and the bucket, swing piping and pilot piping. An accumulator can be installed on some models of this machine as an option to be capable of moving the front attachment for specified time (around 10 seconds) after stopping the engine.

2.2 Bleed air from the hydraulic oil tank to release internal pressure.

2.3 Immediately after operation, all hydraulic components and hydraulic oil or lubricants are hot and highly pressurized. Begin inspection and/or maintenance work only after the machine has cooled down.

Servicing heated and pressurized hydraulic components may cause plugs, screws and/or oil to fly off or escape suddenly, possibly resulting in personal injury. Hydraulic components may be pressurized even when cooled.

Keep body parts and face away from the front of plugs or screws when removing them.

2.4 Even after air pressure in the hydraulic oil tank is released, when the machine is parking on a slope, the oil pressure in the travel motor and the swing motor circuits are maintained at high pressure as the reaction force of the machine weight is constantly applied to the travel motor. Never check and/or service the machine parking on a slope.

IMPORTANT:

- **When connecting hydraulic hoses and pipes, take special care to keep seal surfaces free from dirt and to avoid damaging them.**
- **Wash hoses, pipes, and the tank interior with a washing liquid and thoroughly wipe it out before reconnecting them.**
- **Only use O-rings that are free of damage or defects. Be careful not to damage them during reassembly. Do not allow high pressure hoses to twist when connecting them. The life of twisted hoses will be shortened considerably.**
- **Do not use hydraulic oils other than those listed in the table "Recommended hydraulic oil".**
- **When adding hydraulic oil, always use the same brand of oil; do not mix brands of oil. When using another manufacturer's hydraulic oil, be sure to change the full amount.**
- **Never run the engine without oil in the hydraulic oil tank.**

Change Hydraulic Oil and Replace Full-Flow Filter Element

Hydraulic breaker operation subjects the hydraulic system to become contaminated faster and to quickly deteriorate the hydraulic oil.
Failure to adhere to proper maintenance intervals may result in damage to the base machine and the breaker.
In order to extend the service life particularly of the hydraulic pump, change the hydraulic oil and the full-flow filter element at the specified frequency given below.
Check machine service hours by using the breaker hour meter. (Refer to the Breaker Operation in the OPERATOR'S STATION section.)

Changing intervals (Hours)

Attachment	Availability	*Hydraulic Oil	Full-Flow Filter Element	**Element Type
Bucket	100%	1500	1000	Standard Filter Paper High Performance Element
		2500		
		5000		
Hydraulic Breaker	100%	600	100	Standard Filter Paper
		1000	300	High Performance Element

* : Replacement intervals differ depending on the brand of hydraulic oil used. Refer to the Hydraulic System in the MAINTENANCE section.

** : Use the high performance element (micro-glass) on excavators engaged in demolition work.

Replacement Intervals (Hours) of Hydraulic Oil and Full Flow Filter Element

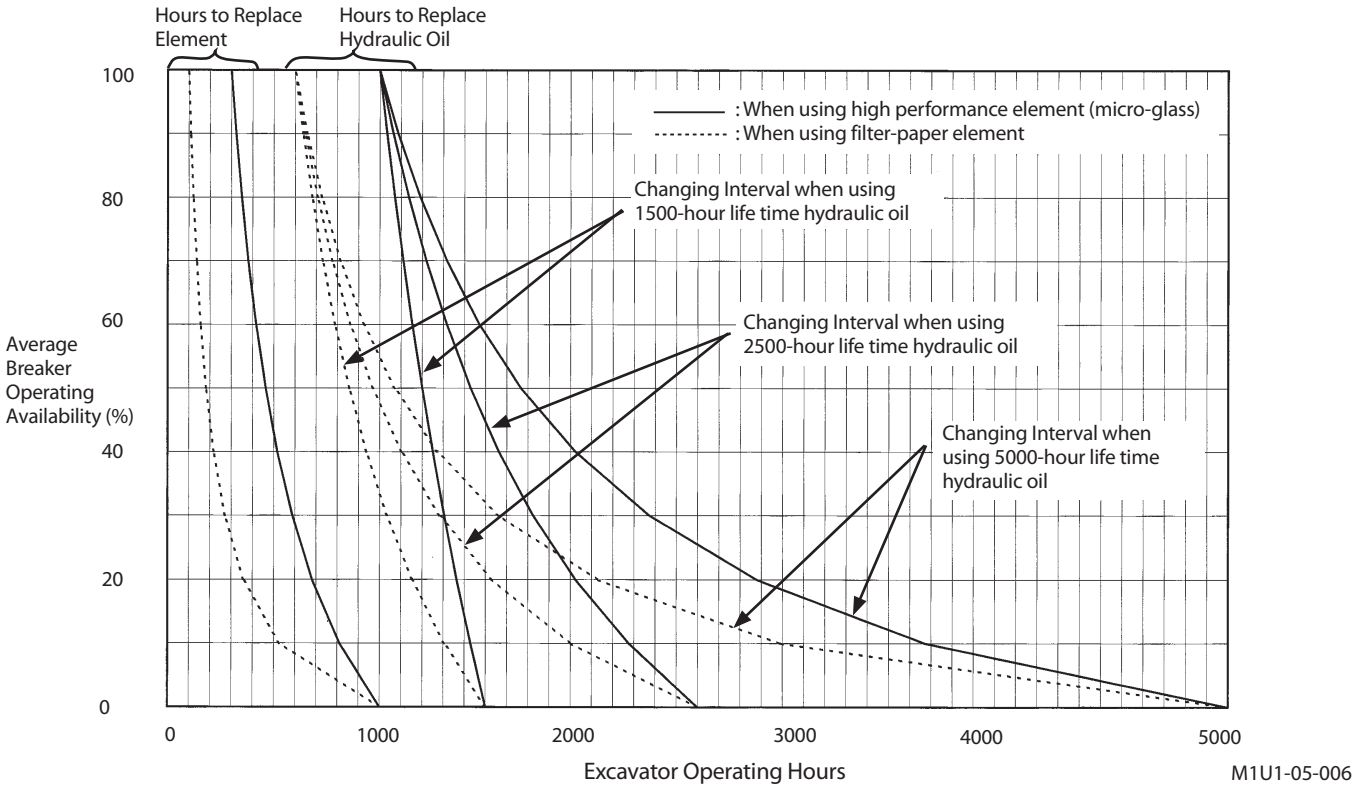

IMPORTANT: Use a high performance element (micro-glass) on excavators engaged in demolition work. In case using a filter-paper element is unavoidable, change hydraulic oil and the filter element at the intervals as illustrated with dotted lines.

NOTE: Hydraulic oil tank filter restriction indicator is optional. If a filter-paper element is used, this indicator does not operate. (Refer to the Hydraulic System in the Maintenance section.)

1 Check Hydraulic Oil Level --- daily



M104-07-021

IMPORTANT: If the oil level is not viewed in the level gauge, immediately refill hydraulic oil up to the appropriate level. Failure to do so may result in a serious failure in the hydraulic system. If the oil level is higher than the level gauge, remove oil down to the appropriate level using a pump.

1. Park the machine following the same procedures as described on page 7-7 for preparation for inspection and maintenance.
2. Open the access door in front of the main pump. Check oil level with level gauge (1) on hydraulic oil tank. Oil must be between marks on gauge (1). If necessary, add oil.

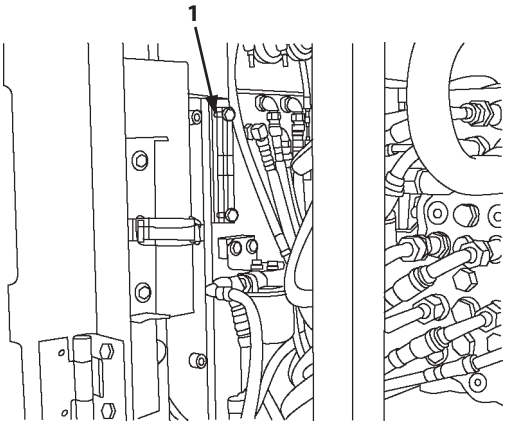

M1P1-07-009

CAUTION: The hydraulic oil tank is pressurized. Push the pressure release button on the air breather to release pressure, and carefully remove the cap.

To add oil:

3. Push the pressure release button on the air breather to release pressure. Remove the cover.
4. Add oil. Recheck oil level with level gauge (1).
5. Install the cover. Make sure the filter and rod assembly are in correct position.

2 **Drain Hydraulic Tank Sump**

--- every 250 hours

CAUTION: Hydraulic oil may be hot just after operation. Wait for oil to cool before starting work.

1. Park the machine on a level surface with the upperstructure rotated 90° for easier access.
2. Park the machine following the same procedures as described on page 7-7 for preparation for inspection and maintenance.

CAUTION: The hydraulic oil tank is pressurized. Push pressure release button (1) on the air breather to release pressure.

3. Push pressure release button (1) on the air breather to release pressure.
4. Loosen drain plug (2) to drain water and sediment, Do not remove the plug completely, only loosen it enough to drain water and sediment.
5. After draining water and sediment, retighten plug (2).

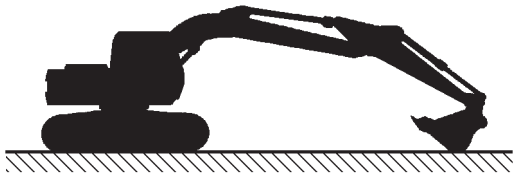

M1CC-07-002

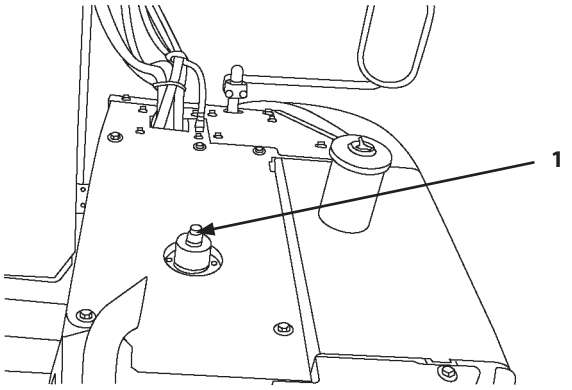

M1P1-07-010

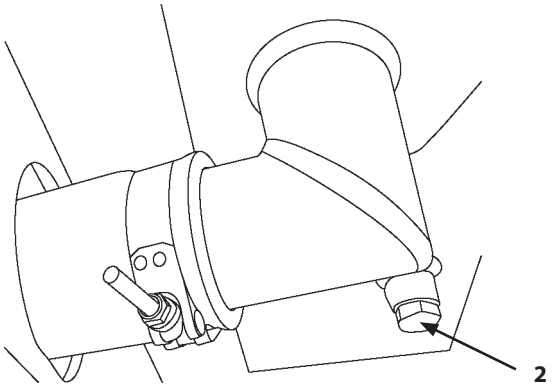

M1P1-07-017

3 **Change Hydraulic Oil**
--- every 5000 hours, 2500 hours or 1500 hours

4 **Suction Filter Cleaning**
when hydraulic oil is changed

CAUTION: Hydraulic oil may be hot just after operation. Wait for oil to cool before starting work.



M1CC-07-006

IMPORTANT:

- **Hydraulic oil changing intervals differ according to kind of hydraulic oils used. (See Recommended Oil Chart in this group)**
- **Do not use hydraulic oils other than listed in the "Brand Names of Recommended Hydraulic Oil".**

1. Park the machine on a level surface with the upperstructure rotated 90° for easier access.
2. Park the machine following the same procedures as described on page 7-7 for preparation for inspection and maintenance.
3. Clean the top of the hydraulic oil tank to keep dirt out of the hydraulic system.

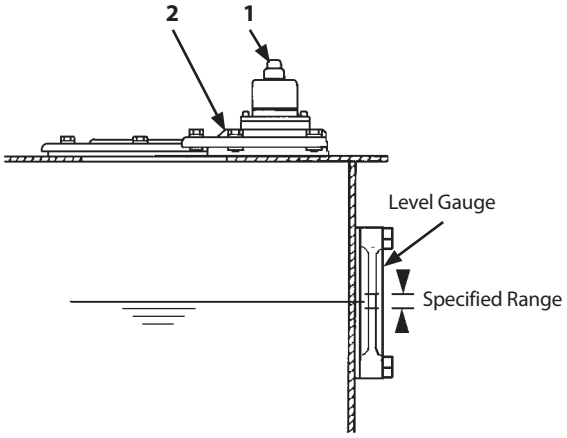

M1CD-07-012

CAUTION: The hydraulic oil tank is pressurized. Push pressure release button (1) on the air breather before removing the air breather.

4. Push pressure release button (1) on the air breather.
5. Remove cover (2).
6. Remove oil using a suction pump. The hydraulic oil tank capacity, up to specified oil level, is approximately A.
   A : 100 L (26.4 US gal)

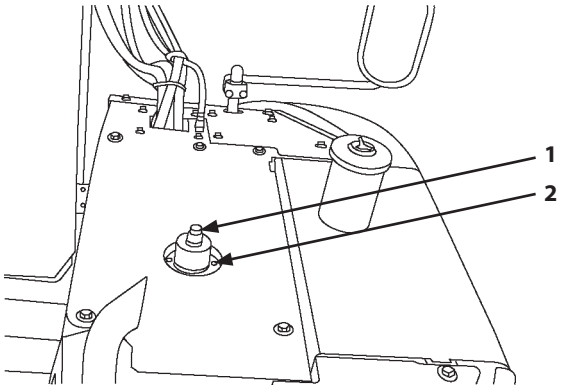

M1P1-07-010

7. Remove drain plug (3). Allow oil to drain.
8. Remove rod assembly (4).

IMPORTANT: When changing hydraulic oil, take care not to enter foreign matters such as dirt, water, and/or sand into the hydraulic oil tank.

9. Clean the filter and tank interior. If the filter is to be replaced, install new filter on the rod as shown. Tighten nut to 15 to 20 N·m (1.5 to 2.0 kgf·m, 11.0 to 14.5 lbf·ft).
10. Before installing the suction filter, check the dimension of rod assembly (4) shown in figure right. Securely insert rod assembly (4) into pipe (6).
11. Replace the hydraulic tank oil filter.

    (See "Replacement of Full-Flow Filter")
12. Clean, install and tighten drain plug (3).
13. Add oil until it is between the marks on the oil level gauge.
14. Before securing cover (2) with bolts, ensure the top edge of the rod assembly (4) is completely inserted into the hole of support (5). Install cover (2). Make sure filter and rod assembly (4) are in correct positions. Tighten the bolts to 50 N·m (5 kgf·m, 36 lbf·ft).
15. Be sure to bleed air form the system following the procedures shown next page.

NOTE: Replace element (4) at the regular interval to keep hydraulic oil clean and to extend the service life of the hydraulic components.

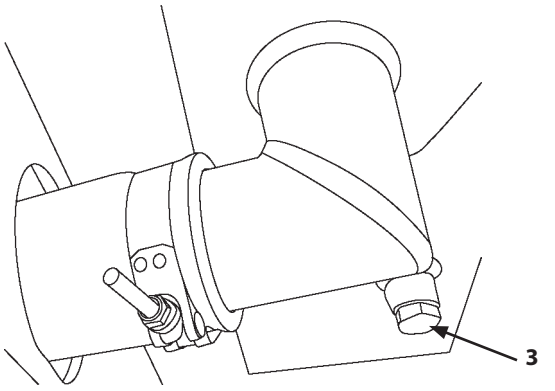

M1P1-07-017

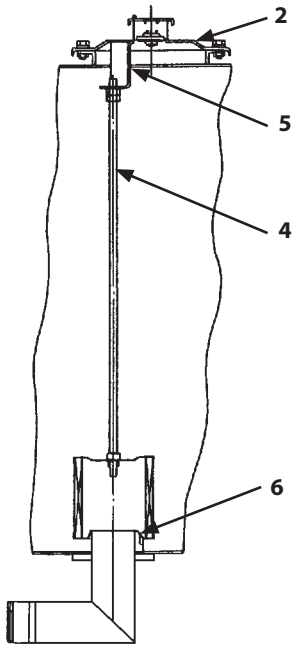

M197-07-083

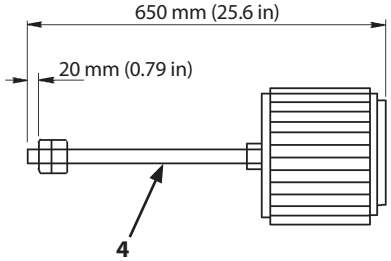

M107-07-070

Air Bleeding Procedures

Bleed air from these pumps after changing hydraulic oil.

IMPORTANT: If the hydraulic pump is not filled with oil, it will be damaged when the engine is started.

- Pump Air Bleeding
  1. Remove air bleed plug (1) on each pump.
  2. Fill the pump with oil through air bleed plug (1) port on each pump until oil flows out of air bleed plug (1) hole.
  3. Temporarily tighten air bleed plug (1) on each pump, start the engine and run at slow idle. Loosen one of air bleed plug (1) slightly until oil flows from plug port to release trapped air completely. Tighten air bleed plug (1). Repeat this step for the rest of plug (1).
  4. Purge air from the hydraulic system by running the engine at slow idle and operating the control levers slowly and smoothly for 15 minutes.
  5. Position the machine as illustrated in the oil level checking procedure.
  6. Turn the auto-idle switch off.
  7. Stop the engine. Remove the key from the key switch.
  8. Pull the pilot control shut-off lever to the LOCK position.
  9. Check the hydraulic oil tank gauge. Add oil if necessary.

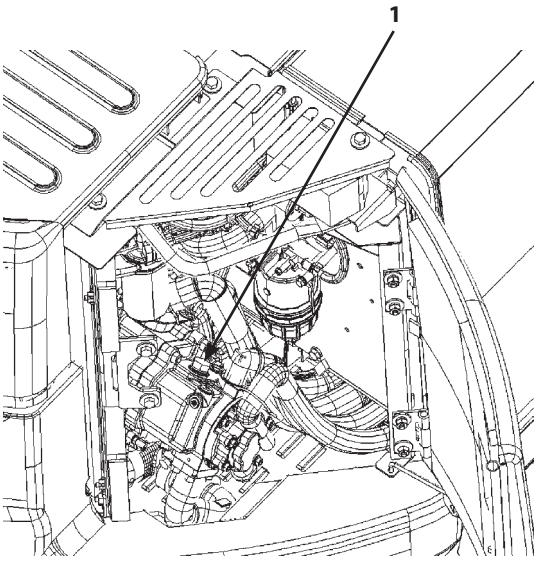

MDEC-07-011

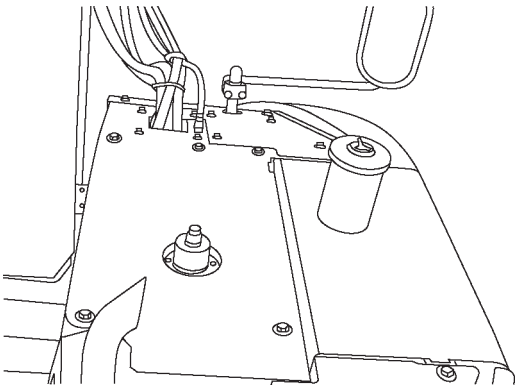

M1P1-07-010

5 Replacement of Full-Flow Filter --- every 1000 hours

IMPORTANT: Changing interval differs according to the brand of hydraulic oil used, kind of filter element or average attachment operating availability. Refer to "Change Hydraulic Oil and Replace Full-Flow Filter Element". (Refer to pages 7-30, 7-31)

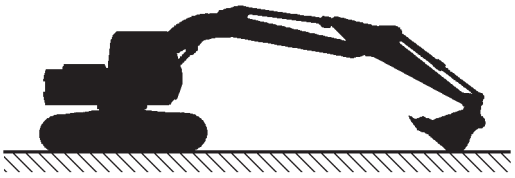

M1CC-07-002

CAUTION: Hydraulic oil becomes hot and pressurized during operation. Severe burns may result if skin comes in contact with escaping hydraulic oil immediately after operation. Wait for the oil to cool before starting any maintenance work.

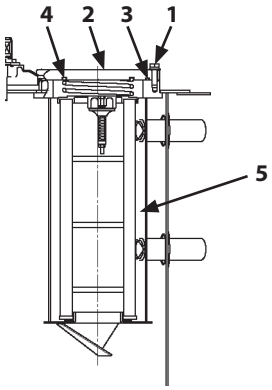

MDAA-07-004

Procedures:

1. Park the machine following the same procedures as described on page 7-7 for preparation for inspection and maintenance.
2. Before replacing element (5), be sure to bleed air pressure from the hydraulic oil tank by pressing the air bleed valve on the hydraulic oil tank.
3. Loosen bolts (1) (6 used) to remove cover (2) and O-ring (3). When removing cover (2), slowly remove the cover while pressing the cover downward so that spring (4) does not fly off.
4. Remove spring (4), and element (5).
5. When installing new element (5) into the hydraulic oil tank, replace O-ring (3) with a new one at the same time.
6. Install cover (2) with bolts (1) (6 used).

   Tightening Torque: 50 N·m (5 kgf·m)
7. Bleed air from the hydraulic system and check the hydraulic oil level after replacing the element.

   (Refer to the descriptions for "Air Bleeding Procedures")

   If the machine is operated with air mixed in the hydraulic circuit, damage to the pump may result.

NOTE: Replace element (5) at the regular interval to keep hydraulic oil clean and to extend the service life of the hydraulic components.

6 Replace Pilot Oil Filter

--- every 1000 hours

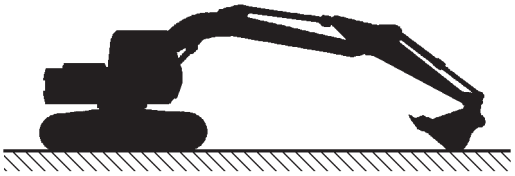

M1CC-07-002

CAUTION: Hydraulic oil becomes hot and pressurized during operation. Severe burns may result if skin comes in contact with escaping hydraulic oil immediately after operation. Wait for the oil to cool before starting any maintenance work.

1. Park the machine following the same procedures as described on page 7-7 for preparation for inspection and maintenance.

CAUTION: The hydraulic oil tank is pressurized. Push the pressure release button on the air breather before removing the filter cartridge.

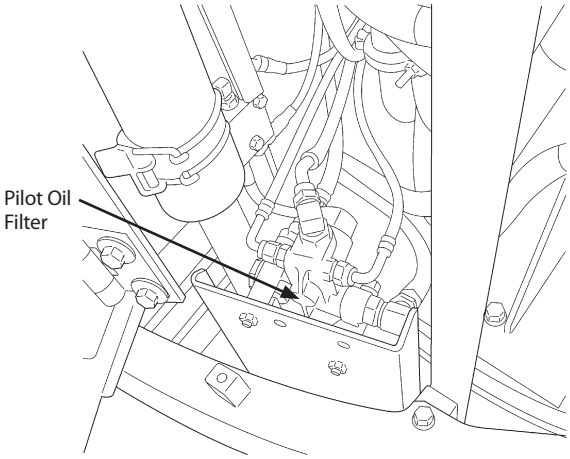

MDED-07-039

2. Push the pressure release button on the air breather.
3. Remove the filter cartridges of pilot oil filter (2) by turning it counterclockwise with the filter wrench.
4. Clean the filter O-ring contact area on filter head (1).
5. Apply a thin film of clean oil to the gasket of new filter (2).
6. Install new filter (2). Turn the filter cartridge clockwise by hand until the O-ring touches the contact area. Be sure not to damage the O-ring when installing filter (2).

IMPORTANT: Do not re-use the filter cartridge.

7. Bleed air from the hydraulic system and check the hydraulic oil level after replacing the element.

   (Refer to the descriptions for "Air Bleeding Procedures")

   If the machine is operated with air mixed in the hydraulic circuit, damage to the pump may result.

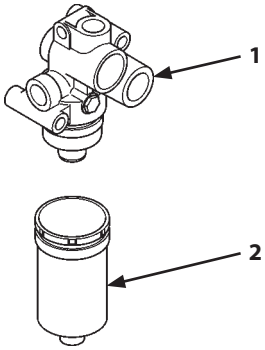

M1P1-07-067

NOTE: Replace element (2) at the regular interval to keep hydraulic oil clean and to extend the service life of the hydraulic components.

7 **Replace Swing Drain Filter**
--- every 4000 hours

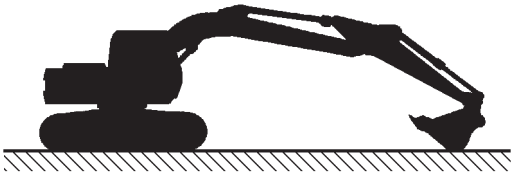

M1CC-07-002

CAUTION: Hydraulic oil becomes hot and pressurized during operation. Severe burns may result if skin comes in contact with escaping hydraulic oil immediately after operation. Wait for the oil to cool before starting any maintenance work.

1. Park the machine following the same procedures as described on page 7-7 for preparation for inspection and maintenance.

CAUTION: The hydraulic oil tank is pressurized. Push the pressure release button on the air breather before removing the filter cartridge.

2. Push the pressure release button on the air breather.
3. Remove the filter cartridges of swing drain filter by turning it counterclockwise with the filter wrench.
4. Clean the filter gasket contact area on filter head.
5. Apply a thin film of clean oil to the gasket of new filter.
6. Install new filter. Turn the filter cartridge clockwise by hand until the gasket touches the contact area. Be sure not to damage the gasket when installing filter.

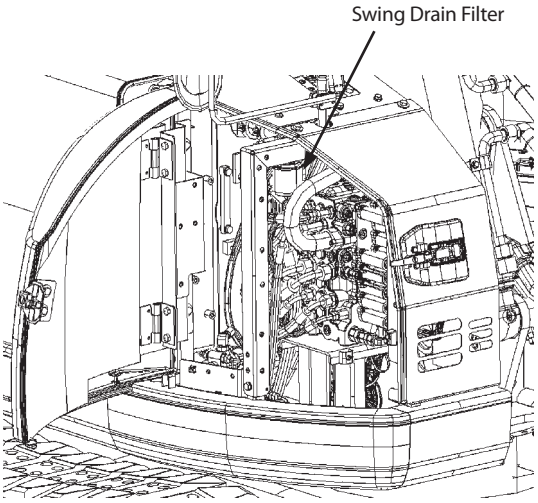

MDEC-07-012

IMPORTANT: Do not re-use the filter cartridge.

7. Tighten the filter cartridge 1-1/4 turns more using the filter wrench. Be careful not to overtighten.
8. Bleed air from the hydraulic system and check the hydraulic oil level after replacing the element.

   (Refer to the descriptions for "Air Bleeding Procedures")

   If the machine is operated with air mixed in the hydraulic circuit, the damage to the pump may result.

NOTE: Replace the element at the regular interval to keep hydraulic oil clean and to extend the service life of the hydraulic components.

8 **Replace Air Breather Element**
--- every 4000 hours

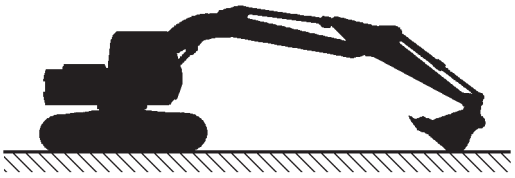

M1CC-07-002

CAUTION: Hydraulic oil becomes hot and pressurized during operation. Severe burns may result if skin comes in contact with escaping hydraulic oil immediately after operation. Wait for the oil to cool before starting any maintenance work.

Procedures:

1. Park the machine following the same procedures as described on page 7-7 for preparation for inspection and maintenance.
2. Before replacing element (3), be sure to bleed air pressure from the hydraulic oil tank by pressing the air bleed valve on the hydraulic oil tank.
3. Rotate cover (2) clockwise approx. 1/4 turns. Remove cap (1) by rotating it counterclockwise.
4. Rotate cover (2) counterclockwise and remove it. Remove element (3).
5. Install new element (3). Tighten to install cover (2) until cover (2) comes in contact with element (3). Then, further tighten the cover 1/4 turn.
6. Securely tighten cap (1) clockwise by hand. While holding cap (1) by hand so that cap (1) does not rotate, securely tighten cover (2) by rotating counterclockwise 5 to 10° by hand.
7. Take care never to allow water and/or contaminant to stay between cover (2) and body (4) (air breathing port).

NOTE: Replace element (3) at the regular interval to keep hydraulic oil clean and to extend the service life of the hydraulic components.

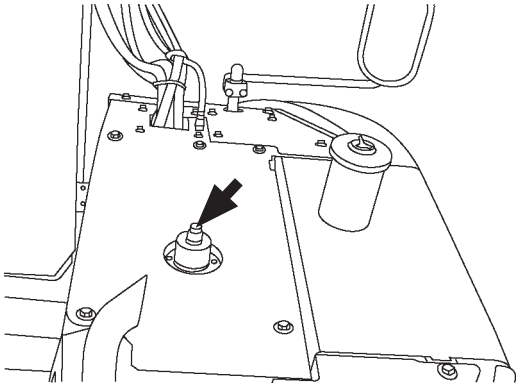

M1P1-07-010

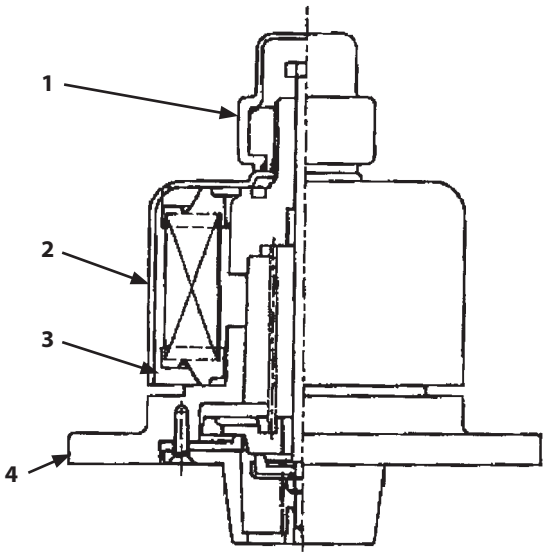

M1G6-07-001

9 **Check Hoses and Lines**

---daily

--- every 250 hours

WARNING:

- **Hydraulic oil and lubricant leaks can lead to fire that may result in serious injury. Check for missing or loose clamps, kinked hoses, lines or hoses that rub against each other, damaged oil cooler, and loose oil cooler flange bolts, for leaks.**
- **Escaping oil under pressure can penetrate the skin causing serious injury. To avoid this hazard, search for oil leaks with a piece of cardboard. Take care to protect hands and body from high-pressure fluids. If an accident occurs, see a doctor familiar with this type of injury immediately.**
- **Tighten, repair or replace any missing, loose or damaged clamps, hoses and lines.**
- **Do not bend or strike high-pressure lines.**
- **Never install bent or damaged hoses or lines.**

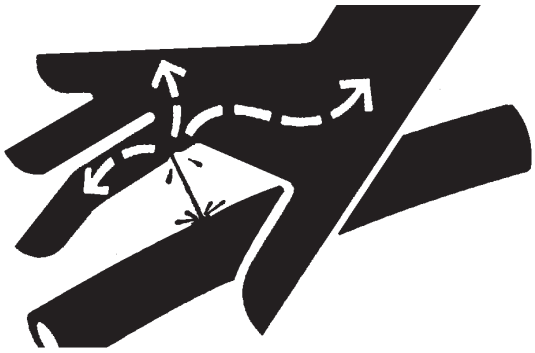

SA-031

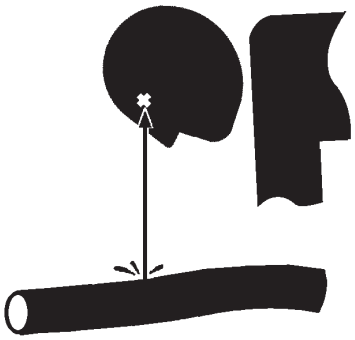

SA-292

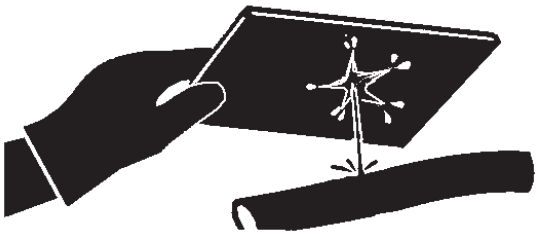

SA-044

According to the check points shown below, check hoses and lines for oil leaks and damage.
If any abnormality is found, replace or retighten as instructed in the table.

Hose

Interval (hours)	Check Points	Abnormalities	Remedies
Daily	Hose covers	Leak (1)	Replace
	Hose ends	Leak (2)	Replace
	Fittings	Leak (3)	Retighten or replace hose or O-ring

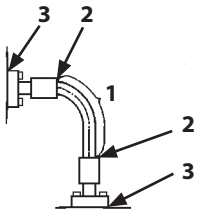

M137-07-008

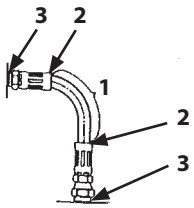

M115-07-145

Interval (hours)	Check Points	Abnormalities	Remedies
Every 250 hours	Hose covers	Damage or leak (4)	Replace
	Hose ends	Damage or leak (5)	Replace
	Hose covers	Exposed reinforcement (6)	Replace
	Hose covers	Crack or blister (7)	Replace
	Hose	Bend (8), Collapse (9)	Replace
	Hose ends and Fittings	Deformation or corrosion (10)	Replace

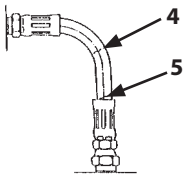

M115-07-146

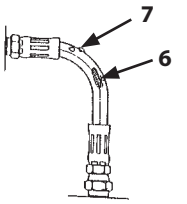

M115-07-147

Lines

Interval (hours)	Check Points	Abnormalities	Remedies
Daily	Contact surfaces of flange joints	Leak (11)	Replace
	Bolts	Loose or leak (11)	Retighten or replace O-ring
	Welded surfaces on flange joints	Leak (12)	Replace
Every 250 hours	Flange joint neck	Crack (13)	Replace
	Welded surfaces on flange joints	Crack (12)	Replace
	Clamps	Missing or deformation Loose bolts	Replace or retighten

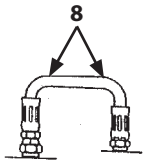

M115-07-148

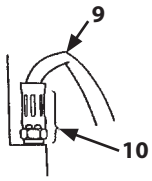

M115-07-149

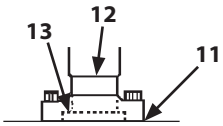

M137-07-001

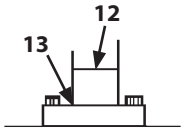

M137-07-007

Hose and Lines

Interval (hours)	Check Points	Abnormalities	Remedies
Daily Check	Flexible master coupling	Leak (14)	Retighten or replace

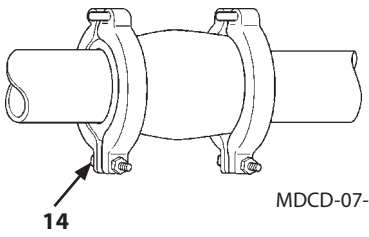

MDCD-07-044

Oil Cooler

Interval (hours)	Check Points	Abnormalities	Remedies
Every 250 hours	Rubber Hose	Leak (15)	Retighten or replace
	Oil Cooler	Leak (16)	Replace

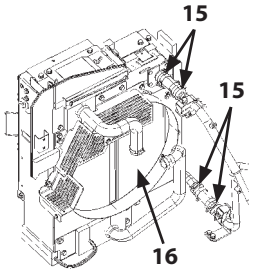

MDED-07-040

Service Recommendations for Hydraulic Fittings

Two hydraulic fitting designs are used on this machine.

- Flat Face O-ring Seal Fitting (ORS Fitting)
  O-ring (1) is used on the sealing surfaces of adapter (2) to prevent oil leakage.

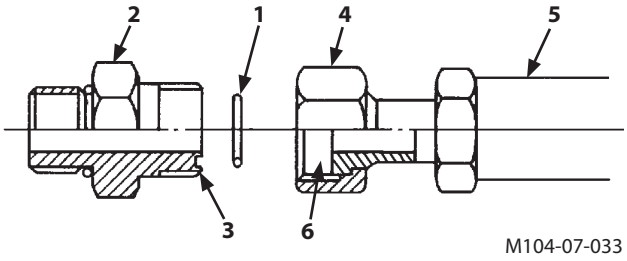

M104-07-033

Precautions for Use

1. Replace O-ring (1) with a new one when assembling fittings.
2. Check that O-ring (1) is properly fitted in O-ring groove (3). Tighten union (4).

   Tightening union (4) with O-ring (1) out of the groove may damage O-ring (1) and cause oil leak.
3. When assembling fittings, take care not to make a dent on O-ring groove (3) of adaptor (2) and sealing surface (6) on hose (5) or valve side. Failure to do so may result in damage to O-ring (1) leading to oil leak.
4. If oil leaks from a loose connection of union (4), do not tighten fitting (2). Open the connection, replace O-ring (1) with new one and check for correct O-ring position before tightening the connection.

Tightening Torque:
Tighten fittings to the torque values shown below.

±10 %

Wrench size (mm)		27	32	36	41, 46
Tightening Torque:	N·m	95	140	180	210
	(kgf·m)	(9.5)	(14)	(18)	(21)

- Metal Face Seal Fittings

Fittings are used on smaller diameter joint and consist of a metal flare (10) and a metal flare seat (9).

1. Inspect flare (10) and flare seat (9). They must be free of dirt or obvious defects.
2. Tighten fitting (7) by hand.
3. Tighten fitting (7) or nut (8) to the torque values shown. Do not allow hose (5) to twist when tightening fittings.

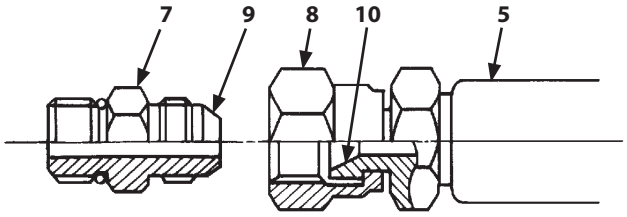

M202-07-051

Wrench size (mm)		17	19	22	27
Torque	N·m	25	30	40	80
	(kgf·m)	(2.5)	(3)	(4)	(8)

- Bent Tube

Tighten bent tube (11) mounted on the signal control valve to the torque values shown below.

Wrench size (mm)		17, 19
Tightening torque	N·m	35
	(kgf·m)	(3.5)

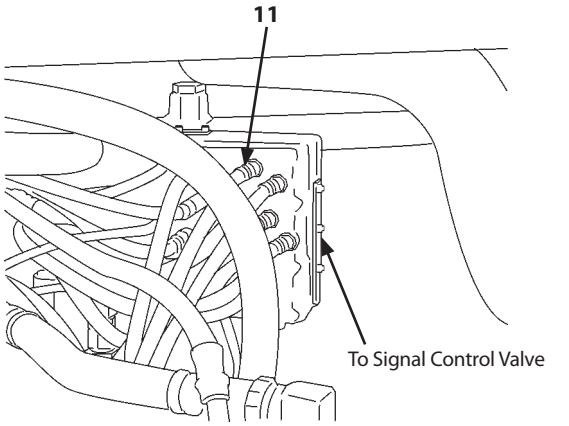

M1U1-07-043

E. Fuel System

WARNING: Beware of fire. Fuel is flammable. Keep fuel away form fire hazards.

IMPORTANT: Always fill the fuel tank with the specified diesel fuel. Failure to do so may cause engine trouble and also making it difficult for the engine to start.

Recommended Fuel

Use only super high quality or high quality DIESEL FUEL (JIS K-2204) (ASTM 2-D). Kerosene must NOT be used. Besides, using bad quality fuel, drainage agent, fuel additives, gasoline, kerosene or alcohol refueled or mixed with specified fuel may deteriorate performance of fuel filters and cause sliding problem at lubricated contacts in the injector. It also affects the engine parts, leading to malfunction. Using fuel other than ultra low-sulfur or low-sulfur diesel fuel has adverse effects on the engine which may result in malfunction.

Refueling

1. Park the machine following the same procedures as described on page 7-7 for preparation for inspection and maintenance.

CAUTION: Handle fuel carefully. Shut the engine off before fueling. Do not smoke while you fill the fuel tank or work on fuel system.

2. Check fuel level gauge (4) or fuel gauge (1) of the monitor panel. Add fuel if necessary.

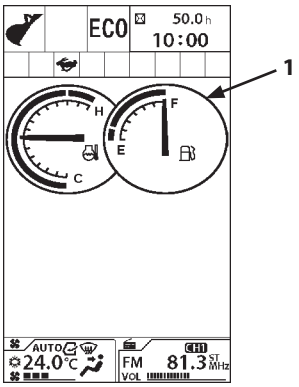

MDAA-01-001

IMPORTANT: Keep all dirt, dust, water and other foreign materials out of the fuel system when refilling fuel.

3. Remove cap (2) of fuel port.

[Cap (2) unlock procedures]
- Release the key lock.
- Pull up handle (3) and turn handle (3) counterclockwise for releasing cap (2) lock.
- Remove cap (2).

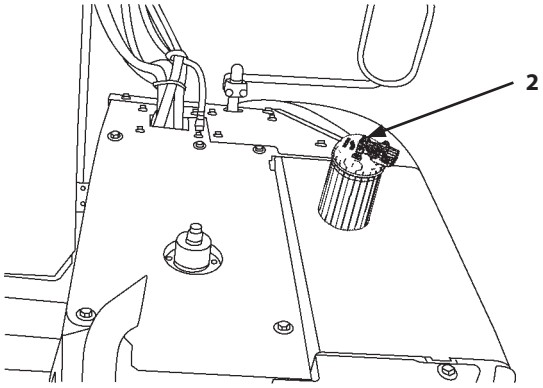

MDED-07-063

4. To avoid condensation, fill the tank at the end of each day's operation. Take care not to spill fuel on the machine or ground.

Model	Tank Capacity
ZX75US-5A	135 L (35.7 US gal)
ZX85USB-5A	120 L (31.7 US gal)

Do not fill the tank more than specified. Stop filling when a yellow mark on fuel level gauge (4) becomes visible. Be sure to position the fuel service nozzle so that any part of the nozzle does not obstruct rising of float-type fuel level gauge (4).

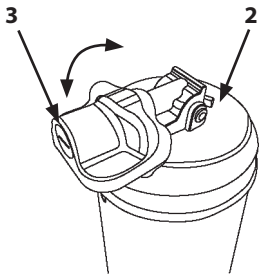

MLBA-07-094

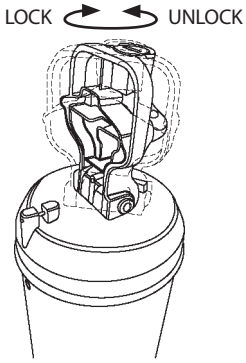

MLBA-07-093

IMPORTANT: Take precautions for Fueling with Automatic Fueling Device (Optional).

Avoid overfilling. Never fail to remove filler cap (2) when refueling withe the automatic fueling device and be sure to stop fueling when the yellow mark on the float (4) becomes visible.

5. Install cap (2) of fuel port.

[Cap (2) lock procedures]
- Install cap (2).
- Turn handle clockwise untill cap (2) is locked, and push down handle (3).
- Lock the key.

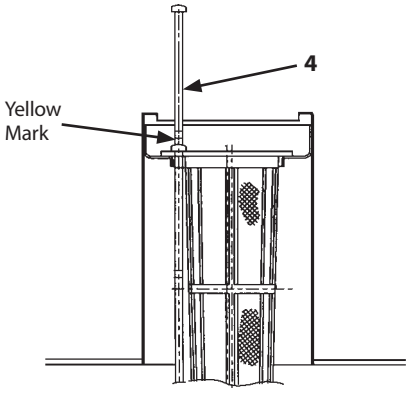

M157-07-060

1 **Drain Fuel Tank Sump**

--- daily

1. Park the machine following the same procedures as described on page 7-7 for preparation for inspection and maintenance.
2. Place 0.5 liters or larger capacity container under drain valve (1) to collect the drained water.
3. Open drain valve (1) to drain water and/or sediment through the drain hose.
4. After draining water, securely tighten drain valve (1).

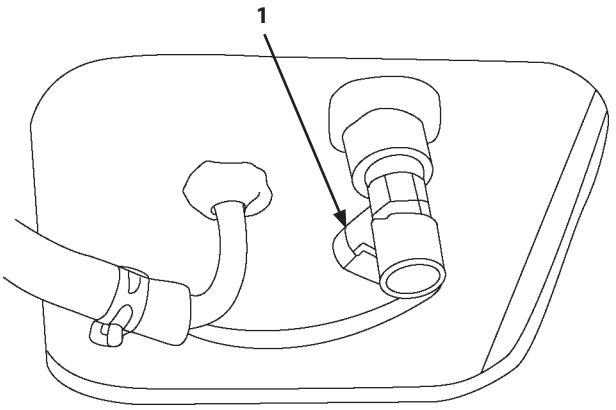

M1P1-07-016

2 **Check Water Separator**

Drain water --- every 8 hours (daily)

Water separator (3) is a device designed to separate water from the fuel. There is a float inside the case which buoys when water accumulates.
When the float rises to the water draining level, drain water.

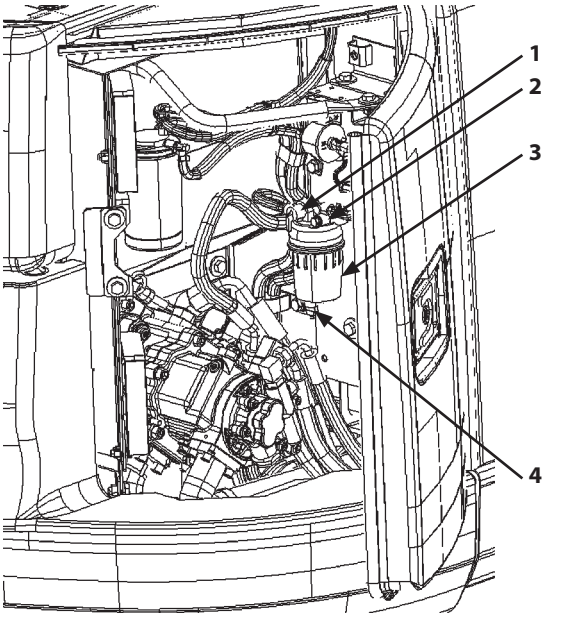

MDED-07-009

Drain Procedures

1. Park the machine following the same procedures as described on page 7-7 for preparation for inspection and maintenance.
2. Close cock (1) to stop feeding fuel.
3. Place 0.5 liters or larger capacity container under drain valve (4) to collect the drained water.
4. Loosen plug (2) at upper part of water separator (3). Loosen drain valve (4) at lower part of the case to drain water.
5. After draining water, securely tighten drain valve (4) and plug (2).
6. Return cock (1) to its original position (open).

IMPORTANT: After draining water from the water separator, bleed air from the fuel supply system.

Bleed Air from Fuel System

Air in the fuel system will cause the engine to start hard and/or run roughly. Be sure to bleed air from the system after replacing the fuel filter (6) or draining the tank.

Automatic bleeding device is provided on this machine.

1. Confirm that the fuel level is more than one-half of the tank capacity. If the fuel level is lower, automatic bleeding device will not operate. Add fuel.
2. Turn the key switch ON and hold for 10 to 15 seconds.
3. Start the engine and check the fuel system for fuel leaks.

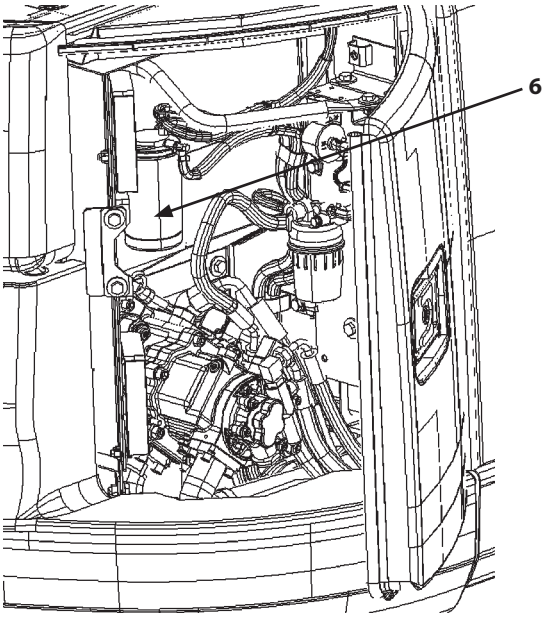

MDED-07-009

3 Replace Fuel Main Filter Element --- every 500 hours

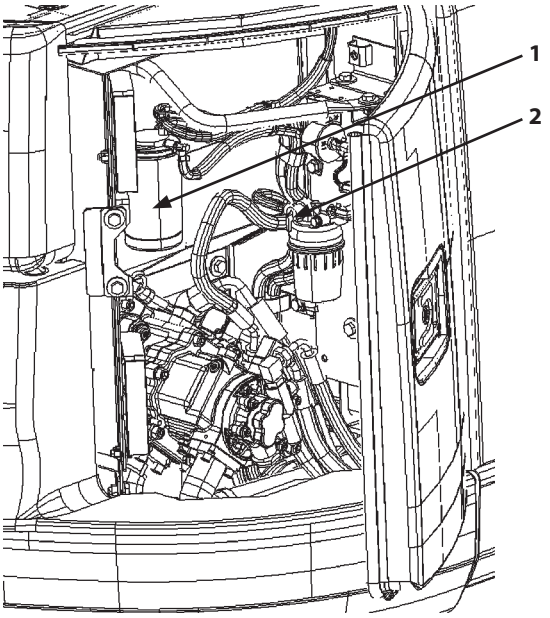

MDED-07-009

IMPORTANT:

- **Be sure to use only genuine Hitachi elements for the fuel main filter element. Failure to do so may deteriorate the engine performance and/or shorten the engine service life. Please be noted that all engine failures caused by using other manufacturers' elements are excluded from Hitachi Warranty Policy.**
- **Take care not to allow dirt and/or water to enter the fuel tank.**

Procedures:

1. Close cock (2).
2. Place 1 liter or larger capacity container under fuel main filter (1).
3. Remove fuel filter (1) using the filter wrench.
4. Clean the fuel filter (1) contact area.
5. Apply a thin layer of clean fuel to the gasket of new fuel filter (1).
6. Turn fuel filter (1) clockwise by hand until fuel filter (1) touches the contact area.
7. Tighten fuel filter (1) 1/2 turn more using the filter wrench. Be careful not to overtighten.

   Tightening Torque : 20 to 24 N·m (2.0 to 2.4 kgf·m)
8. Open cock (2).
9. Bleed Air from the Fuel System

   After replacing the fuel filter element, bleed air from the fuel supply system.

   (Refer to " 2 Bleed Air from Fuel System".)

4 Replace Fuel Pre-Filter Element --- every 500 hours

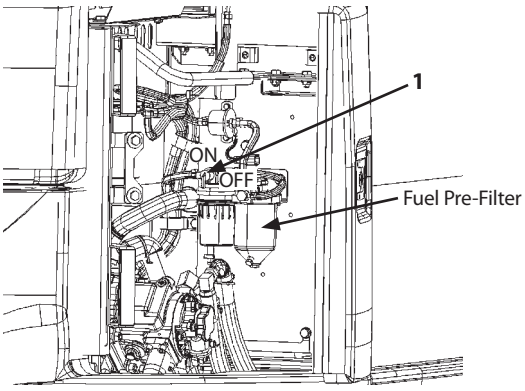

MDED-07-064

IMPORTANT:

- **Be sure to use only genuine Hitachi elements for the fuel pre-filter element. Failure to do so may deteriorate the engine performance and/or shorten the engine service life. Please be noted that all engine failures caused by using other manufacturers' elements are excluded from Hitachi Warranty Policy.**
- **Take care not to allow dirt and/or water to enter the fuel tank.**

Procedures:

1. Park the machine following the same procedures as described on page 7-7 for preparation for inspection and maintenance.
2. Close cock (1).
3. Place 1 liter or larger capacity container under drain plug (2).
4. Loosen air bleed plug (3) and drain plug (2). Drain fuel until fuel does not flow out of the filter.
5. Loosen bolt (4) and remove filter case (5).
6. Remove filter element (6).
7. Replace O-ring (7) and packing (8) with new one.
8. Install a new element. Tighten bolt (4).

   Tightening Torque : 30 to 40 N·m (3.0 to 4.0 kgf·m, 22 to 29 lbf·ft).

9. Tighten air bleed plug (3) and drain plug (2).

   Tightening Torque

   Air Bleed plug (3) : 30 to 40 N·m (3.0 to 4.0 kgf·m, 22 to 29 lbf·ft)
   Drain plug (2) : 13 to 17 N·m (1.3 to 1.7 kgf·m, 10 to 12 lbf·ft)

10. Open cock (1) on the bottom of the fuel tank.
11. Bleed Air from the Fuel System

    After replacing the fuel filter element, bleed air from the fuel supply system.

    (Refer to " 2 Bleed Air from Fuel System".)

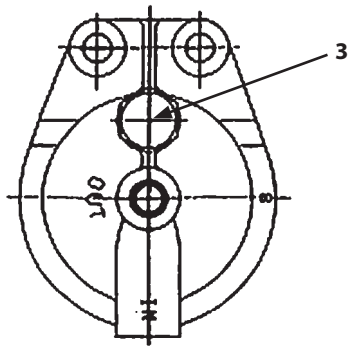

M1M0-07-041

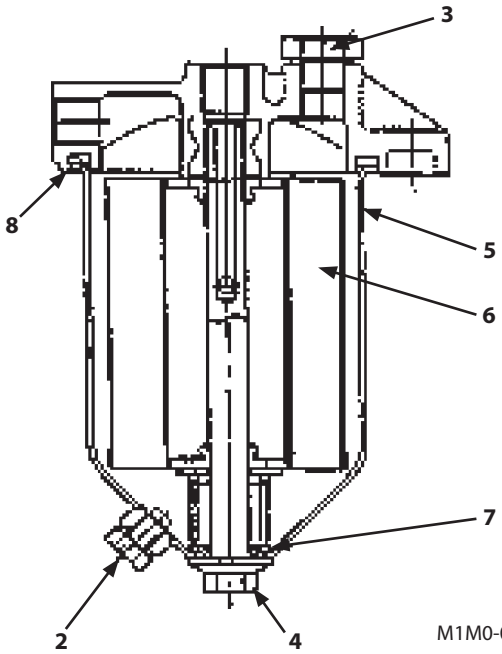

M1M0-07-042

5 Check Fuel Hoses

--- every 8 hours (daily)

--- every 250 hours

CAUTION: Fuel leaks can lead to fires that may result in serious injury.

- **Escaping combustible fluid can cause fires. Check for kinked hoses, hoses that rub against each other, and any fuel leaks.**
- **Repair or replace any loose or damaged hoses.**
- **Never reinstall bent or damaged hoses.**

According to the check points shown below, check hoses for oil leaks and damage.
If any abnormality is found, replace or retighten as instructed in the table.

Hose

Interval (hours)	Check Points	Abnormalities	Remedies
Daily	Hose ends	Leak (1)	Retighten or replace
	Hose covers	Wear, crack (2)	Replace
Every 250 hours	Hose covers	Crack (3)	Replace
	Hose ends	Crack (4)	Replace
	Hose	Bend (5), Collapse (6)	Replace
	Hose fittings	Corrosion (7)	Replace

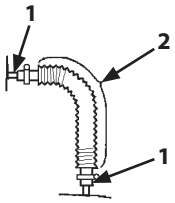

M137-07-003

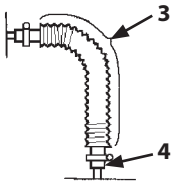

M137-07-004

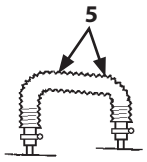

M137-07-005

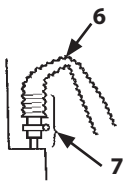

M137-07-006

F. Air Cleaner

1 **Clean Air Cleaner Outer Element**

--- every 250 hours or when the restriction indicator comes ON

2 **Replace Air Cleaner Outer and Inner Elements**

--- after cleaning six times or after one year

1. Park the machine following the same procedures as described on page 7-7 for preparation for inspection and maintenance.
2. Loosen clamps (2) to remove the cover.
3. Remove outer element (1).
4. Tap outer element (1) with the palm of your hand, NOT ON A HARD SURFACE.

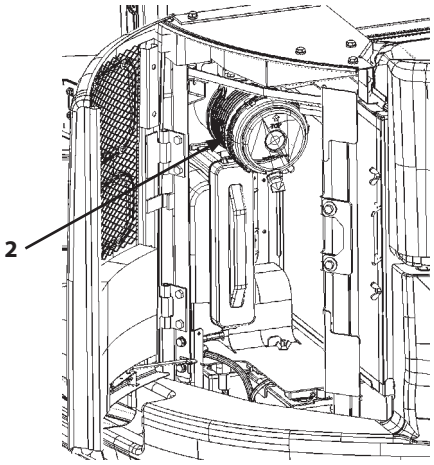

MDED-07-011

CAUTION: Use reduced compressed air pressure. (Less than 0.69 MPa (7 kgf/cm^2, 100 psi)). Clear area of bystanders, guard against flying chips, and wear personal protection equipment including goggles or safety glasses.

IMPORTANT: To clean element (1), avoid giving shocks or striking element with other objects.

5. Clean outer element (1) by blowing compressed air [less than 0.69 MPa (7 kgf/cm^2, 100 psi)] outward from the inside of the filter element. After cleaning, be sure to check element (1) for any damage. If any damage is found, replace the element with a new one.

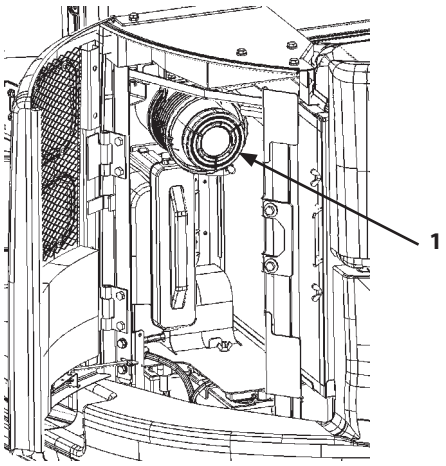

MDED-07-012

IMPORTANT: Do not reuse inner element.

6. In case the air filter restriction indicator lights soon after cleaning outer element (1) even if the cleaning times are less than 6 times, replace both outer and inner elements with new ones.
7. Clean the filter interior before installing outer element (1).
8. Install outer element (1).

IMPORTANT: Do not install the element and/or the cover forcibly when installing the clamps, element, and/or cover.

9. Install cover and tighten clamps (2).
10. Start the engine and run at slow idle.
11. Check the air filter restriction indicator on the monitor panel. If the air filter restriction indicator comes ON, stop the engine and replace outer element (1).

Replace Inner Element (optional)

IMPORTANT: Do not reuse the inner element (4).

1. After removing outer element (1), clean inside of air cleaner body by blowing compressed air pressure [less than 0.2 MPa (2 kgf/cm^2)] before removing inner element (4).
2. Then, replace inner element (4) with new one.

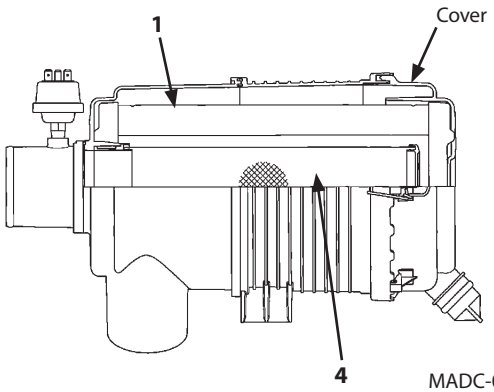

MADC-07-008

G. Cooling System

Coolant

IMPORTANT: Use soft water as a coolant. Do not use strong acid or alkaline water. Use the coolant with genuine Hitachi Long-Life Coolant (LLC) mixed by 30 to 50 %.

If a coolant mixed with less than 30 % of Hitachi Long-Life Coolant is used, service life of the cooling parts may be shortened due to damage by freezing or corrosion of coolant system parts.

Antifreeze Mixing Ratio

Air Temperature [°C]	Mixing Ratio [%]	Antifreeze		Soft water	
		Liters	US gal	Liters	US gal
-1	30	2.1	0.79	4.9	1.85
-15	35	2.5	0.93	4.5	1.71
-20	40	2.8	1.06	4.2	1.58
-25	45	3.2	1.19	3.8	1.45
-30	50	3.5	1.32	3.5	1.32

Precautions for handling antifreeze

CAUTION: Antifreeze is poisonous.

- **Antifreeze is poisonous; if ingested, it can cause serious injury or death. Induce vomiting and get emergency medical attention immediately.**
- **If antifreeze is accidentally splashed into eyes, flush with water for 10 to 15 minutes and get emergency medical attention.**
- **When storing antifreeze, be sure to keep it in a clearly marked container with a tight lid. Always keep ANTIFREEZE out of the reach of children.**
- **Use attention to fire hazards. LLC is specified as a dangerous substance in the fire protection law.**
- **When disposing of LLC, be sure to comply with all local regulations. When storing or disposing of antifreeze, be sure to comply with all local regulations.**

1 **Check Coolant Level**

--- daily

With the engine cold, the coolant level must be between the FULL and LOW marks on coolant reservoir (2).
If the coolant level is below the low mark, add coolant to coolant reservoir (2).

CAUTION: Do not loosen cap (1) until the coolant temperature in the radiator becomes cool. Hot steam may spout out, possibly causing severe burns. After the coolant temperature has lowered, slowly loosen cap (1) to release the inside air pressure before removing cap (1).

If coolant reservoir (2) is empty, add coolant to the radiator and then to coolant reservoir (2).

- When refilling a long life coolant (LLC), use the same brand product and the same mixture ratio as already used in the machine.
- If only water is refilled, the mixture ratio in the long life coolant (LLC) is diluted so that anti-rust and antifreeze effect in the coolant will become deteriorated.

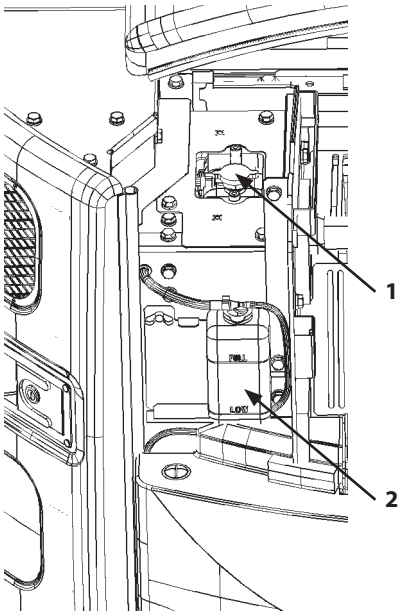

MDED-07-013

2 Check and Adjust Fan Belt Tension --- every 100 hours (first time after 50 hours)

IMPORTANT: Loose fan belt may result in insufficient battery charging, engine overheating, as well as premature belt wear. Belts that are too tight, however, can damage both bearings and belts.

Inspect

Check fan belt tension by depressing the midpoint between the fan pulley and the alternator pulley by your thumb with a depressing force of approximately 98 N (10 kgf, 22 lbf). Deflection must be within the value illustrated in the right. Visually check the belt for wear. Replace if necessary.

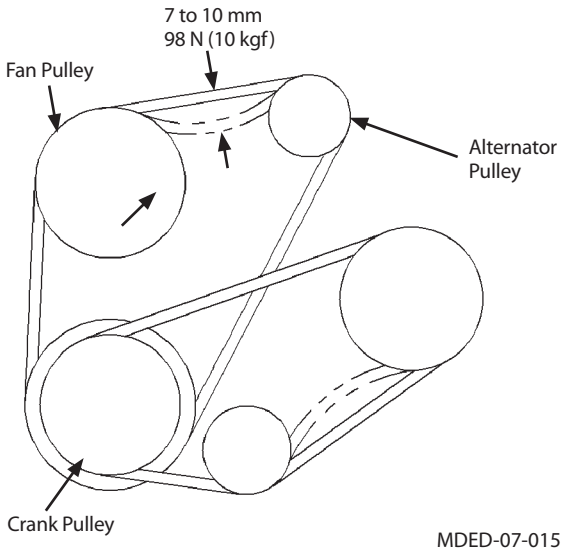

MDED-07-015

Adjust Drive Belt Tension

1. Loosen lock nut (1) at the top of alternator (3), and lock nut (4) at the bottom of alternator (3).
2. Adjust belt tension by moving alternator (3) forward or backward by using adjustment bolt (2).
3. Securely tighten lock nut (1) and (4)

IMPORTANT: When a new belt is installed, be sure to re-adjust the tension after operating the engine for 3 to 5 minutes at slow idle speed to be sure that the new belt is seated correctly.

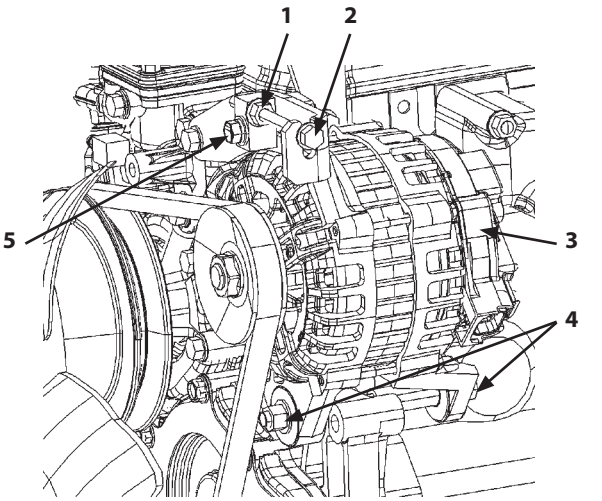

MDED-07-016

3 **Change Coolant**

--- twice a year (in spring and autumn)

NOTE: When genuine Hitachi Long-Life Coolant is used, change interval is once every two years (in autumn every other year) or every 4000 hours whichever comes first.

CAUTION: Do not loosen the radiator cap until the system has cooled. Hot steam may spout out, possibly causing severe burns. Loosen the cap slowly to the stop. Release all pressure before removing the cap.

IMPORTANT: Use fresh water or normal tap water as a coolant. Do not use strong acid or alkaline water. Use the coolant with genuine Hitachi Long-Life Coolant (LLC) mixed by 30 to 50 %.

Procedure:

1. Park the machine following the same procedures as described on page 7-7 for preparation for inspection and maintenance.
2. Remove the radiator front screen. Remove the radiator cap. Open drain cock (1) on the radiator and engine block to allow the coolant to drain completely. Remove impurities such as scale at the same time.
3. Close drain cock (1). Fill the radiator with soft water containing fewer impurities or tap water and a radiator cleaner agent. Run the engine at a speed slightly higher than slow idle; when the needle of the temperature gauge reaches the green zone, run the engine for about ten more minutes.
4. Stop the engine and open radiator drain cock (1). Flush out the cooling system with tap water, until draining water is clear. This helps remove rust and sediment.
5. Close drain cock (1). Fill the radiator with tap water and LLC at the specified mixing ratio. When adding coolant, do so slowly to avoid mixing air bubbles in the system.

   Run the engine to sufficiently bleed air from the cooling system.
6. After adding coolant, operate the engine for several minutes. Check the coolant level again, and add coolant if necessary.

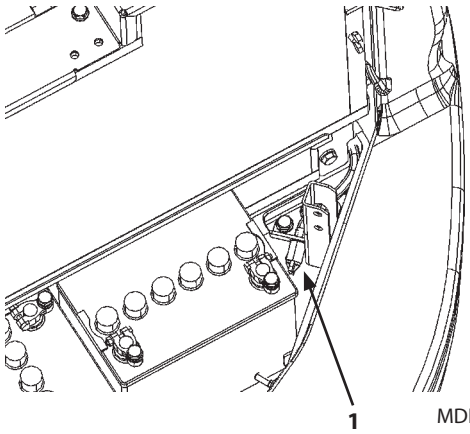

MDED-07-017

4 **Clean Radiator/Oil Cooler/Core**

Outside --- every 500 hours

Inside --- once a year

⚠ CAUTION: Use reduced compressed air pressure (Less than 0.2 MPa, 2 kgf/cm^2) for cleaning purposes. Wear personal protection equipment including eye protection.

IMPORTANT: If air with pressure of higher than 0.2 MPa (2 kgf/cm^2) or tap water with high delivery pressure is used for cleaning, damage to the radiator/oil cooler fins may result.

The radiator and the oil cooler are arranged in tandem. If dirt or dust is accumulated on them, cooling system performance decreases. Clean the radiator/oil cooler cores with compressed air pressure (lower than 0.2 MPa (2 kgf/cm^2)) or tap water. It will prevent a reduction in cooling system performance.

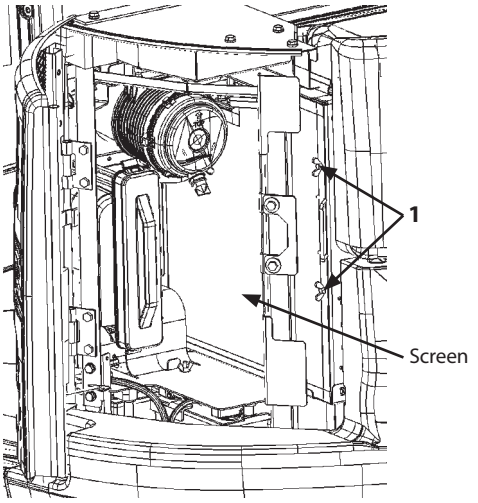

MDED-07-018

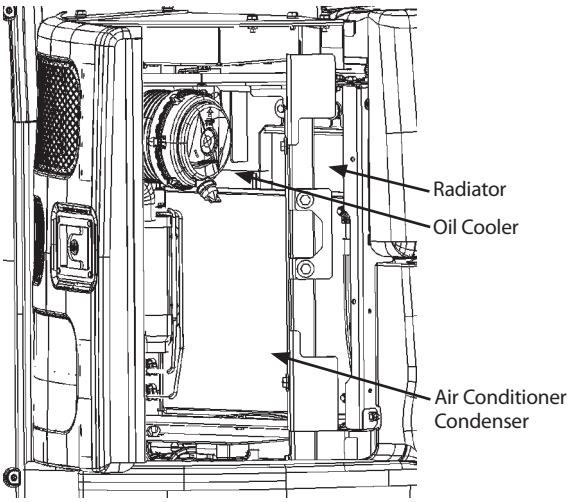

MDED-07-019

5 **Clean Oil Cooler and Radiator and Front Screen**

--- every 500 hours

IMPORTANT: Check the screen daily and replace it if necessary when the machine is operated in dusty areas.

Remove wing bolts (1) and screen.

6 **Clean Air Conditioner Condenser**

--- every 500 hours

IMPORTANT: Check the air conditioner condenser daily and clean it if necessary when the machine is operated in dusty areas.

H. Electrical System

IMPORTANT:

- **Improper radio communication equipment and associated parts, and/or improper installation of radio communication equipment effects the machine's electronic parts, causing involuntary movement of the machine.**

  Also, improper installation of electrical equipment may cause machine failure and/or a fire on the machine.

  Be sure to consult your authorized dealer when installing a radio communication equipment or additional electrical parts, or when replacing electrical parts.
- **Never attempt to disassemble or modify the electrical/electronic components. If replacement or modification of such components is required, contact your authorized dealer.**

1 Batteries

WARNING:

- **Battery gas can explode. Keep sparks and flames away from batteries.**
- **Do not leave cover (1) removed. Do not keep tools, metals or flammable materials around the battery or inside the battery room. If a metal tool is placed across the battery terminal and a vehicle component such as the engine block, sparks may be created, possibly resulting in fire and/or explosion.**
- **Do not continue to use or charge the battery when electrolyte level is lower than specified. Explosion of the battery may result.**
- **Charge the batteries in a well ventilated location.**
- **Sulfuric acid in battery electrolyte is poisonous. It is strong enough to burn skin, eat holes in clothing, and cause blindness if splashed into the eyes. Wearing eye protection and rubber gloves.**

Avoid hazard by:

1. **Filling batteries in a well-ventilated area.**
2. **Wearing eye protection and rubber gloves.**
3. **Avoiding breathing fumes when electrolyte is added.**
4. **Avoiding spilling or dripping electrolyte.**
5. **Using proper booster battery starting procedures.**

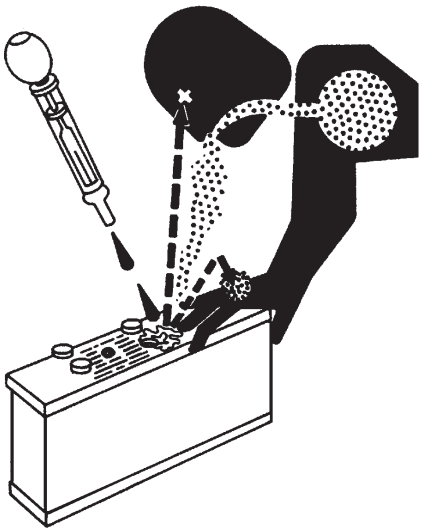

SA-036

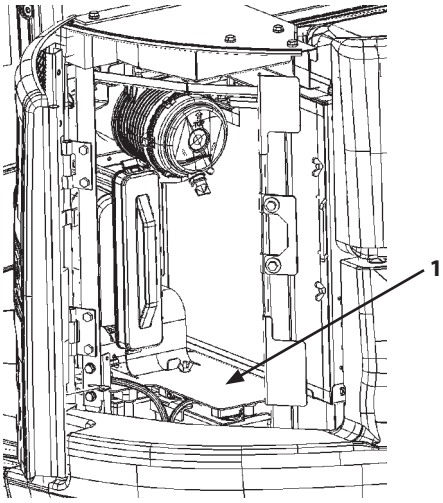

MDED-07-018

If you spill acid on yourself:

1. **Flush your skin with water.**
2. **Apply baking soda or lime to help neutralize the acid.**
3. **If splashed in eyes, flush with water for 10 to 15 minutes. Get medical attention immediately.**

If acid is swallowed:

1. **Do not induce vomiting.**
2. **Drink large amounts of water or milk.**
3. **Get medical attention immediately.**

IMPORTANT:

- **Add water to batteries in freezing weather before you begin operating your machine for the day, or else charge the batteries.**
- **If the battery is used with the electrolyte level lower than the specified lower level, the battery may deteriorate quickly.**
- **Do not refill electrolyte more than the specified upper level. Electrolyte may spill, damaging the painted surfaces and/or corroding other machine parts.**

NOTE: In case electrolyte is refilled more than the specified upper level line or beyond the bottom end of the sleeve, remove the excess electrolyte until the electrolyte level is down to the bottom end of the sleeve using a pipette. After neutralizing the removed electrolyte with sodium bicarbonate, flush it with plenty of water, otherwise, consult the battery manufacturer.

Electrolyte Level Check

--- every month

1. Check the electrolyte level at least once a month.
2. Park the machine on level ground and stop the engine.
3. Check the electrolyte level.

3.1 When checking the level from the battery side: Clean around the level check lines with a wet towel. Do not use a dry towel. Static electricity may be developed, causing the battery gas to explode. Check if the electrolyte level is between U.L (Upper Level) and L.L (Lower Level). In case the electrolyte level is lower than the middle level between the U.L and L.L, immediately refill distilled water or commercial battery fluid. Be sure to refill with distilled water before recharging (operating the machine). After refilling, securely tighten the filler plug.

3.2 When impossible to check the level from the battery side or no level check mark is indicated on the side: After removing the filler plug from the top of the battery. Check the electrolyte level by viewing through the filler port. It is difficult to judge the accurate electrolyte level in this case. Therefore, when the electrolyte level is flush with the U.L, the level is judged to be proper. Then, referring to the right illustrations, check the level. When the electrolyte level is lower than the bottom end of the sleeve, refill with distilled water or commercial battery fluid up to the bottom end of the sleeve. Be sure to refill with distilled water before recharging (operating the machine). After refilling, securely tighten the filler plug.

3.3 When an indicator is available to check the level, follow its check result.

4. Always keep around the battery terminals clean to prevent battery discharge. Check terminals for loose and/or rust. Coat terminals with grease or petroleum jelly to prevent corrosion build up.



M146-07-109

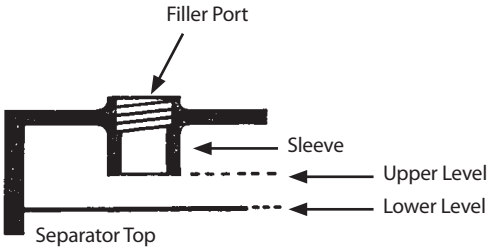

M146-07-110

Proper



Since the electrolyte surface touches the bottom end of the sleeve, the electrolyte surface is raised due to surface tension so that the electrode ends are seen curved.

M146-07-111

Lower



When the electrolyte surface is lower than the bottom end of the sleeve, the electrode ends are seen straight.

M146-07-112

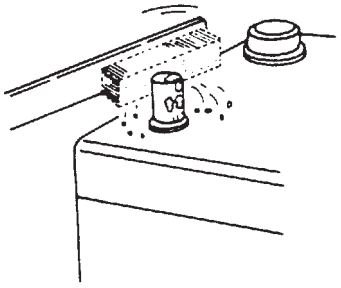

M409-07-072

Check Electrolyte Specific Gravity

--- every month

WARNING: Battery gas can explode. Keep sparks and flames away from batteries. Use a flashlight to check the battery electrolyte level.

Sulfuric acid in battery electrolyte is poisonous. It is strong enough to burn skin, eat holes in clothing, and cause blindness if splashed into the eyes.

Never check the battery charge by placing a metal object across the posts. Use a voltmeter or hydrometer.

Always remove the grounded (-) battery clamp first and replace it last.

Avoid hazard by:

1. Filling batteries in a well-ventilated area.

2. Wearing eye protection and rubber gloves.

3. Avoiding breathing fumes when electrolyte is added.

4. Avoiding spilling or dripping electrolyte.

5. Using proper booster battery starting procedures.

If you spill acid on yourself:

1. Flush your skin with water.

2. Apply baking soda or lime to help neutralize the acid.

3. If splashed in eyes, flush with water for 10 to 15 minutes. Get medical attention immediately.

If acid is swallowed:

1. Do not induce vomiting.

2. Drink large amounts of water or milk.

3. Get medical attention immediately.

IMPORTANT: Check the specific gravity of the electrolyte after it is cooled, not immediately after operation.

Check the electrolyte specific gravity in each battery cell.
The lowest limit of the specific gravity for the electrolyte varies depending on electrolyte temperature. The specific gravity should be kept within the range shown below. Charge the battery if the specific gravity is below the limit.

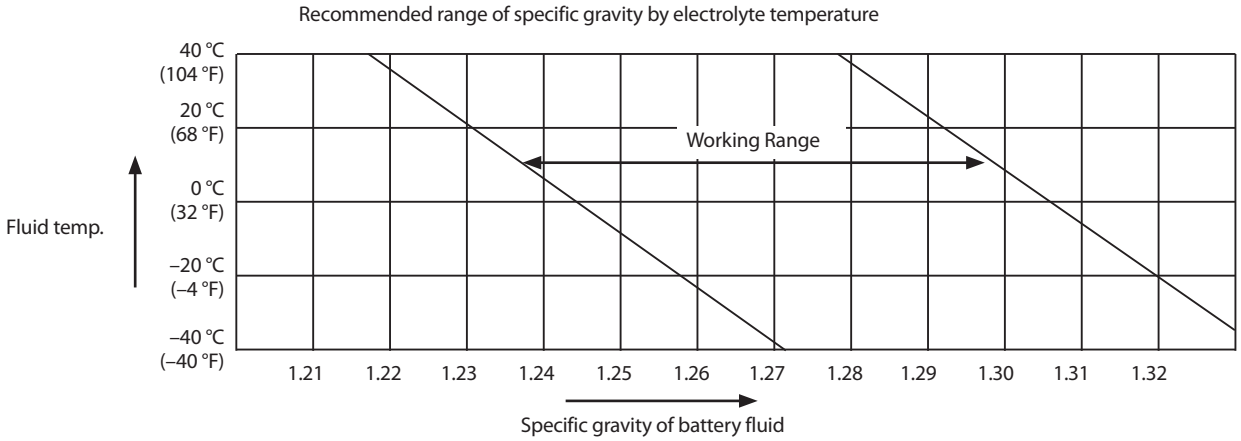

Replace Batteries

Your machine has two 12-volt batteries with negative (-) ground.
If one battery in a 24-volt system has failed but the other is still good, replace the failed battery with one of the same type. For example, replace a failed maintenance-free battery with a new maintenance-free battery. Different types of batteries may have different rates of charge. This difference could overload one of the batteries and cause it to fail.

2 Replacing Fuses

--- as necessary

If any electrical equipment fails to operate, first check the fuses. Fuse box is located behind the operator's seat.

NOTE:

- *One each spare fuse for respective fuse capacities is provided in the fuse box.*
- *A fuse removing jig is provided in the fuse box.*

Fuse Box A

10- CONTROLLER 5 A
9- BACKUP 10 A
8- SPARE
7- START 5 A
6- OPTION2 (ALT) 20 A
5- OPTION1 (ALT) 5 A
4- SOLENOID 20 A
3- HEATER 20 A
2- WIPER 10 A
1- LAMP 20 A
20- OPTION3 (BATT) 5 A
19- HORN 10 A
18- IDLE STOP 5 A
17- FUEL PUMP 5 A
16- POWER ON 5 A
15- AUX. 10 A
14- MONITOR 5 A
13- LIGHTER 10 A
12- RADIO 5 A
11- DC-DC 20 A

Fuse BoxB

30- SPARE
29- SPARE
28- SPARE
27- AUX.3 5 A
26- QUICK HITCH 5 A
25- IMOBI. 5 A
24- 12V UNIT 10 A
23- CAB LAMP REAR 10 A
22- CAB LAMP FRONT 10 A
21- SEAT HEATER 10 A
40- SPARE
39- SPARE
38- SPARE
37- SPARE
36- SPARE
35- SPARE
34- AUX.2 10 A
33- WARNING LAMP 10 A
32- CAB LAMP FRONT+2 10 A
31- SEAT COMPR. 10 A

Fuse Box C

41- DC-DC (E-ECU) 25 A

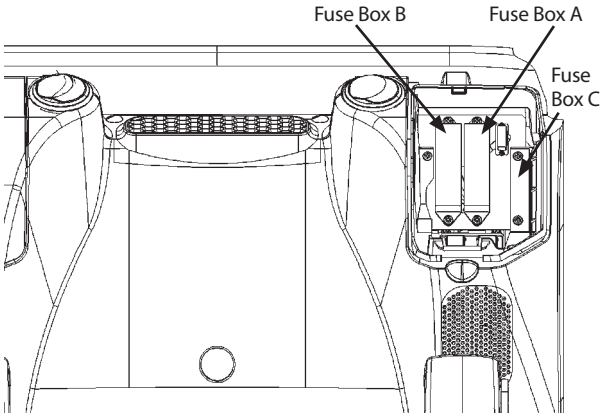

ZX75US-5A MDCN-01-010

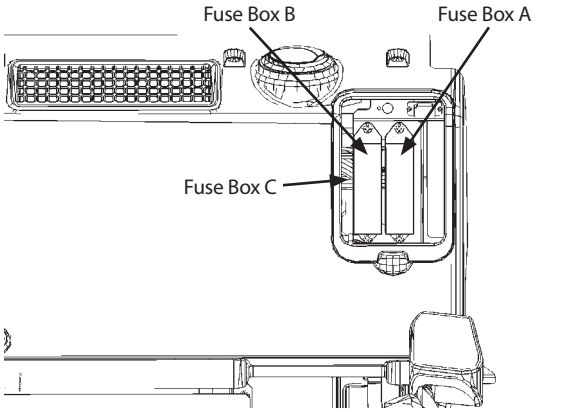

ZX85USB-5A MDED-01-012

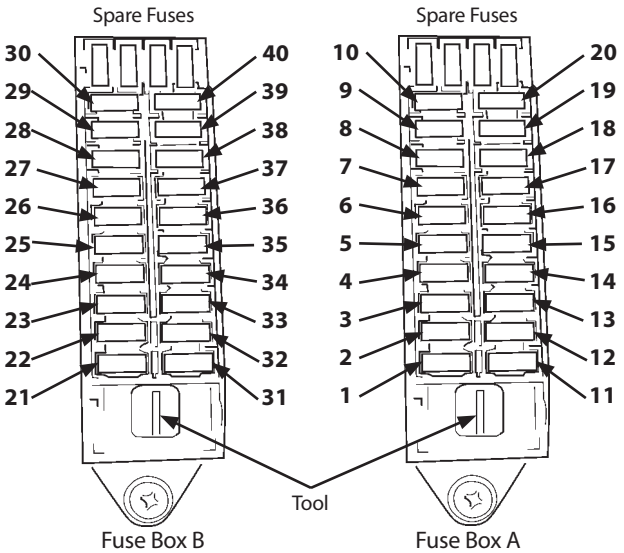

M1GR-01-003 M1GR-01-003

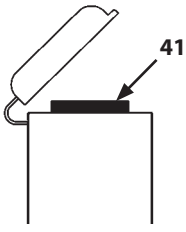

MDED-01-525

- Slow Blow Fuse (Main Fuse)
  In case the starter won't rotate even if the key switch is turned to the START position, slow blow fuse may be the cause of the trouble. Remove the cover next to the engine coolant reservoir to check the fuse. Replace it if blown.

21- YELLOW
60 A

22- WHITE
25 A

23- RED
50 A

24- BLACK
65 A

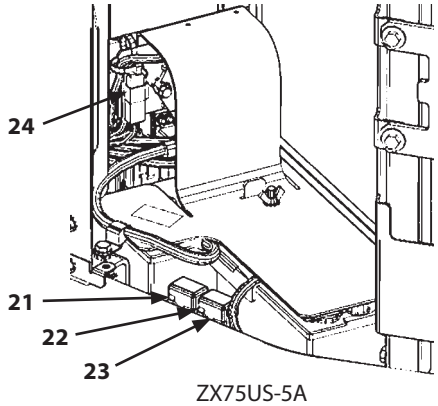

ZX75US-5A
Serial No. 80001-81359

MDED-07-068

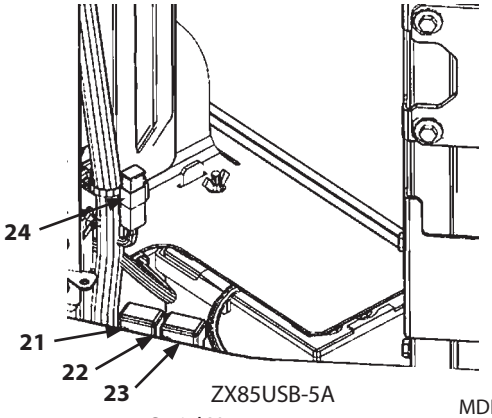

ZX85USB-5A
Serial No. 100001-101834

MDED-07-069

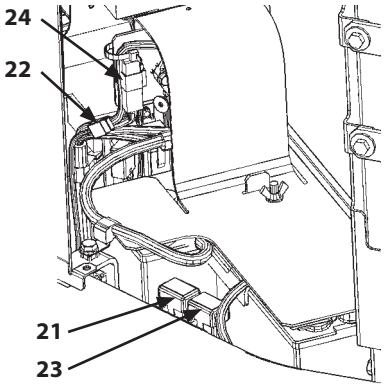

ZX75US-5A
Serial No. 81360 and up

MDEB-07-001

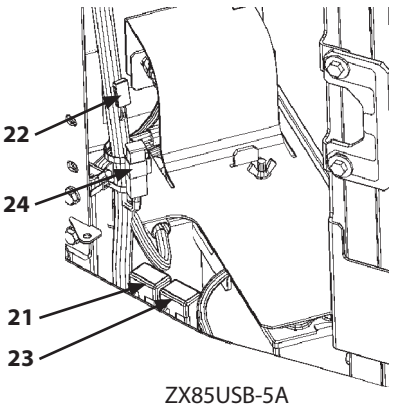

ZX85USB-5A
Serial No. 101835 and up

MDEB-07-002

I. Miscellaneous

1 **Check and Replace Bucket Teeth**
--- daily

Check bucket teeth (1) for wear and looseness.
Replace teeth (1) if tooth wear exceeds the designated service limit shown below.

	New	Limit of Use
A mm (in)	156 (6.1)	80 (3.1)

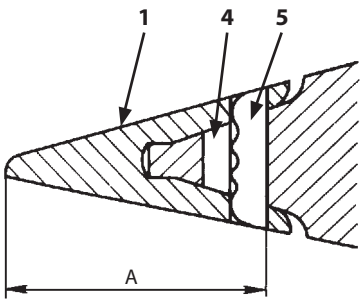

M104-07-056

Replace

CAUTION:

- **Guard against injury from flying pieces of metal.**
- **Wear hard hat or safety glasses, and safety equipment appropriate to the job.**

1. Use hammer (2) and drift (3) to drive out locking pin (5). Take care not to damage lock rubber (4).
2. Check lock pin (5) and lock rubber (4). Short locking pins and damaged rubber pin locks must be replaced with new ones.

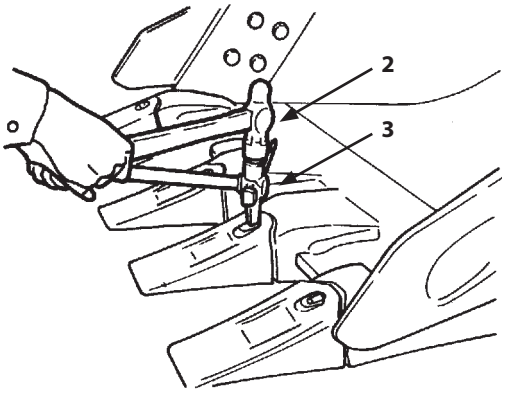

M104-07-116

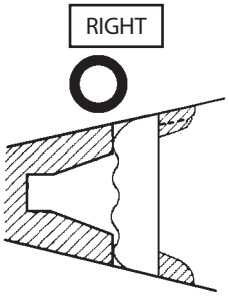

M104-07-118

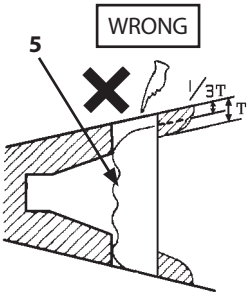

Flush one end of the locking pin to evaluate. In this instance, the locking pin is too short.
M104-07-058

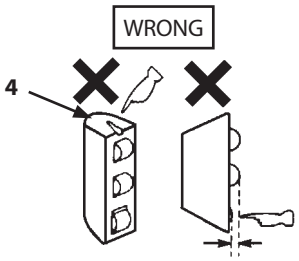

Crack on the rubber. The steel ball may come out.

The steel ball dents when pushing the ball.

M104-07-059

3. Clean shank (6) surface.
4. Install rubber pin lock (4) into shank (6) hole as shown.

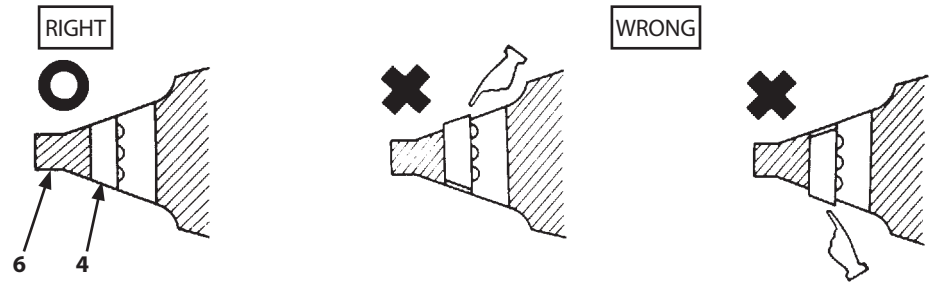

M104-07-060

5. Position new tooth (1) over shank (6).

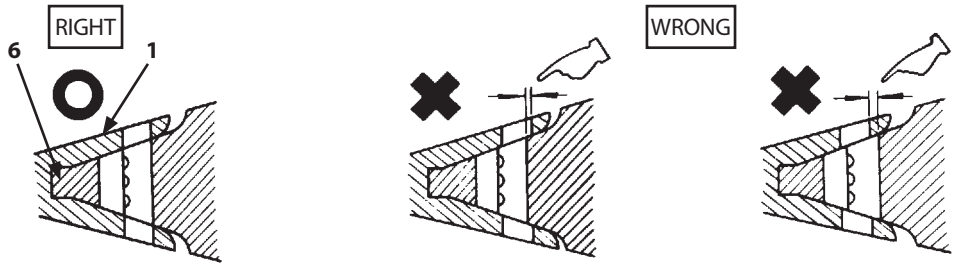

M104-07-061

6. Drive locking pin (5) fully into the hole as shown.

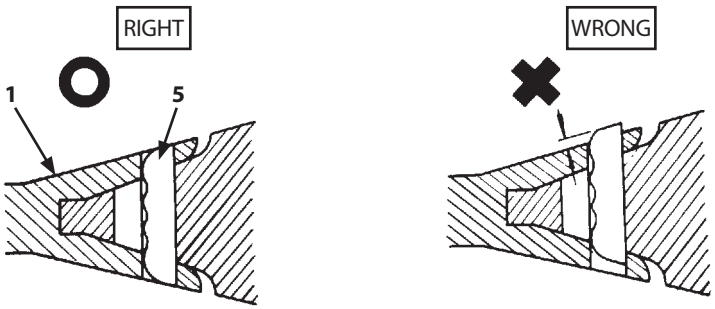

M104-07-062

2 Change Bucket

CAUTION: When driving the connecting pins in or out, guard against injury from flying pieces of metal or debris. Wear hard hat or safety glasses, and safety equipment appropriate to the job.

Before starting converting work, keep bystanders clear of the machine. Slowly move the front attachment. When using a signal person, coordinate hand signals before starting.

Removal

1. Place the bucket in a stable position.
2. Slide the O-rings out of the way, as shown.
3. Remove bucket pins A and B to separate the arm and bucket.

Installation

1. Clean the pins and pin bores. Apply sufficient grease to the pins and pin bores.
2. Place the new bucket in stable position as shown in the figure.
3. Fit the arm and alternate bucket. Be sure the bucket will not roll. Install bucket pins A and B.
4. Install the locking pins and snap rings on pins A and B.
5. Install O-rings to the specified positions.
6. Apply grease to each pin.
7. Start the engine and run at slow idle. Slowly operate the bucket in both directions to check for any interference in bucket movement.

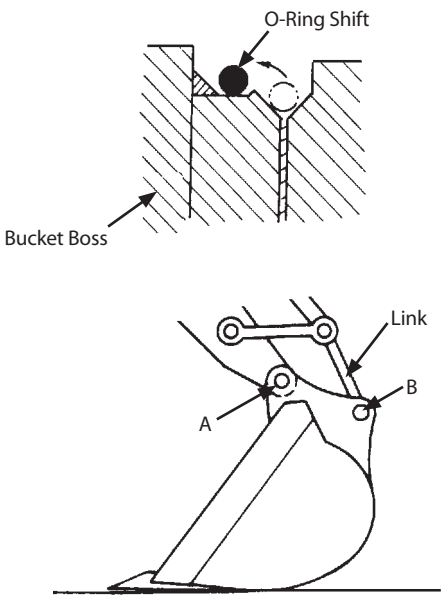

M104-07-063

3 Convert Bucket Connection Into Face Shovel

CAUTION: When driving the connecting pins in or out, guard against injury from flying pieces of metal or debris. Wear hard hat or safety glasses, and safety equipment appropriate to the job.

Converting the bucket connection allows you to use the machine as a face shovel. Before starting converting work, keep bystanders clear of the machine. Slowly move the front attachment. When using a signal person, coordinate hand signals before starting.

Procedure:

1. Place the bucket in a stable position.
2. Slide the O-rings out of the way, as shown.
3. Remove bucket pins A and B to separate the arm and bucket.

   Clean the pins and pin bores. Apply sufficient grease to the pins and pin bores.
4. Turn the bucket 180°. Be sure the bucket will not roll.
5. Fit the arm and alternate bucket. Be sure the bucket will not roll. Install bucket pins A and B.
6. Install the locking pins and snap rings on pins A and B.
7. Install O-rings to the specified positions.
8. Apply grease to each pin.
9. Start the engine and run at slow idle. Slowly operate the bucket in both directions to check for any interference in bucket movement.

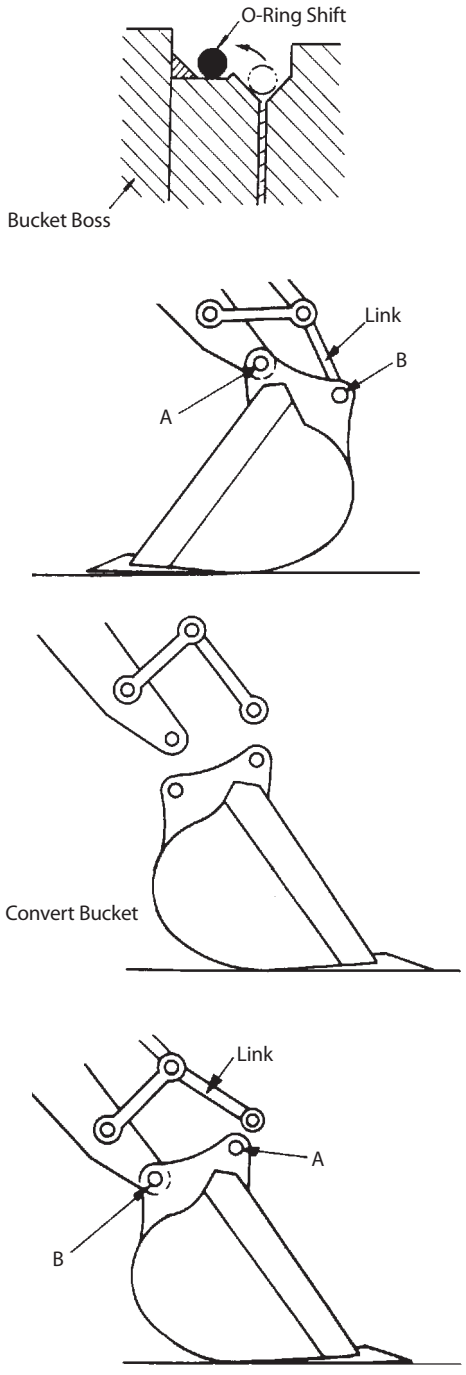

M104-07-064

4 Adjust Bucket Linkage

The machine is provided with a bucket adjustment system to take up play in the linkage. When play in the linkage increases, remove and install shims as follows:

1. Place the bucket in a stable position.
2. Run the engine at slow idle. With the bucket on the ground, slowly swing counterclockwise slightly until the top of the left bucket boss contacts the arm.
3. Stop the engine. Pull the pilot control shut-off lever to the LOCK position.
4. Slightly loosen three bolts (1) using a 8 mm wrench. Remove all shims (2) from clearance (c) between plate (3) and bucket. As shim (2) is a dual partitioning type, it can be easily removed by slightly loosening bolt (1) and inserting tip of a screw driver into the contact surface of left and right shims (2).
5. Push and hold bolts (1) to remove all clearance (a) between arm and boss (4). Holding boss (4) against arm increases clearance (b). Install as many shims (2) into clearance (b) as possible.
6. Install remaining shims (2) into clearance (c) and tighten bolts (1) to 50 N·m (5 kgf·m).

NOTE: The total number of shims (2) used in clearance (b) and (c) are 6×2=12. Remaining shims (2) must be installed in clearance (c) to prevent arm end face or bolt damage. Replace boss (4) with new one if measurement (d) is 5 mm (0.2 in) or less.

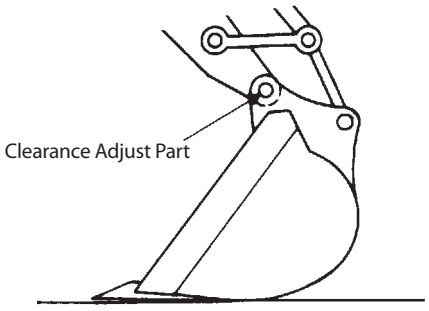

M503-07-056

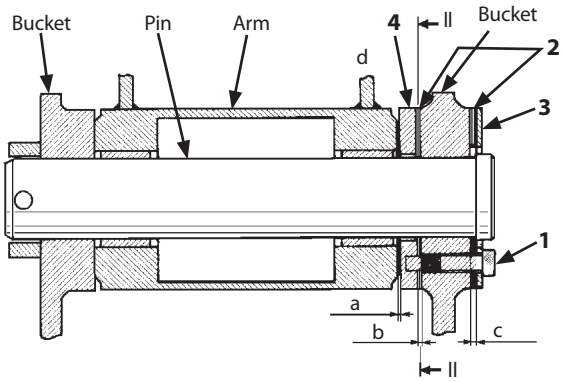

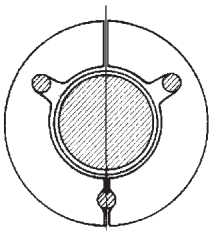

Section A

MDED-07-041

5 Remove Travel Levers

The travel levers may be removed if desired.

Procedure:

Remove bolts (1) and (2) to remove travel levers (3) and (4) from brackets.

NOTE: Wrench size: 17 mm

Tightening Torque: 50 N·m (5 kgf·m)

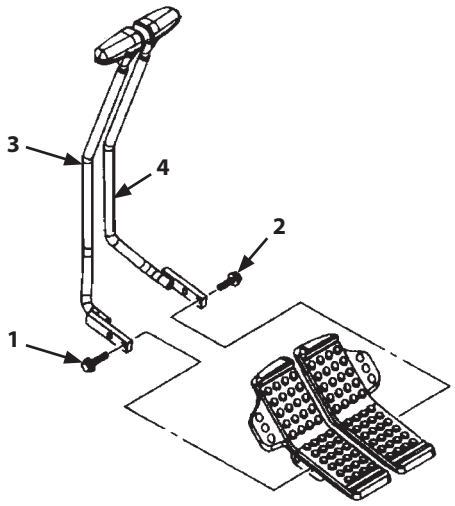

M178-07-077

6 Check and Replace Seat Belt

Check --- daily

Replace --- every 3 years

Prior to operating the machine, thoroughly examine belt (5), buckle (6) and attaching hardware (7). If any item is damaged or materially worn, replace the seat belt or component before operating the machine.
We recommend that the seat belt be replaced every three years regardless of its apparent condition.

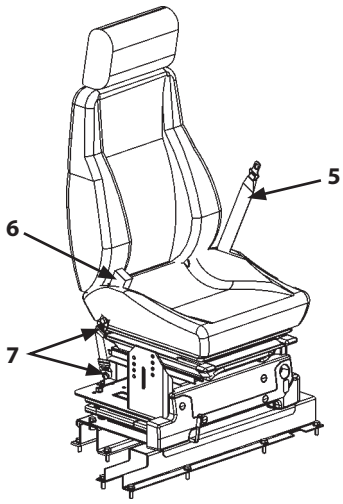

M1U1-07-008

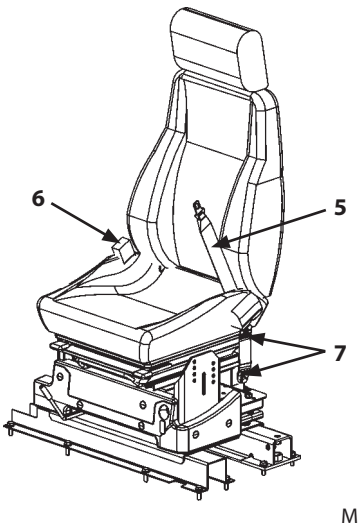

M1U1-07-009

7 Check Windshield Fluid Level

Check fluid in windshield washer tank (1). If the fluid level is low, remove cap (2) and add fluid via the opening.
During winter season, use all season windshield washer which will not freeze.

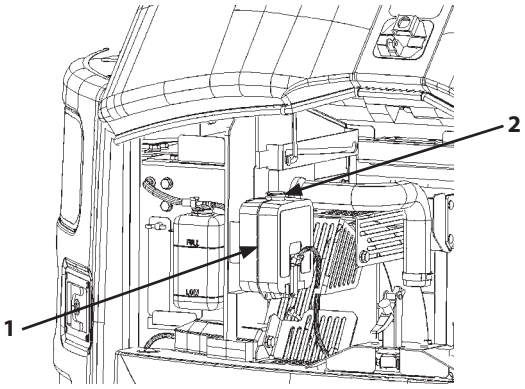

MDED-07-003

8 Check Track Sag
--- every 50 hours

Swing the upperstructure 90° and lower the bucket to raise the track off the ground as shown. Measure distance (A) at the middle of the track frame from the bottom of the track frame to the back face of the track shoe.
Each time, be sure to place blocks under the machine frame to support the machine.

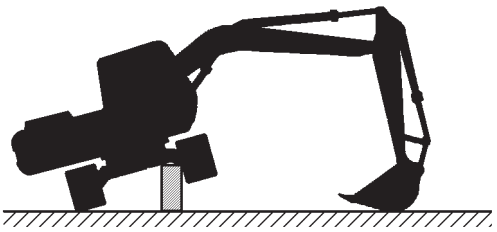

M104-07-067

CAUTION: To prevent accidents, care should be taken to ensure that hands, feet, and any body parts do not become entangled when working around the tracks.

	Appropriate sag
A mm (in)	210 to 245 (8.3 to 9.0)

NOTE: Check track sag after thoroughly removing soil stuck on the track area by washing.

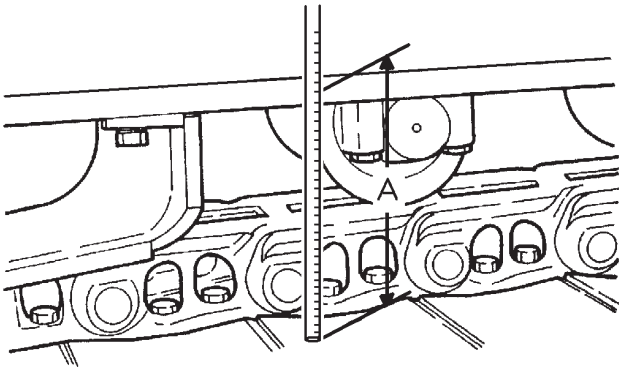

M107-07-068

Adjust Track Sag

1. If track sag is not within specifications, loosen or tighten the track following the procedures shown on the next page.
2. When adjusting track sag, lower the bucket to the ground to raise one track off the ground. Repeat this procedure to raise the other track. Each time, be sure to place blocks under the machine frame to support the machine. To prevent accidents, care should be taken to ensure that hands, feet, and any body parts do not become entangled when working around the tracks.
3. After adjusting both side track sags, rotate the tracks backward and forward to equalize both side track sags.
4. Recheck the track sag once more. Readjust as necessary.

Loosen the Track

CAUTION: The pressure inside the cylinder of the track adjuster is high. Do not loosen valve (1) quickly or loosen it too much as valve (1) may fly out or high-pressure grease in the adjusting cylinder may spout out. Slowly loosen valve (1) while keeping body parts and face away from valve (1). Never loosen grease fitting (2).

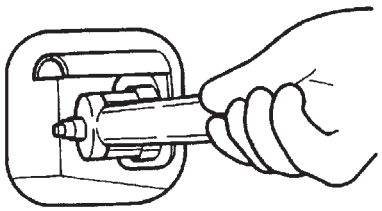

M107-07-075

IMPORTANT: When gravel or mud is packed between sprockets and track links, remove it before loosening.

1. To loosen the track, slowly turn valve (1) counterclockwise using long socket 19; grease will escape from the grease outlet.
2. Between 1 to 1.5 turns of valve (1) is sufficient to loosen the track.
3. If grease does not drain smoothly, slowly rotate the raised track.

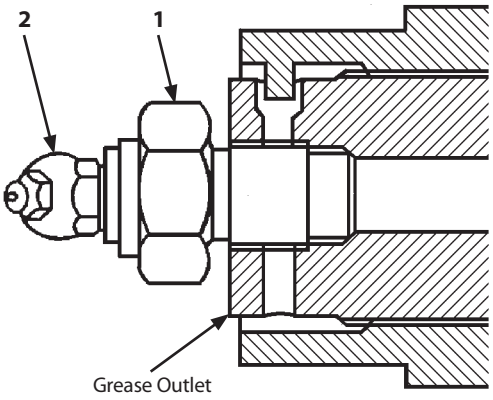

M104-07-119

CAUTION: To prevent accidents, care should be taken to ensure that hands, feet, and any body parts do not become entangled when working around the tracks.

4. When proper track sag is obtained, turn valve (1) clockwise to the original condition.

   Tightening Torque: 150 N·m (15 kgf·m, 108 lbf·ft)

CAUTION: Consult your authorized dealer if grease is not sufficiently drained.

Tighten the Track

CAUTION: It is abnormal if the track can not be adjusted. The strong force acts on the spring in track adjuster. Therefore, the grease in cylinder is highly pressurized. In such cases, NEVER ATTEMPT TO DISASSEMBLE the track or track adjuster, because of dangerous high-pressure grease inside the track adjuster. See your authorized dealer immediately.

To tighten the track, connect a grease gun to grease fitting (2) and add grease until the sag is within specifications.

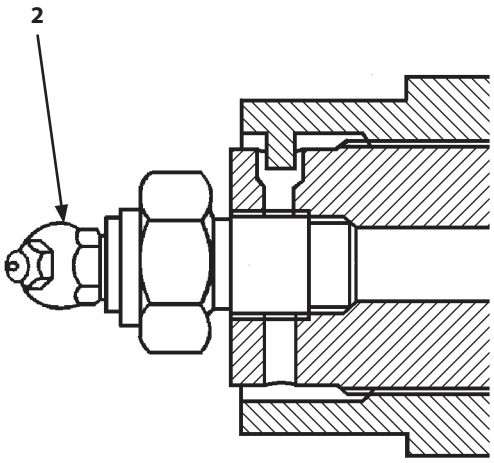

M104-07-119

9 Clean and Replace Air Conditioner Filter

Clean Circulating/Fresh Air Filters
Circulating Air Filter --- every 500 hours
Fresh Air Filter --- every 500 hours

Replace Circulating/Fresh Air Filters
Circulating Air Filter --- After cleaning 6 times or so
Fresh Air Filter --- After cleaning 6 times or so

Fresh Air Filter Removal

1. From the cab outside, pull the upper section of filter cover (1) located at the rear of the cab to remove the cover.
2. Pull the grip on fresh air filter (2) through the opening for filter cover (1) to remove fresh air filter (2).

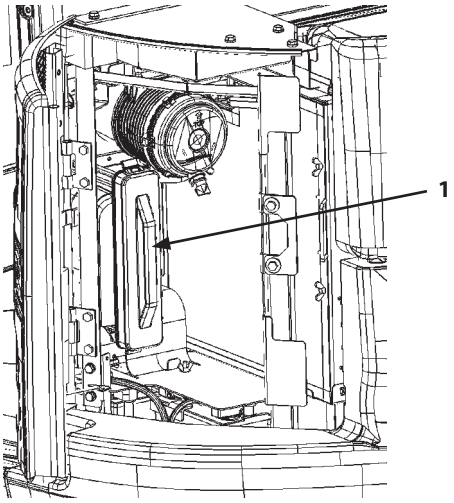

MDED-07-018

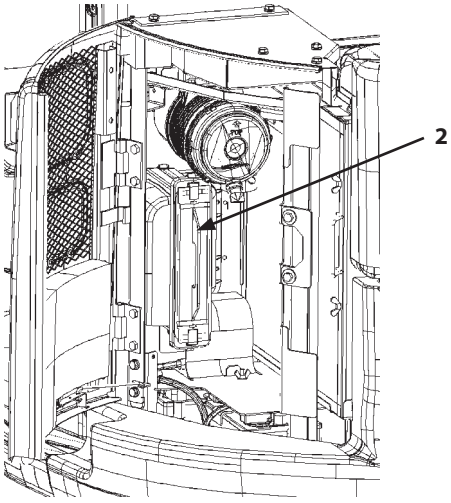

MDED-07-047

CAUTION: Use reduced compressed air pressure (less than 0.2 MPa, 2 kgf/cm^2) for cleaning purposes. Clear the area of bystanders, guard against flying chips, and wear personal protection equipment including eye protection.

Cleaning

Clean both the external and internal filters by blowing compressed air or washing with water.

When washing the filters with water, follow the procedures below:

1. Wash with tap water.
2. Soak the filters in neutral detergent-mixed water for approx. 5 minutes.
3. Wash the filters with water again.
4. Dry the filters.

Installation

When installing the cleaned circulation filter or new filters, follow the reverse order of the Removing Filter procedures described on the front page.

Fresh Air Filter (2)
Set fresh air filter (2) so that the arrow faces toward the cab right side. After setting, install the filter cover so that it aligns with the duct.

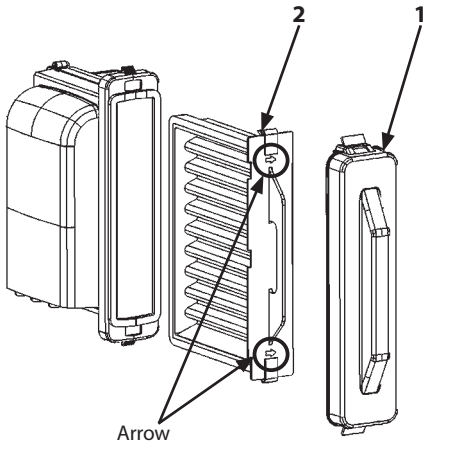

MDED-07-048

Circulating Air Filter

ZX75US-5A

Removal Circulating Air Filter (Outside)

1. Circulating air filter is located beside the seat stand.
2. Remove screws (1). Remove cover (2) by pulling it to the cab front.
3. Remove screw (3).
4. Remove circulating air filter (outside) (4).

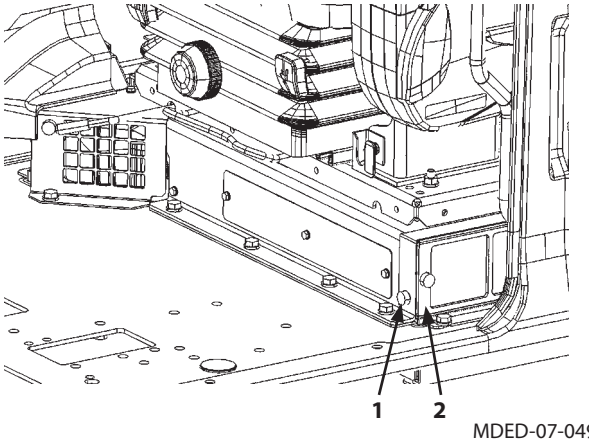

MDED-07-049

Circulating Air Filter (Inside)

1. Remove circulating air filter (inside) (5) by holding grip (6).

⚠ WARNING: When using compressed air pressure, wear safety glasses or goggles.

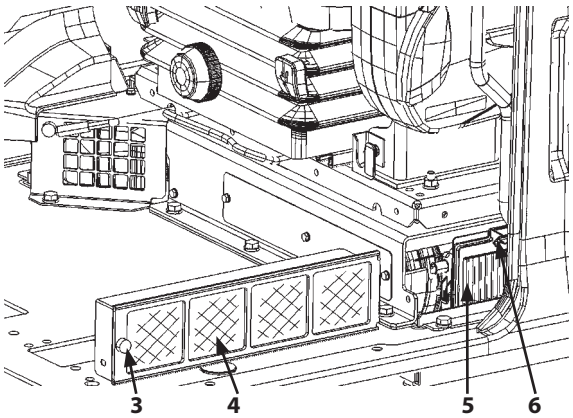

MDED-07-050

Cleaning

Clean the circulating and fresh air filters.
Clean both the outside and inside filters by blowing compressed air or washing with water.

Washing procedure with water is as follows:
1. Use tap water.
2. Submerge the filter in water containing a neutral detergent for about 5 minutes.
3. Clean the filter with water again.
4. Dry the filters.

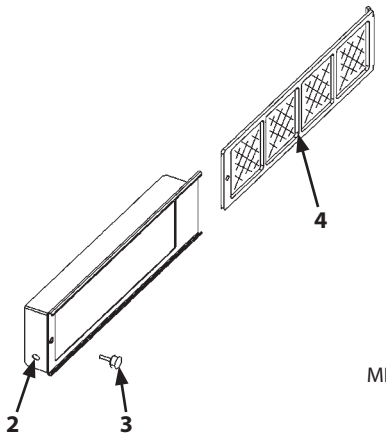

MDED-07-051

Installation

- Circulating Air Filter (Outside)

1. Install circulating air filter (outside) (4) to cover (2) and secure it with screw (3).
2. Install cover (2) and secure it with screw (1).

- Circulating Air Filter (Inside)

1. Install filter (6) the groove (front section in two pieces) into the groove.

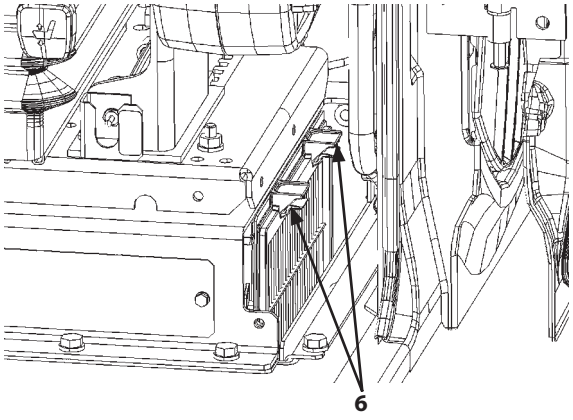

MDED-07-052

ZX85USB-5A

Removal Circulating Air Filter

1. Circulating air filter is located beside the seat stand.
2. Remove screws (1) (3 used). Remove, cover (2) by pulling it toward the cab front.
3. Remove circulating air filter (3) by holding grip (4) and pulling it toward you through the opening for cover.

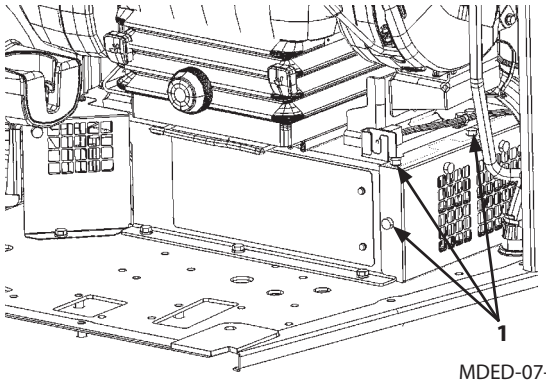

MDED-07-053

Cleaning

CAUTION: Use reduced compressed air pressure (less than 0.2 MPa, 2 kgf/cm²) for cleaning purposes. Clear the area of bystanders, guard against flying chips, and wear personal protection equipment including eye protection.

Clean both the external and internal filters by blowing compressed air or washing with water.

When washing the filters with water, follow the procedures below:

1. Wash with tap water.
2. Soak the filters in neutral detergent-mixed water for approx. 5 minutes.
3. Wash the filters with water again.
4. Dry the filters.

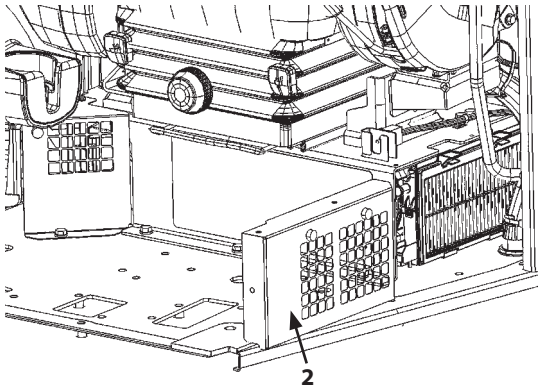

MDED-07-054

Installation

- Circulating Air Filter (4)

1. Install filter (3) into the groove.
2. Install cover (2) and secure it with screws (1) (3 used).

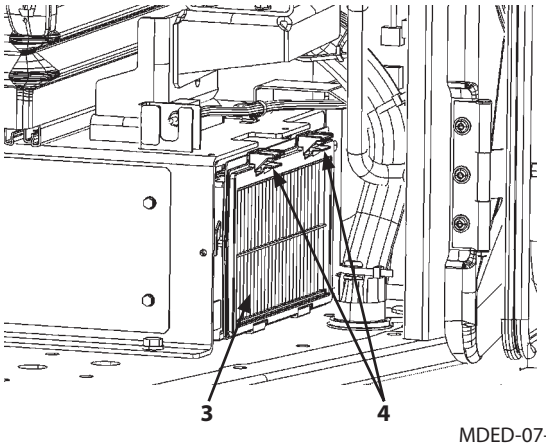

MDED-07-055

10 Check Air Conditioner --- every 250 hours

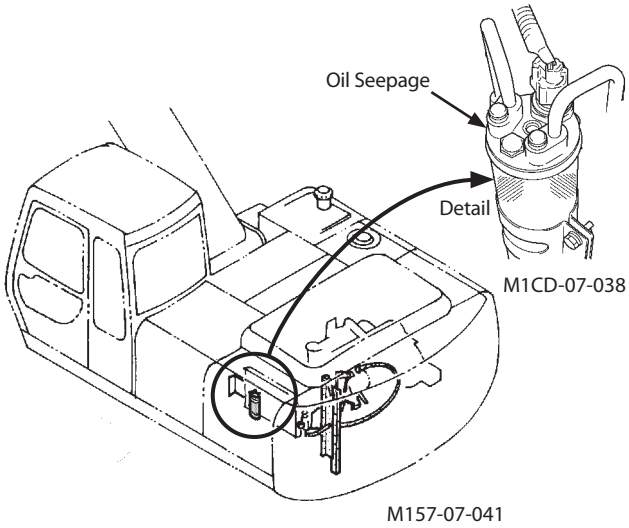

Check pipe connections for refrigerant gas leakage

If oil seepage is found around pipe connections, it indicates possible gas leakage.

Check Refrigerant

Start the engine and run at approximately 1500 min^{-1} (rpm). Turn the air conditioner switch to ON. Set the blower switch to HI and set the temperature control switch to the coolest position (18 °C on the monitor screen). Operate the air conditioner 2 to 3 minutes. Check if cool air comes out from the vent in the cab.

Kind of refrigerant and amount when shipping the machine

Type	Amount
HFC134a	0.80±0.05 kg

IMPORTANT: Do not dispose FREON into the atmosphere to prevent depletion of ozone layer and global warming.

Check the condenser

If the condenser fins become clogged with dirt or insects, the cooling effect will be decreased.
Be sure to keep it clean at all times. (Refer to "Clean Radiator Core" in Maintenance Section.)

Check compressor

After operating the air conditioner for 5 to 10 minutes, touch both the high pressure pipe and the low pressure pipe.
If normal, the high-pressure side pipe will be hot, and the low-pressure side cold.

Check mounting bolts for looseness

Confirm that the compressor mounting bolts and other mounting/fastening bolts are securely tightened.

Inspect belt, check and adjust tension

--- every 250 hours

Visually check the compressor and fan belts for wear.
Check fan belt tension by depressing the midpoint between compressor pulley (2) and tension pulley (1) with the thumb. Deflection must be shown in the right figure with a depressing force of approximately 98 N (10 kgf).
If cool air does not come out, or any other abnormalities are found in air conditioner system, see your authorized dealer for inspection.

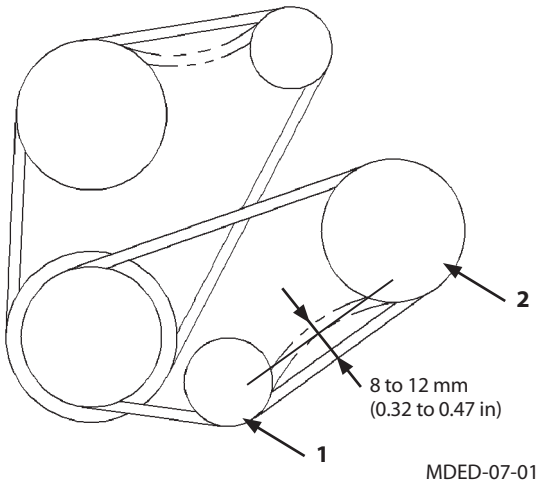

MDED-07-015

Adjust Compressor Belt Tension

1. Loosen lock bolt (4) of tension pulley (1).
2. Move compressor pulley (2) by adjusting bolt (3) under tension pulley (1) until tension is correct.
3. Securely tighten (4) of tension pulley (1).

IMPORTANT: When a new belt is installed, be sure to re-adjust the tension after operating the engine for 3 to 5 minutes at slow idle speed to be sure that the new belt is seated correctly.

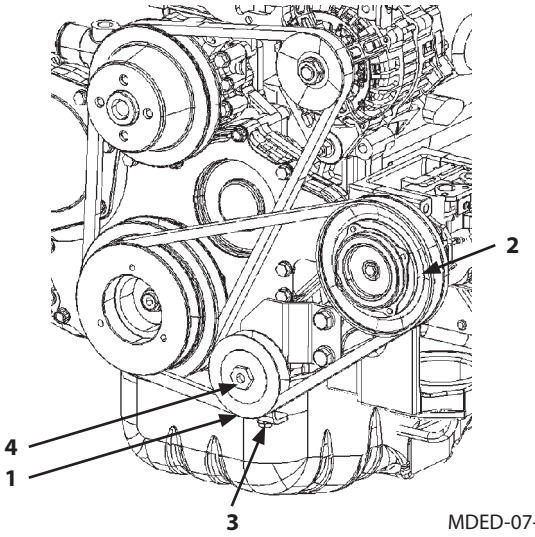

MDED-07-025

11 **Clean Cab Floor**

--- as required

IMPORTANT: When cleaning the cab floor with tap water, spray the floor only. Take care not to splash the surrounding area. Do not increase water spray speed by restricting the hose end, and do not use high pressure steam for cleaning. Be sure to completely remove any moisture from the surrounding area.

1. Park the machine on solid and level surface. Lower the bucket to the ground. Before cleaning, stop the engine.

   Protect the air conditioner in-cab air suction port (2) and foot air vent (1) with covers (4, 6, 9 and 11).

ZX75US-5A

2. Remove screw (7) and the circulating air filter (outside) from cover (5). Install cover (6) with screw (7) in the position where the circulating air filter (outside) is installed. Remove foot air vent holding screws (3). Attach cover (4) onto the foot air vent and secure it with screws (3).

ZX85USB-5A

2. Remove screws (12). Install covers (11) with screws (12). Remove floor air vent holding screw (8). Attach cover (9) onto the floor air vent and secure it with screw (8).

IMPORTANT: Never fail to do this preparation work. Failure to do so may result in damage/failure of the air conditioner.

3. Sweep the cab floor clean using a brush, and brush dust from the cab floor while spraying water.
4. When cleaning the floor mat, sweep dust (water) along the grooves on the floor mat.
5. When cleaning after removing the floor mat, sweep dust (water) through two cleaning holes.
6. After cleaning, remove covers (4), (6), (9) and (11) from the air conditioner in-cab suction hole and the foot air vent while following the above steps in reverse. Install the circulating air filter. (Refer to the descriptions for Clean and Replace Circulating Air Filter and Fresh Air Filter.) Store covers (4), (6), (9) and (11).

IMPORTANT: If the A/C is operated without removing the cover, the A/C will not operate efficiently so that its cooling ability is reduced.

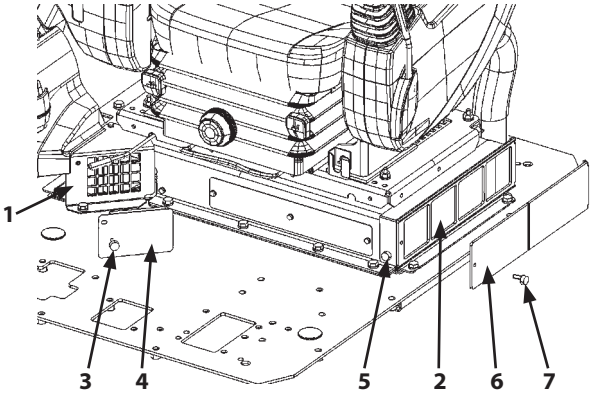

ZX75US-5A

MDED-07-056

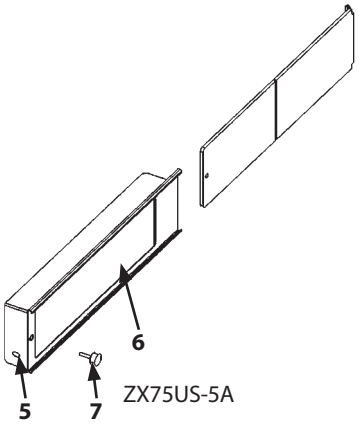

ZX75US-5A

MDED-07-057

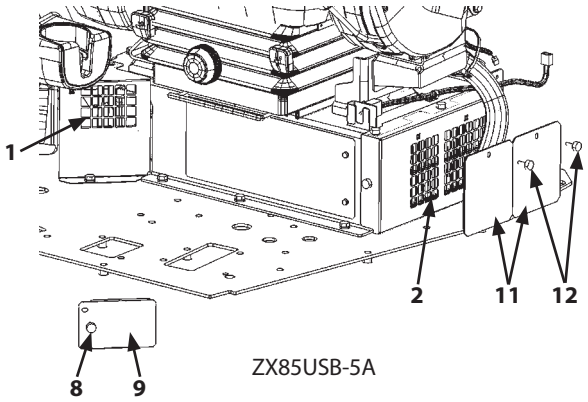

ZX85USB-5A

MDED-07-058

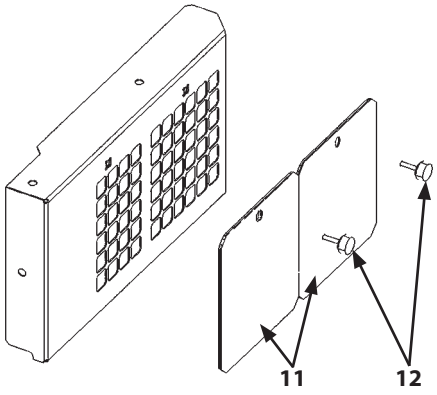

ZX85USB-5A

MDED-07-059

12 **Check/Clean/Function Check Injection Nozzle**
--- every 1500 hours

13 **Retighten Cylinder Head Bolt**
--- as required

See your authorized dealer.

14 **Inspect and Adjust Valve Clearance**
--- every 1000 hours

See your authorized dealer.

15 **Check Fuel Injection Timing**
--- every 1500 hours

See your authorized dealer.

16 **Measure Engine Compression Pressure**
--- as required

See your authorized dealer.

17 **Check Starter and Alternator**
--- every 1000 hours

See your authorized dealer.

18 **Check Crankcase Breather**
--- every 1500 hours

See your authorized dealer.

19 Check Gas Damper

--- as required

CAUTION: The gas damper has been charged with high-pressure nitrogen gas. Inappropriate handling may cause explosion, possibly resulting in serious injury or death.

The gas dampers are used in the engine cover and the cab overhead window. Contact your nearest HITACHI dealer immediately at any of the following situations.

- The cover or window can not be opened with normal operating force.
- The cover or window can not maintain its open position.
- Oil or gas leak is found.

20 Tightening and Retightening Torque of Nuts and Bolts

--- every 250 hours (first time after 50 hours)

Tighten or retighten nuts and bolts used on this machine in accordance with the torque values shown in the following table. Bolts and nuts should be replaced with those of the same or higher grade.
Check tightness after the first 50 hours then every 250 hours. For tightening nuts and bolts other than specified in the table below, refer to the Tightening Torque Chart at the end of this section.

No.	Descriptions		Bolt Dia	Quantity	Wrench size	Torque		
						N·m	(kgf·m)	(lbf·ft)
1.	Engine cushion rubber mounting bolt		14	2	22	180	(18)	(133)
			16	2	24	270	(27)	(200)
2.	Engine bracket mounting bolt		10	8	17	50	(5)	(37)
			12	8	19	90	(9)	(66)
3.	Hydraulic oil tank mounting bolt		16	4	24	270	(27)	(200)
4.	Fuel tank mounting bolt		16	4	24	210	(21)	(155)
5.	ORS fittings for hydraulic hoses and piping		–	–	17	25	(2.5)	(19)
			–	–	19	30	(3)	(22)
			–	–	22	40	(4)	(30)
			–	–	27	95	(9.5)	(70)
			–	–	32	140	(14)	(103)
			–	–	36	180	(18)	(133)
			–	–	41	210	(21)	(155)
6.	Pump mounting bolt		18	2	27	300	(30)	(220)
7.	Control valve mounting bolt		14	3	22	180	(18)	(133)
8.	Control valve bracket mounting bolt		14	4	22	140	(14)	(103)
9.	Swing device mounting bolt		16	10	24	210	(21)	(155)
10.	Swing motor mounting bolt (Hexagon wrench)		14	8	12	175	(17.5)	(129)
11.	Battery mounting nut		10	4	17	20	(2.0)	(15.0)
12.	Cab mounting nut		16	4	24	210	(21)	(155)
13.	Swing bearing mounting bolt	(Upperstructure)	16	24	24	210	(21)	(155)
		(Undercarriage)	16	24	24	270	(27)	(200)
14.	Travel device mounting bolt		16	20	24	300	(30)	(220)
	Travel reduction device cover mounting bolt		14	8	22	140	(14)	(103)
15.	Sprocket mounting bolt		16	24	24	270	(27)	(200)
16.	Upper roller mounting bolt		14	2	22	140	(14)	(103)
17.	Lower roller mounting bolt		14	40	22	245	(24.5)	(180)
18.	Track shoe mounting bolt		14	320	22	245	(24.5)	(180)
19.	Cover mounting bolt		6	–	10	10	(1)	(7.4)
			8	–	13	10	(1)	(7.4)
			10	–	17	50	(5)	(37)
20.	Flexible master coupling of low pressure piping		8	2 sets	13	10.3~12.4	(1.05~1.26)	(7.6 to 9.1)
21	Jubilee clamp	Low pressure piping	–	4	7	4.5	(0.45)	(3.3)
		In-take air duct	–	7	7	(6.0)	(0.60)	(4.3)
		Radiator hose (Engine)	–	1	7	(4.5)	(0.45)	(3.3)
		Radiator hose (Radiator)	–	2	7	(5.9)	(0.59)	(4.3)
	T-bolt clamp	Suction hose	–	2	11	(10.0)	(1.0)	(7.4)
		low pressure piping	–	4	9.5	(7.4)	(0.74)	(5.4)
		Radiator hose	–	1	9.5	(7.4)	(0.74)	(5.4)
22.	Side-cutter mounting bolt		20	6	30	540	(54)	(400)

Tightening Torque Chart

Bolt Dia. mm	Hexagon Wrench						Wrench size mm	Socket Bolt		Wrench size mm
	10.9 Ⓣ T		8.8 Ⓗ H		7 M			Socket Bolt		
	N·m(kgf·m)		N·m(kgf·m)		N·m(kgf·m)			N·m	(kgf·m)	
6					3.3 to 4.2 (0.3 to 0.4)		10			5
8	30	(3.0)	20	(2.0)	10	(1.0)	13	20	(2.0)	6
10	65	(6.5)	50	(5.0)	20	(2.0)	17	50	(5.0)	8
12	110	(11)	90	(9)	35	(3.5)	19	90	(9)	10
14	180	(18)	140	(14)	55	(5.5)	22	140	(14)	12
16	270	(27)	210	(21)	80	(8.0)	24	210	(21)	14
18	400	(40)	300	(30)	120	(12)	27	300	(30)	14
20	550	(55)	400	(40)	170	(17)	30	400	(40)	17
22	750	(75)	550	(55)	220	(22)	32			
24	950	(95)	700	(70)	280	(28)	36			
27	1400	(140)	1050	(105)	400	(40)	41			
30	1950	(195)	1450	(145)	550	(55)	46			
33	2600	(260)	1950	(195)	750	(75)	50			
36	3200	(320)	2450	(245)	950	(95)	55			

⚠ CAUTION: If fixing bolts for counterweight are loosened, consult your nearest authorized dealer.

IMPORTANT:

- **Apply lubricant (e. g. white zinc B solved into spindle oil) to bolts and nuts to stabilize their friction coefficient.**
- **Remove soil, dust, and/or dirt from the nut and bolt thread surfaces before tightening.**
- **Tighten nuts and bolts to specifications. If tightened with excessively low or high torque, missing or breakage of nuts and/or bolts may result.**

1. Retighten the engine insulation rubber mounting bolts.

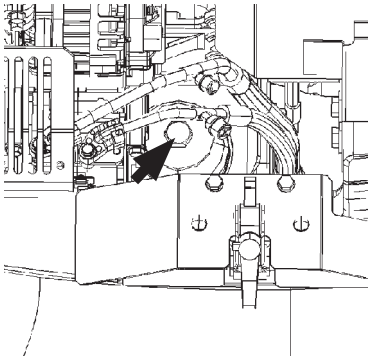

MDED-07-042

2. Retighten the engine bracket mounting bolts.

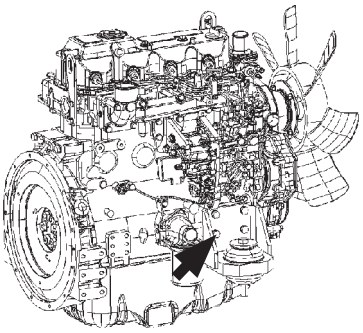

MDED-07-044

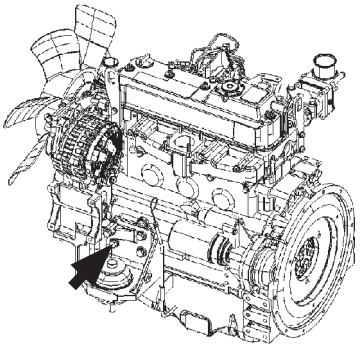

MDED-07-043

3. Retighten the hydraulic oil tank mounting bolts.

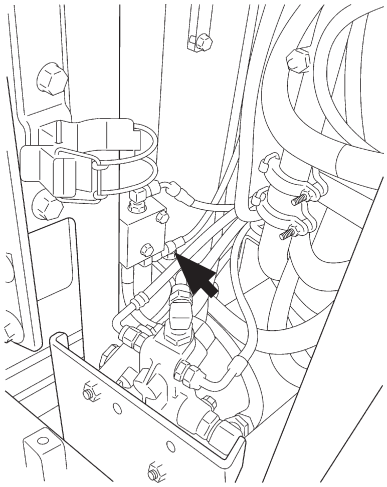

MDED-07-045

4. Retighten the fuel tank mounting bolts.

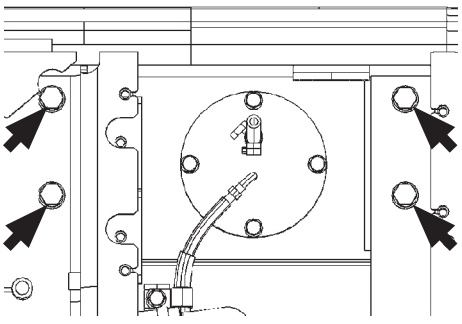

MDED-07-030

5. Retighten the ORS fittings for hydraulic hoses and piping.

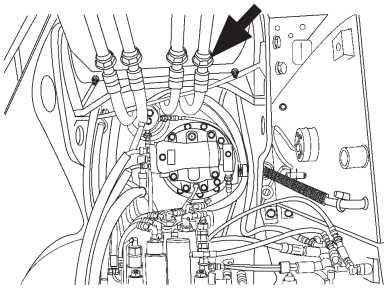

M1CD-07-004

6. Retighten the pump mounting bolts.

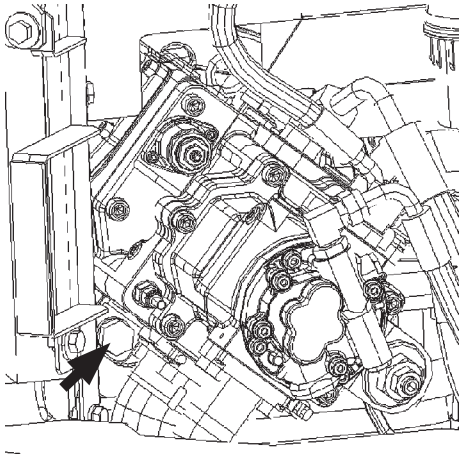

MDED-07-031

7. Retighten the control valve mounting bolts.

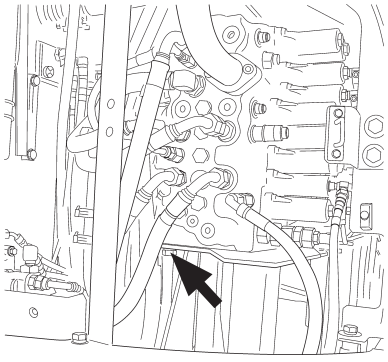

M1CG-07-026

8. Retighten the control valve bracket mounting bolts.

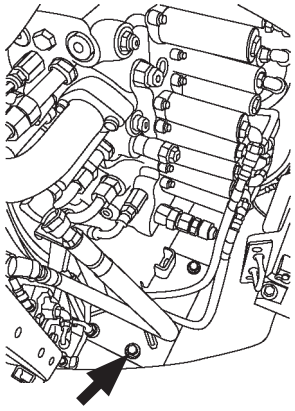

M1P1-07-056

9. Retighten the swing device mounting bolts.

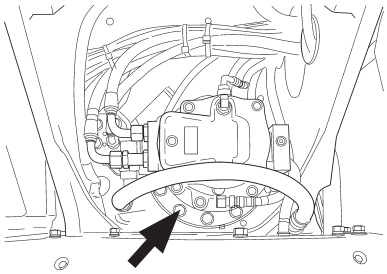

M1CG-07-029

10. Retighten the swing motor mounting bolts.

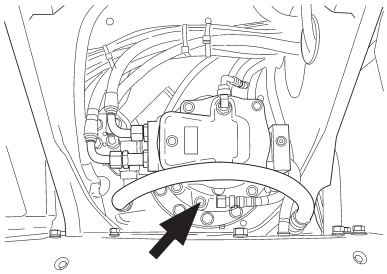

M1CG-07-029

11. Retighten the battery mounting nuts.

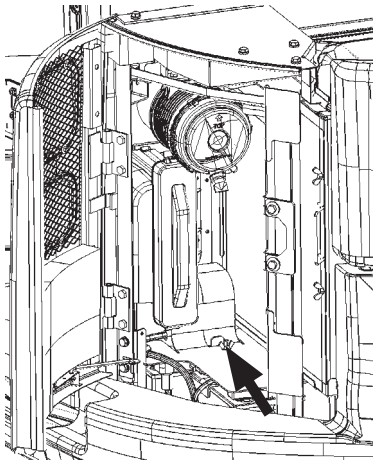

MDED-07-011

12. Retighten the cab mounting nuts.

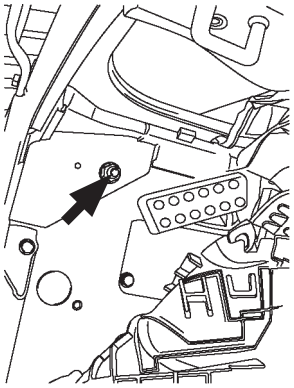

M1U1-07-026

ZX75US-5A

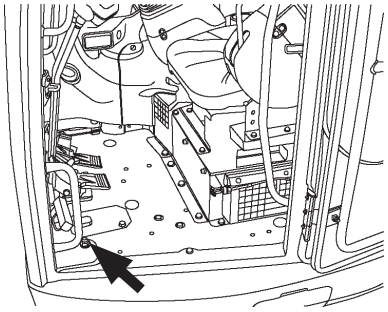

M1P1-07-022

ZX85USB-5A

13. Retighten the swing bearing mounting bolts to the upperstructure.

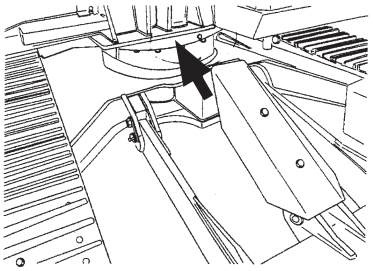

M1CD-07-007

Retighten the swing bearing mounting bolts to the undercarriage.

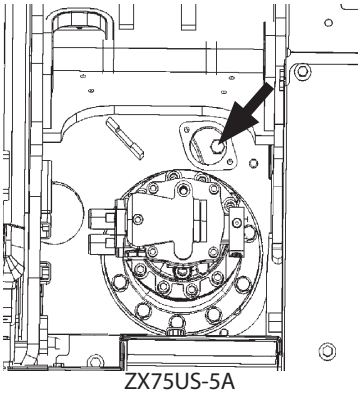

ZX75US-5A

MDEC-07-013

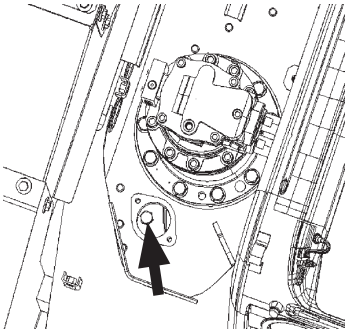

ZX85USB-5A

MDEC-07-014

14. Retighten the travel device mounting bolts.

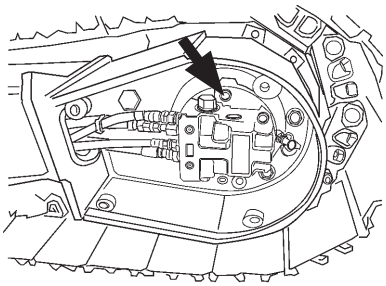

M1CD-01-005

15. Retighten the sprocket mounting bolts.

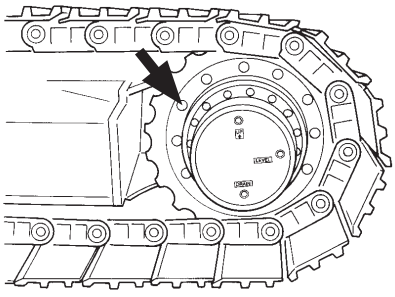

M1CC-07-019

16. Retighten the upper roller mounting bolts.

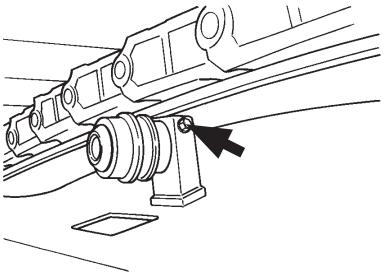

M152-07-046

17. Retighten the lower roller mounting bolts.

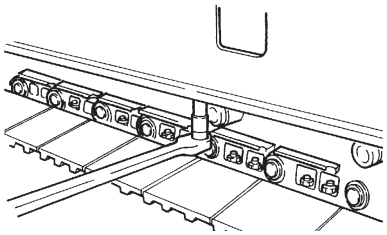

M104-07-090

18. Retighten the shoe mounting bolts.

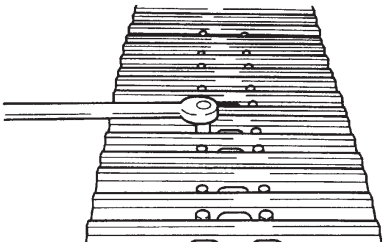

M104-07-091

19. Retighten the cover mounting bolts.

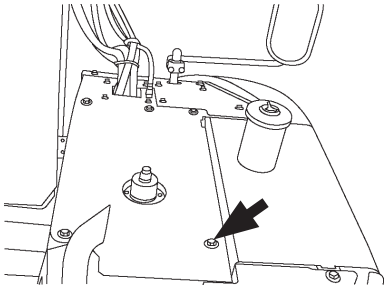

M1P1-07-010

20. Retighten flexible master coupling

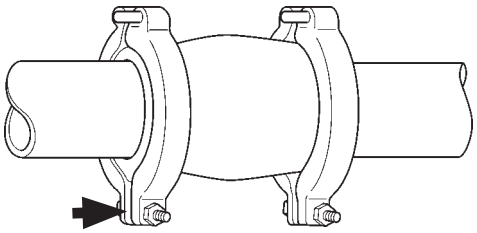

Flexible Master Coupling M1G6-07-008

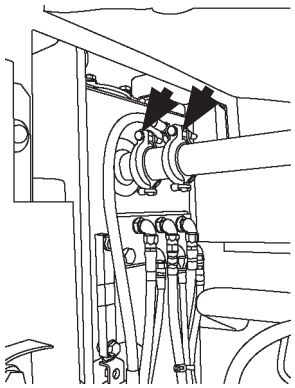

M1P1-07-051

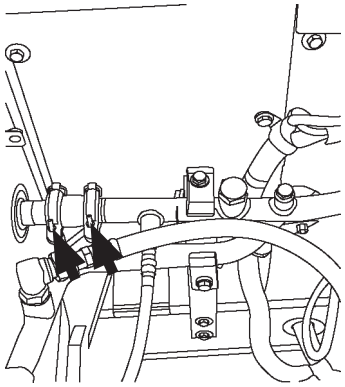

M1P1-07-052

21. Retighten coupling and T-bolt clamp

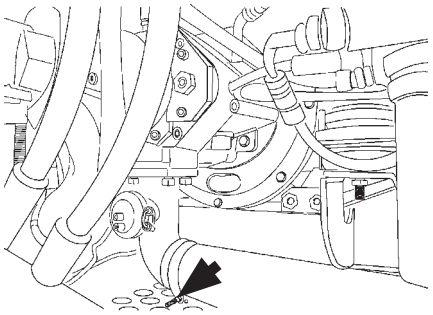

MDED-07-046

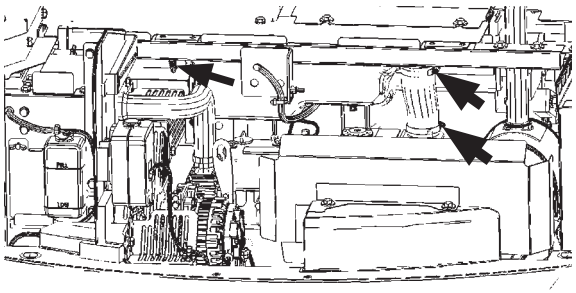

MDED-07-065

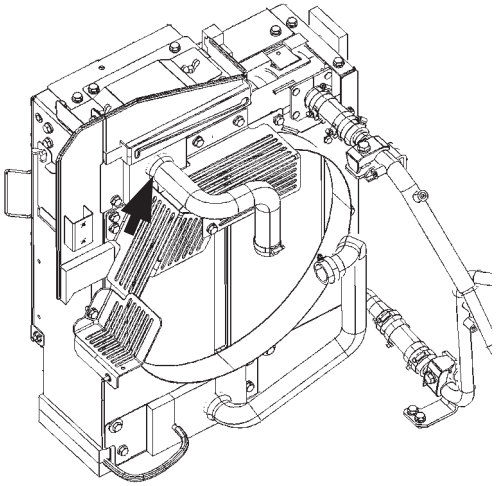

MDED-07-008

22. Retighten side-cutter mounting bolt

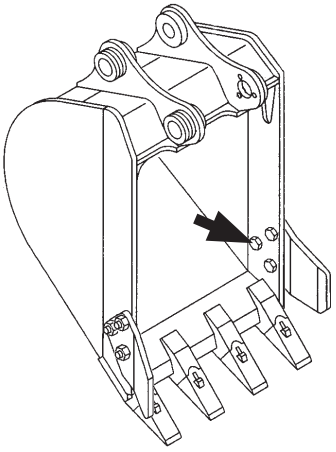

M196-09-024

MEMO

Maintenance Under Special Environmental Conditions

Operating Conditions	Precautions for Maintenance	
Muddy Soil, Rainy or Snowy Weather	After Operation	: Clean the machine and check for cracks, damaged, loose or missing bolts and nuts. Lubricate all necessary parts without delay.
Near the Ocean	After Operation	: The following salt pollution measures must be taken when the machine is operated at sea or at coastline. (1) After completing the work, extend/retract the hydraulic cylinders several times to form oil film on the rod surface. Store the machine with cylinders retracted as much as possible. (2) Thoroughly clean the machine with fresh water to wash off salt. (3) Perform touch up painting periodically on hose fittings, lubrication piping and inserting position of cover, where sea water is easily collected, in order to prevent corrosion. (4) During storage of the machine, cover the machine by tarps to prevent sea water from entering into the cab vent. Apply rust prevention oil (example: ANTIRUST P-1300NP-3 JX Nippon Oil & Energy Corporation) onto plated part of the cylinder rods.
Dusty Atmosphere	Air Cleaner	: Clean the element regularly at shorter service intervals.
	Radiator	: Clean the oil cooler screen to prevent clogging of the radiator core.
	Fuel System	: Clean the filter element and strainer regularly at shorter service intervals.
	Engine, Muffler	: Clean earlier than the normal interval to prevent dust from sticking and accumulating.
Rocky Ground	Tracks	: Carefully operate while checking for cracks, damage and loose bolts and nuts. Loosen the tracks a little more than usual.
	Front Attachment	: Standard attachment may be damaged when digging rocky ground. Reinforce the bucket before using it, or use a heavy duty bucket.
Falling Stones	Cab Head Guard	: Provide a cab guard to protect the machine from falling stones. Consult your nearest Hitachi dealer.
Freezing Weather	Fuel/Lubricant	: Use high quality and low viscosity fuel and oil.
	Engine Coolant	: Be sure to use antifreeze.
	Battery	: Fully charge the batteries at shorter intervals. If not fully charged, electrolyte may freeze.
	Track	: Keep the track clean. Park the machine on a hard surface to prevent the tracks from freezing to the ground.

MEMO

STORAGE

Storing the Machine

In case the machine is to be stored for longer than one month, pay attention to the following points to prepare next operation.

Precautions for Long-Term Storage

Item	Remedy
Machine Cleaning	Wash the machine. Remove soil or other debris adhered to the machine.
Lubrication/Greasing	Check lubricant's level and contamination. Fill up or change if necessary. Lubricate all grease points. Coat grease to exposed metal surfaces which are subject to rust. (i.e. cylinder rods etc.)
Battery	Remove the batteries and store them in a dry protected place after charging fully. If not removed, disconnect the negative battery cable from the (–) terminal.
Coolant	Add anti-rusting agent. If storing in extremely cold areas, either add extra anti-freeze or drain coolant completely to avoid freezing. In this case, place a sign reading "NO COOLANT".
Protection Against Dust and Moisture	Store the machine in a dry storage area using a protective cover.
Tools	Inspect and repair, then store.
Lubrication Operation	If oil film on the metal surfaces is lost, rust may begin, possibly causing abnormal wear of the machine when the machine operation is restarted. If the machine is stored for a long time, operate hydraulic functions for travel, swing and digging two to three times for lubrication, at least once a month. Be sure to check the coolant level and lubrication conditions before operating.

NOTE:

- *Lubricating operation is a series of warm-up, travel, swing and digging operation carried out repeatedly for a few cycles at slow speed.*
- *Lubricants will deteriorate during long term storage of the machine. Be sure to carefully check the lubricants before restarting operation of the machine.*

Precautions for Disconnecting or Connecting Batteries

In case the batteries are kept disconnected for more than one month or when the batteries are reconnected, contact your nearest Hitachi dealer. Resetting of the Information Controller may be required.

MEMO

Troubleshooting

If any machine trouble has occurred, immediately repair it. Make certain the cause of the trouble and take necessary measures to prevent the reoccurrence of the same trouble.
In case troubleshooting is difficult, or measures marked with * must be taken, consult the nearest Hitachi dealer. Never attempt to adjust, disassemble, or repair the hydraulic and/or electrical/electronic parts/components.
IMPORTANT: Never attempt to disassemble or modify the electrical/electronic components.

Engine

Consult the nearest Hitachi dealer for the engine troubleshooting.

Engine Auxiliaries

Problem	Cause	Solution
Batteries will not be charged.	Broken battery separator	Replace
	Faulty regulator	* Adjust and replace
	Faulty ground line	* Repair
	Faulty alternator	* Repair or replace
Batteries discharge quickly after being charged.	Shorted cable	* Repair or replace
	Shorted battery separator	* Repair or replace
	Increased sediment in battery	* Replace
Coolant temperature is too high.	Low coolant level	Refill
	Insufficient fan belt tension	Adjust
	Damaged rubber hose	* Replace
	Faulty thermostat	* Replace
	Faulty coolant temperature gauge	* Replace

Items with * mark: Consult your nearest Hitachi dealer.

Impossible to Start the Engine

Problem		Cause	Solution
Engine will not start	Starter does not rotate or is not powerful	Discharged battery	Charge or replace battery.
		Disconnected, loose, or corroded battery terminals	After repairing the corroded area, securely tighten the connectors.
		Lowered pilot control shut-off lever.	Pull pilot control shut-off lever up.
		Disconnected, loose, or corroded starter ground line terminals.	After repairing the corroded area, securely tighten the connectors.
		Faulty pilot control shut-off lever electrical system	Repair
		Too high engine oil viscosity	Change engine oil with appropriate viscosity.
		Faulty starter and/or electrical system	* Repair and replace
	Starter rotates	No fuel	After checking that no fuel is leaking, refill fuel.
		Air in the fuel system	Bleed air.
		Clogged fuel filter	After draining water, replace the element.
		Frozen fuel	Warm the fuel pump with hot water or wait until the atmospheric temperature rises.
		Engine stop switch is ON	* Repair and replace
		Faulty preheat system	* Repair and replace
Even though the engine is started, the engine stalls soon		Too low idle speed	* Repair and replace
		Clogged fuel filter	After draining water, replace the element.
		Faulty engine control system	* Repair and replace
		Clogged air cleaner	Clean or replace the element.
		Faulty injection pump	* Repair and replace
Engine runs irregularly		Faulty fuel system	* Repair and replace
		Water or air in the fuel system	Drain water or bleed air.
		Faulty engine control system	* Repair and replace

Items with * mark: Consult your nearest Hitachi dealer.

Control Lever

Problem	Cause	Solution
Lever is heavy to operate.	Rusted joint	* Lubricate or repair
	Worn pusher	* Replace
Does not move smoothly	Worn pusher	* Repair or replace
	Faulty pilot valve	* Replace
Does Not Return to Neutral	Faulty pilot valve	* Replace
The lever is tilted in the neutral position due to increase in play	Worn joint	* Repair or replace
	Faulty pilot valve	* Replace

Items with * mark: Consult your nearest Hitachi dealer.

Hydraulic System

When the machine is stored without operation, air mixed in hydraulic oil will become separated and will accumulate in the cylinder upper sections, causing a delay in the response time of the machine movement or weak power development.
In case these symptoms appear, repeatedly operate all actuators several times.

Problem	Cause	Solution
No hydraulic Functions (Noise from pumps)	Faulty hydraulic pump	* Repair or replace
	Lack of hydraulic oil	Refill
	Broken suction pipe and/or hose	* Repair or replace
No hydraulic Functions (Hydraulic pump noise remains unchanged.)	Faulty pilot pump	* Replace
	Faulty pilot shut-off solenoid valve	* Replace
	Faulty wire harness (pilot shut-off solenoid valve) pilot shut-off switch.	* Repair or replace
	The pilot control shut-off lever is in the LOCK position.	Turn the pilot shut-off lever to the UNLOCK position.
All actuators have no power.	Malfunction due to worn hydraulic pump	* Replace
	Decreased main relief valve set pressure in the control valve	* Adjust
	Lack of hydraulic oil	Refill
	Clogged suction strainer in the hydraulic oil tank	Clean
	Absorption of air from the oil suction side	Retighten
	Faulty pressure sensor.	* Replace
	Faulty solenoid valve	* Replace
Only one side lever is inoperable or has no power.	Faulty relief valve in the valve	* Repair or replace
	Broken pipe and/or hose	* Repair or replace
	Loose pipe line joint	Retighten
	Broken O-ring at pipe line joint	* Replace
	Faulty hydraulic pump	* Repair or replace
	Faulty pilot valve	* Replace
	Faulty pilot circuit line	* Repair or replace
	Faulty pilot solenoid valve	* Repair or replace

Items with * mark: Consult your nearest Hitachi dealer.

Problem	Cause	Solution
Only one actuator is inoperable.	Broken control valve spool	* Replace
	Embedded foreign matter in valve spool	* Repair or replace
	Broken pipe and/or hose	* Repair or replace
	Loose pipe line joint	Retighten
	Broken O-ring at pipe line joint	* Replace
	Broken actuator	* Repair or replace
	Faulty pilot valve	* Replace
	Faulty pilot circuit line	* Repair or replace
	Faulty pilot solenoid valve	* Repair or replace
Only one cylinder is inoperable or has no power.	Broken oil seal in cylinder	* Repair or replace
	Oil leak due to damage to cylinder rod	* Repair or replace
	Faulty pilot valve	* Replace
	Faulty pilot circuit line	* Repair or replace
	Faulty pilot solenoid valve	* Repair or replace
Hydraulic oil temperature increases.	Stained oil cooler	Clean
	Insufficient engine fan belt tension	Adjust
Oil leak from low pressure hose	Loose clamps	Retighten
	Faulty suction manifold	* Repair or replace

Items with * mark: Consult your nearest Hitachi dealer.

Drive Function

Problem	Cause	Solution
One or both side tracks are inoperable.	Damaged center joint	* Repair or replace
	Incompletely released parking brake	* Repair or replace
	Broken travel motor	* Repair or replace
	Faulty pilot valve	* Replace
	Faulty pilot circuit line	* Repair or replace
Does not travel smoothly.	Overly tensioned or slackened crawler sag	Adjust
	Lack of lubricant in front idler and/or roller	Refill
	Deformed track frame	* Repair or replace
	Embedded foreign matter such as rock fragments	Remove
	Dragged parking brake	* Repair
Travel speed does not change.	Faulty travel speed switch.	* Replace
	Faulty pressure sensor.	* Replace
	Pump 1 and 2 delivery pressure sensors	
	Pumps 1, 2 control pressure sensors	
	Poor contact in connector	* Repair or replace
	Damaged wire harness	* Repair
	Faulty controller (MC)	* Replace
	Faulty solenoid valve	* Repair or replace
	Faulty motor	* Repair or replace

Items with * mark: Consult your nearest Hitachi dealer.

Swing Function

Problem	Cause	Solution
Upperstructure does not swing	Faulty swing parking brake	* Repair or replace
	Faulty swing parking brake release valve	* Repair or replace
	Broken swing motor	* Repair or replace
	Faulty pilot valve	* Replace
	Faulty pilot circuit line	* Repair or replace
Swing is not smooth	Worn swing gear	* Repair or replace
	Damaged swing bearing and bearing balls.	* Repair or replace
	Lack of grease	Refill

Items with * mark: Consult your nearest Hitachi dealer.

Immediately after the control valve, swing motor relief valve and/or the swing motor is replaced, a noise may be emitted and/or operation may not be performed smoothly due to air trapped in the hydraulic line.
Slowly continue to operate the machine for approx. 10 minutes to bleed air.
After repair work is complete, be sure to check the oil level in the hydraulic oil tank. Refill hydraulic oil as needed.

Engine Speed

Problem	Cause	Solution
Even if operating the engine control dial, the engine speed does not change.	Blown fuse	Replace
	Faulty engine control dial	* Replace
	Poor contact in connector	* Repair or replace
	Damaged wire harness (between EC dial and MC, or MC and ECM)	* Repair
	Faulty controller (MC, ECM)	* Replace
Work mode does not change.	Faulty mode switch	* Replace
	Poor contact in connector	* Repair or replace
	Damaged wire harness (between MC and monitor)	* Repair
	Faulty controller (MC)	* Replace
	Faulty solenoid valve	* Repair or replace
Auto-idle is inoperable or not released.	Faulty pressure sensor.	* Replace
	Poor contact in connector	* Repair or replace
	Damaged wire harness	* Repair
	Faulty controller.	* Replace

Items with * mark: Consult your nearest Hitachi dealer.

Pump Control

Problem	Cause	Solution
Front attachment and/or travel speed is slow.	Blown control fuse	Replace
	Poor contact in connector	* Repair or replace
	Damaged wire harness	* Repair
	Faulty controller.	* Replace
	Faulty pump solenoid valve.	* Replace
	Faulty pressure sensor.	* Replace

Items with * mark: Consult your nearest Hitachi dealer.

Others

The machine may have a noise, excessive vibration, and abnormal smell when any trouble occurs.
Always beware of the machine conditions during operation.

Specifications ZX75US-5A

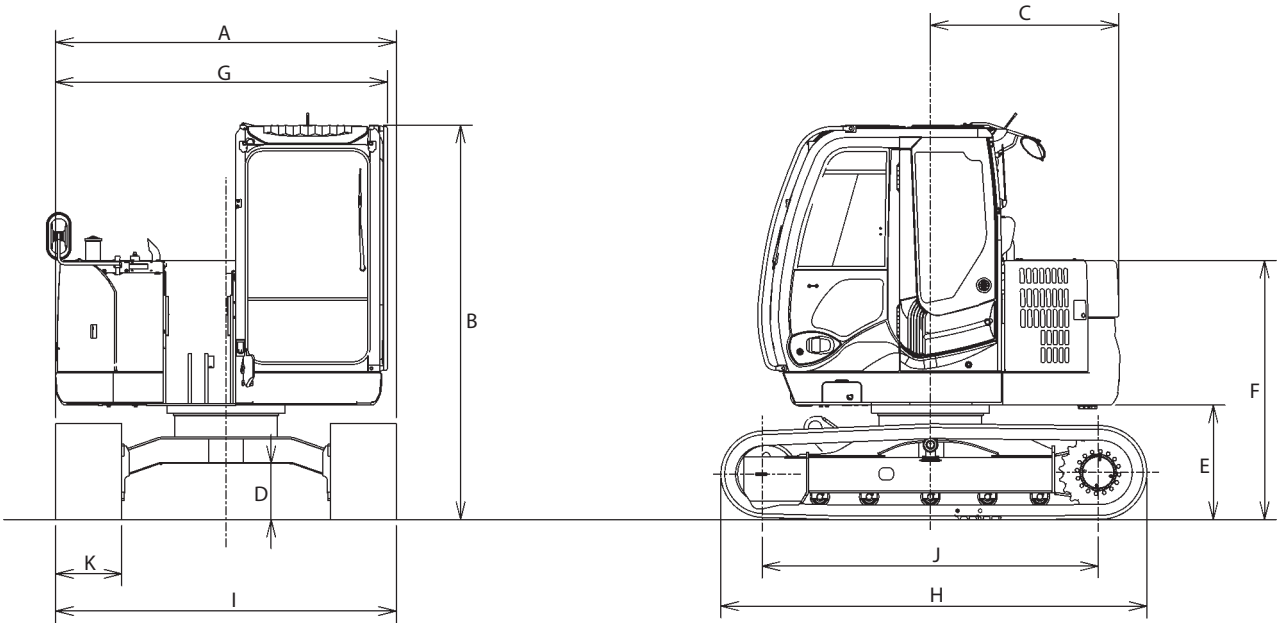

M1P1-12-011

Model	ZX75US-5A
Front-End Attachment	1.62 m (5 ft 4 in) Arm
Standard Bucket Capacity (Heaped)	PCSA 0.28 m^3 (0.37 yd^3), CECE 0.24 m^3
Operating Weight	7200 kg (15900 lb)
Base Machine Weight	6070 kg (13400 lb)
Engine	4TNV94L 34.1 kW/2000 min^{-1} (45.7 HP/2000 rpm)
A: Overall Width	2320 mm (7 ft 7 in)
B: Cab Height	2690 mm (8 ft 10 in)
C: Rear End Swing Radius	1290 mm (4 ft 3 in)
D: Minimum Ground Clearance	* 360 mm (1 ft 2 in)
E: Counterweight Clearance	* 740 mm (2 ft 5 in)
F: Engine Cover Height	* 1830 mm (6 ft 0 in)
G: Overall Width of Upperstructure	2260 mm (7 ft 5 in)
H: Undercarriage Length	2920 mm (9 ft 7 in)
I: Undercarriage Width	2320 mm (7 ft 7 in)
J: Sprocket Center to Idle Center	2290 mm (7 ft 6 in)
K: Track Shoe Width	450 mm (18 in)
Ground Pressure	31 kPa (0.32 kgf/cm^2, 4.5 pst)
Swing Speed	10.5 min^{-1} (rpm)
Travel Speed	5.0/3.1 km/h (3.1/1.9 mph)
Gradeability	35° (tan θ = 0.70)

*NOTE: * The dimensions do not include the height of the shoe lug.*

Working Ranges ZX75US-5A

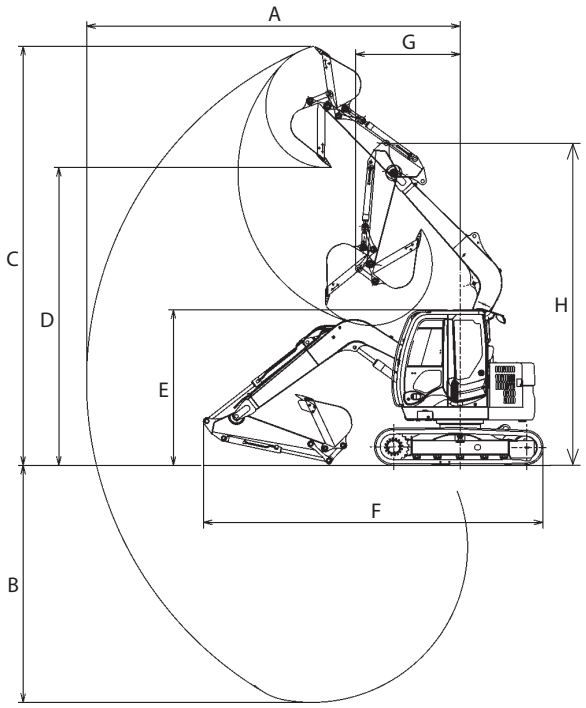

Backhoe

M1P1-12-007

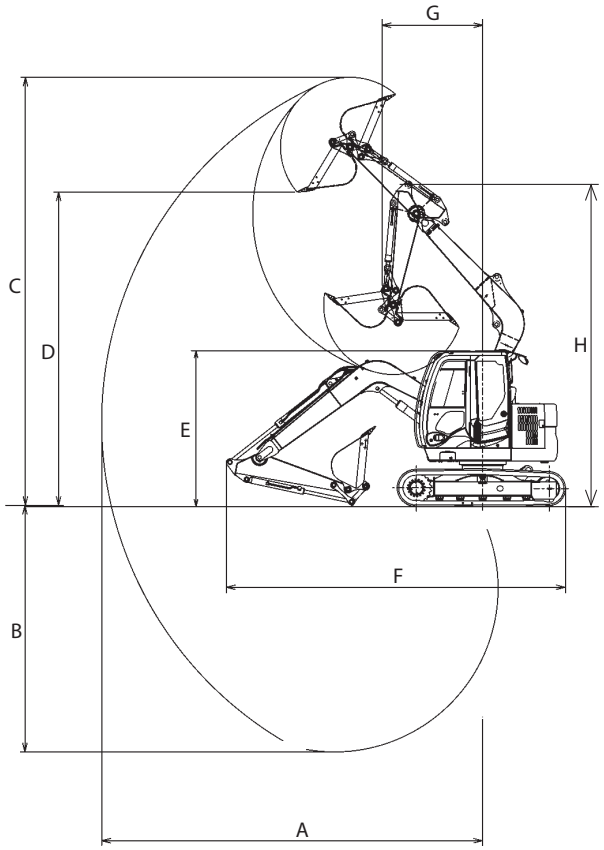

Face shovel (Reversed hoe bucket)

M1P1-12-008

Item \ Category	1.62 m (5 ft 4 in) Arm				2.12 m (7 ft 0 in) Arm			
	Backhoe		Shovel		Backhoe		Shovel	
	mm	ft·in	mm	ft·in	mm	ft·in	mm	ft·in
A: Maximum Digging Reach	6430	21′1″	6570	21′7″	6920	22′8″	7050	23′2″
B: Maximum Digging Depth	4110	13′6″	4250	14′0″	4610	15′2″	4750	15′7″
C: Maximum Cutting Height	7210	23′8″	7370	24′2″	7610	25′0″	7780	25′6″
D: Maximum Dumping Height	5120	16′10″	5390	17′8″	5510	18′1″	5830	19′2″
E: Overall Height	2690	8′10″	2690	8′10″	2690 (without Bucket)	8′10″ (without Bucket)	2690 (without Bucket)	8′10″ (without Bucket)
					2830 (with Bucket)	9′3″ (with Bucket)	2830 (with Bucket)	9′3″ (with Bucket)
F: Overall Length	5880	19′4″	5880	19′4″	5950	19′6″	5950	19′6″
G: Minimum Swing Radius	1810	5′11″	1810	5′11″	2170	7′1″	2170	7′1″
H: Minimum Swing Radius Height	5590	18′4″	5590	18′4″	5610	18′5″	5610	18′5″

NOTE: "E: Overall Height" includes the height of shoe lug; Other dimensions do not include the height of the shoe lug.

Shoe Types and Applications ZX75US-5A

Shoe Width		450 mm (18″) Grouser shoe	600 mm (24″) Grouser shoe	450 mm (18″) Flat shoe	450 mm (18″) Pad Crawler Shoe	450 mm (18″) Rubber Crawler Shoe
Application		For Ordinary Ground (Standard)	For Weak Footing (Option)	For Paved Road (Option)	For Paved Road (Option)	For Paved Road (Option)
Operating Weight	kg (lb)	7200 (15900)	7380 (16300)	7380 (16300)	7250 (16000)	7220 (16000)
Base Machine Weight	kg (lb)	6060 (13400)	6240 (13800)	6240 (13800)	6110 (13500)	6080 (13500)
Cab Height	mm (ft·in)	2690 (8′10″)	2690 (8′10″)	2700 (8′10″)	2720 (8′11″)	2700 (8′10″)
Minimum Ground Clearance	mm (ft·in)	* 360 (1′2″)	* 360 (1′2″)	390 (1′3″)	410 (1′4″)	390 (1′3″)
Undercarriage Length	mm (ft·in)	2920 (9′7″)	2920 (9′7″)	2940 (9′7″)	2980 (9′9″)	2940 (9′8″)
Undercarriage Width	mm (ft·in)	2320 (7′7″)	2470 (8′1″)	2320 (7′7″)	2320 (7′7″)	2320 (7′7″)
Ground Pressure		31 kPa (0.32 kgf/cm^2, 4.5 psi)	24 kPa (0.25 kgf/cm^2, 3.5 psi)	32 kPa (0.33 kgf/cm^2, 4.6 psi)	31 kPa (0.32 kgf/cm^2, 4.5 psi)	31 kPa (0.32 kgf/cm^2, 4.5 psi)

NOTE:
- *The specifications for the front-end attachment is for 1.62 m (5 ft 4 in) arm with PCSA 0.28 m^3 (0.37 yd^3) bucket.*
- *600 mm (24 in) grouser shoe, 450 mm (18 in) flat shoe, 450 mm (18 in) pad crawler shoe and 450 mm (18 in) rubber pad shoe should not be used on gravel or rocky ground.*
- ** The dimensions do not include the height of the shoe lug.*

Specifications ZX85USB-5A

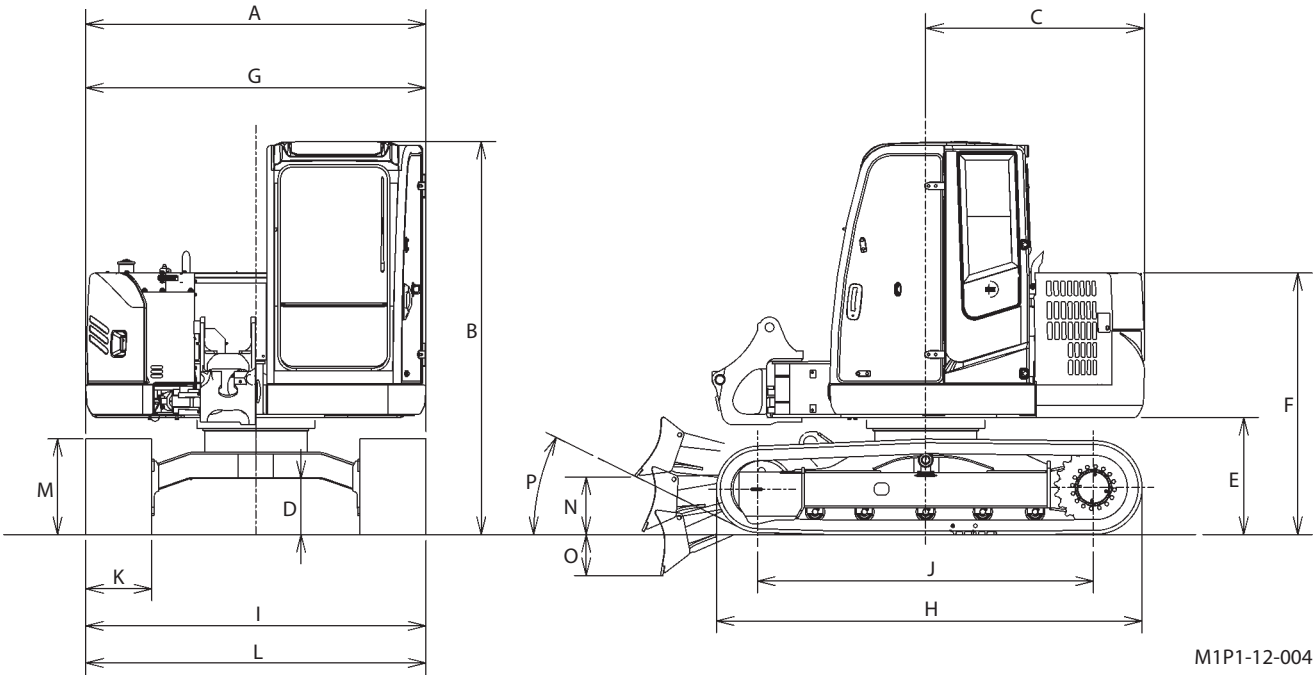

Model	ZX85USB-5A
Type of Front-End Attachment	Boom-Swing Type 1.62 m (5 ft 4 in) Arm
Bucket Capacity (Heaped)	PCSA 0.28 m^3 (0.37 yd^3), CECE 0.24 m^3
Operating Weight	8550 kg (18900 lb)
Base Machine Weight	7130 kg (15800 lb)
Engine	4TNV94L 34.1 kW/2000 min^{-1} (45.7 HP/2000 rpm)
A: Overall Width (Excluding Back Mirrors)	2260 mm (7 ft 5 in)
B: Cab Height	2530 mm (8 ft 4 in)
C: Rear End Swing Radius	1490 mm (4 ft 11 in)
D: Minimum Ground Clearance	* 360 mm (1 ft 2 in)
E: Counterweight Clearance	* 720 mm (2 ft 4 in)
F: Engine Cover Height	* 1810 mm (5 ft 11 in)
G: Overall Width of Upperstructure	2260 mm (7 ft 5 in)
H: Undercarriage Length	2920 mm (9 ft 7 in)
I: Undercarriage Width	2200 mm (7 ft 3 in)
J: Sprocket Center to Idler Center	2290 mm (7 ft 6 in)
K: Track Shoe Width	450 mm (18 in) (Grouser shoe)
L: Blade Width	2200 mm (7 ft 3 in)
M: Blade Height	460 mm (1 ft 6 in)
N: Blade Bottom Highest Position (above ground level)	* 360 mm (14.2 in)
O: Blade Bottom Lowest Position (below ground level)	* 300 mm (11.8 in)
P: Maximum Approach Angle	25.8 degree
Ground Pressure	37 kPa (0.38 kgf/cm^2, 5.4 psi)
Swing Speed	10.5 min^{-1} (rpm)
Travel Speed	5.0/3.1 km/h (3.1/1.9 mph)
Gradeability	35 ° ($\tan\theta = 0.70$)

*NOTE: * The dimensions do not include the height of the shoe lug.*

Working Ranges ZX85USB-5A

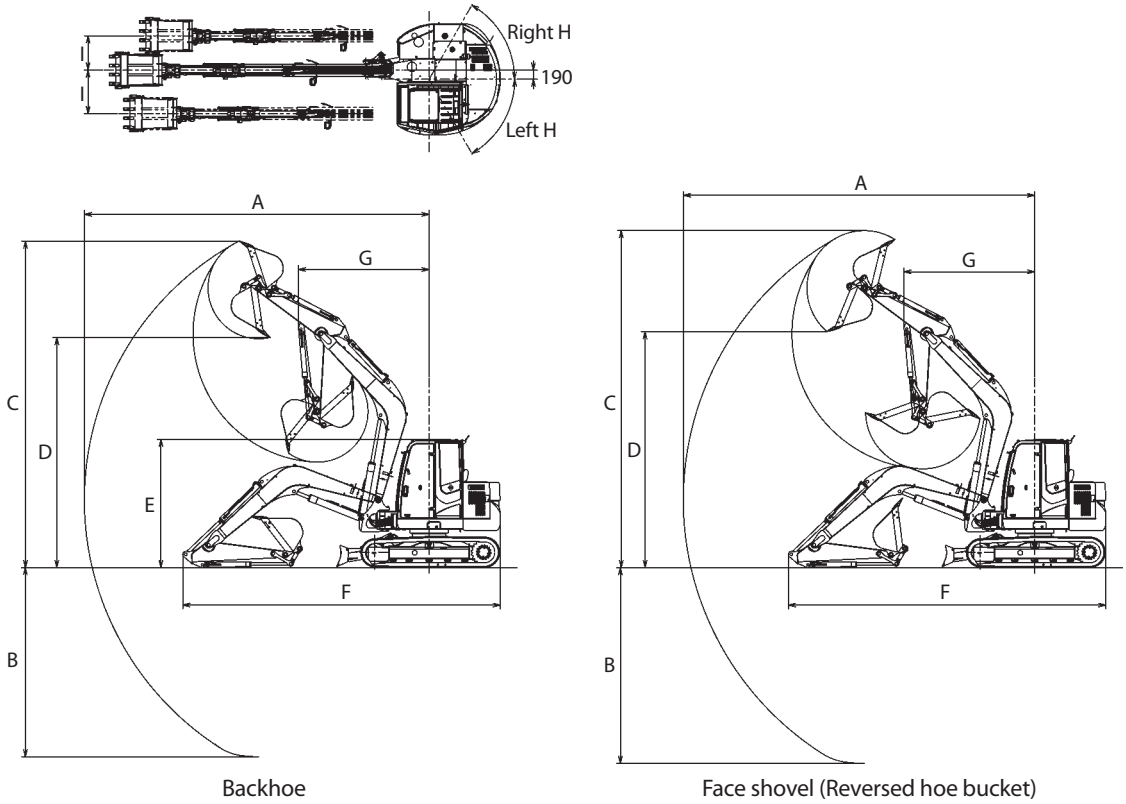

Backhoe

Face shovel (Reversed hoe bucket)

M1P1-12-012

Item \ Category	1.62 m (5 ft 4 in) Arm				2.12 m (7 ft 0 in) Arm			
	Backhoe		Shovel		Backhoe		Shovel	
	mm	ft·in	mm	ft·in	mm	ft·in	mm	ft·in
A: Maximum Digging Reach	7210	23′8″	7350	24′1″	7700	25′3″	7840	25′9″
B: Maximum Digging Depth	4010	13′2″	4150	13′7″	4510	14′9″	4650	15′3″
C: Maximum Cutting Height	6770	22′3″	6980	22′11″	7140	23′5″	7340	24′1″
D: Maximum Dumping Height	4720	15′6″	4870	15′12″	5080	16′8″	5260	18′5″
E: Overall Height	2530 mm (8′4″)							
F: Overall Length	6660	21′10″	6660	21′10″	6820	22′5″	6820	22′4″
G: Minimum Swing Radius	2740	8′12″	2740	8′12″	2900	9′6″	2900	9′6″
H: Maximum Boom-Swing Angle	Left 60 °/Right 60 °							
I: Offset Distance	Left 910 (3′0″) Right 720 (2′4″)							

NOTE: "E: Overall Height" includes the height of shoe lug; Other dimensions do not include the height of the shoe lug.

Shoe Types and Applications ZX85USB-5A

Shoe Width		450 mm (18″) Grouser shoe	600 mm (24″) Grouser shoe	450 mm (18″) Pad Crawler Shoe	450 mm (18″) Rubber Crawler Shoe
Application		For Ordinary Ground (Standard)	For Weak Footing (Option)	For Paved Road (Option)	For Paved Road (Option)
Operating Weight	kg (lb)	8550 (18900)	8730 (19300)	8600 (19000)	8570 (18900)
Base Machine Weight	kg (lb)	7130 (15800)	7310 (16200)	7180 (15900)	7150 (15800)
Cab Height	mm (ft·in)	2530 (8′4″)	2530 (8′4″)	2560 (8′5″)	2540 (8′4″)
Minimum Ground Clearance	mm (ft·in)	* 360 (1′2″)	* 360 (1′2″)	410 (1′4″)	390 (1′3″)
Undercarriage Length	mm (ft·in)	2920 (9′7″)	2920 (9′7″)	2980 (9′9″)	2940 (9′8″)
Undercarriage Width	mm (ft·in)	2200 (7′3″)	2350 (7′9″)	2200 (7′3″)	2200 (7′3″)
Ground Pressure		37 kPa (0.38 kgf/cm^2, 5.4 psi)	28 kPa (0.28 kgf/cm^2, 3.9 psi)	37 kPa (0.38 kgf/cm^2, 5.4 psi)	37 kPa (0.38 kgf/cm^2, 5.4 psi)

NOTE:
- *The specifications for the front-end attachment is for 1.62 m (5 ft 4 in) arm with PCSA 0.28 m^3 (0.37 yd^3) bucket.*
- *600 mm (24 in) grouser shoe, 450 mm (18 in) pad crawler shoe and 450 mm (18 in) rubber pad shoe should not be used on gravel or rocky ground.*
- ** The dimensions do not include the height of the shoe lug.*

Hydraulic Breaker, Hydraulic Crusher and Quick Coupler

Selecting a Breaker or Crusher

Select a breaker, crusher or quick coupler with the correct size and weight for your machine, considering the stability of the machine, hydraulic oil pressure and flow rate of the breaker, crusher or quick coupler. See your authorized dealer for correct breaker information.

Precautions for Operation

Carefully study the operation manuals of the breaker, crusher and quick coupler.
To avoid damaging the machine, hydraulic breaker, crusher or quick coupler, follow the precautions given below.

Precautions for Connecting Breaker or Crusher Piping.

Do not allow impurities to enter into the system when switching the breaker, crusher or the quick coupler with the bucket.
When the breaker, crusher or quick coupler is not used, apply the cover to the pipe opening on the arm top and install the plug or cap into the hose end of the breaker, crusher or the quick coupler to prevent impurities from entering the system.
Be sure to provide spare covers and plugs in the tool box so that they will be available when needed.
After connecting, check the connecting seal fitting for oil leakage, and pipe clamp bolts for looseness.

Pipings for Breaker and Crusher

Operational procedures for stop valves and selection valve.

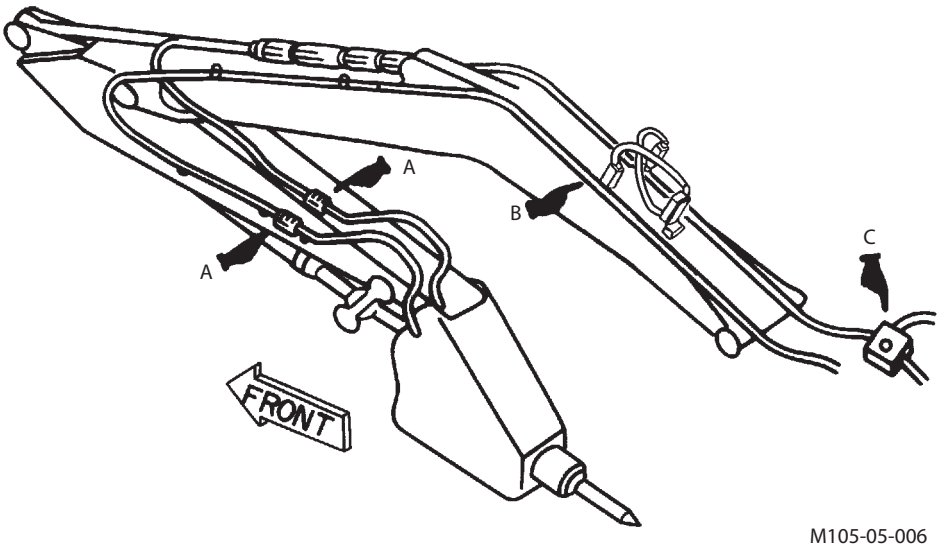

M105-05-006

Stop Valves A	Stop Valves B	Stop Valves C
Close: When not using attachment or is detached.	Close: When using crusher	Refer to the right table
Open: When using attachment	Open: When using breaker	

A, B Stop Valves	Close	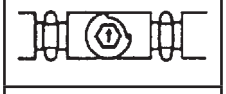
	Open	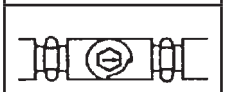
C Selection Valves	when using breaker	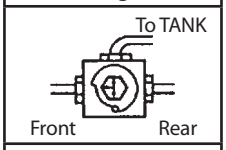
	when using crusher	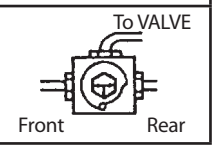

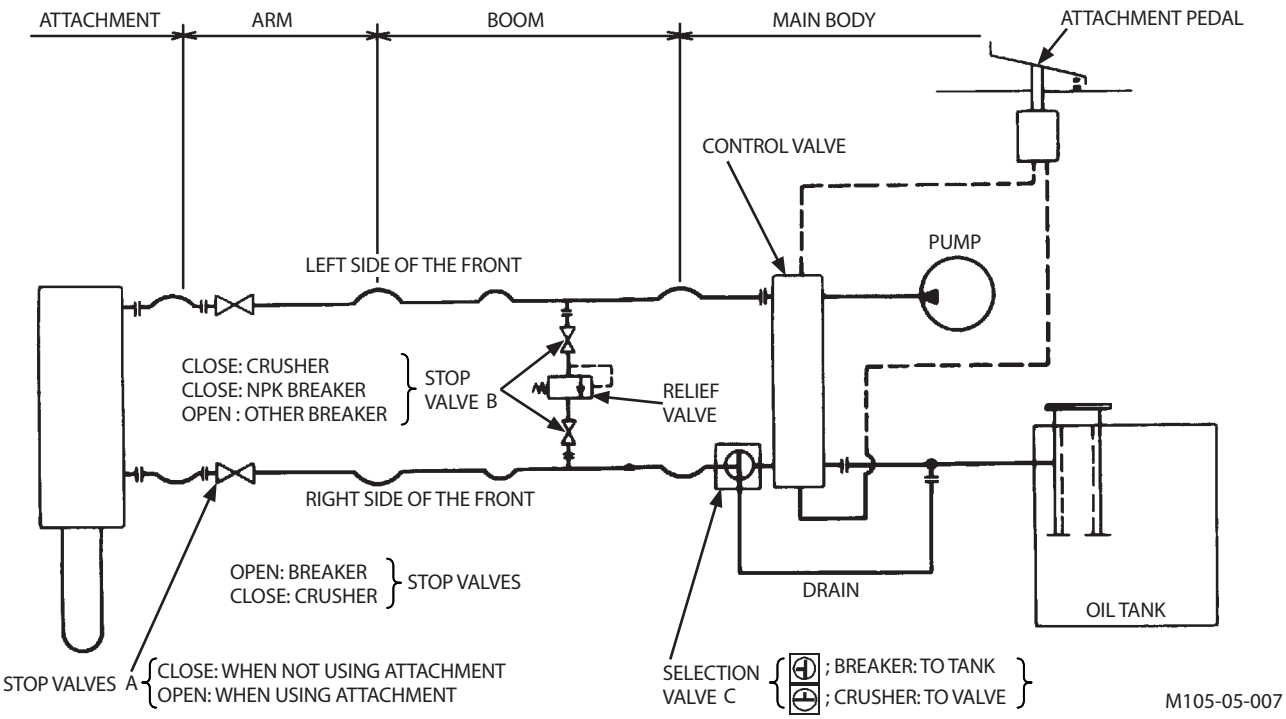

M105-05-007

Secondary Relief Pressure Adjustment

Depending on the breaker model, the secondary relief valve relief set pressure differs.
Consult your nearest Hitachi dealer for installing a breaker.

Attachment Pedal (Hydraulic Breaker) (Optional)

The Breaker can be operated using attachment pedal (1) located on the right front of the seat, as illustrated.

CAUTION: Be sure to lock attachment pedal (1) with pedal lock (2) when the attachment pedal is not in use. Do not allow your foot to rest on the pedal when the attachment pedal (1) is not in use. When changing pedal lock (2) position, pull the pilot control shut-off lever up to the LOCK position.

1. Move pedal lock (2) forward to the UNLOCK position.
2. Push down on attachment pedal (1) to operate the breaker.

   Loosen stopper bolt (4) until stopper bolt (4) comes in contact with the bracket in attachment pedal (1) neutral to prevent attachment pedal (1) from being stepped backward.
3. Remove foot from attachment pedal (1) to stop the breaker.
4. Always keep attachment pedal (1) locked with pedal lock (2) when attachment pedal (1) is not in use.

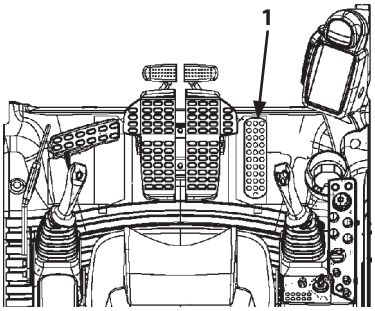

ZX75US-5A
MDED-13-001

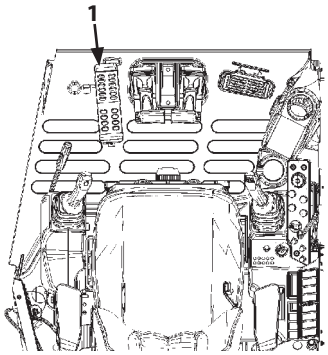

ZX85USB-5A
MDED-13-002

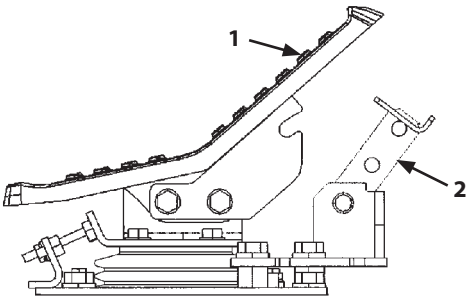

Unlocked Attachment Pedal
MDED-13-003

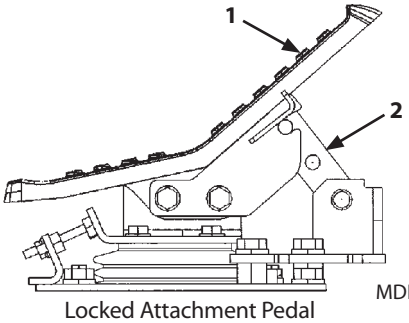

Locked Attachment Pedal
MDED-13-004

Precautions for Breaker Operation

WARNING: Machine stability is reduced as the breaker is much heavier than the bucket. When using a breaker, the machine is more apt to tip over. Also, flying objects may hit the cab or other part of the machine. Observe the following precautions and take any other precautions necessary to prevent accidents and machine damage from occurring.

Avoid Hitting Objects with Breaker.

The breaker is heavier than the bucket, causing the breaker to lower faster.
Take care not to hit any objects with breaker. Doing so will result in damage to the breaker, the front attachment, and/or the upperstructure. Always move (lower) the breaker slowly to position the tip of the chisel on the object to be broken before starting breaker operation.



MZX5-13-019

Avoid Moving Objects with Breaker.

Do not use the breaker and/or the bracket to move objects. Damage to the boom, arm, and/or breaker may result.
Do not use the breaker and/or the swing function to move objects. Damage to the boom, arm, and/or breaker may result.



MZX5-13-020

Avoid Operating Breaker at Cylinder Stroke End

Always operate the breaker by positioning the cylinder rods 100 mm or longer before the stroke end position.
When operating the breaker with cylinders fully retracted or extended, hydraulic cylinders, arm or boom may be damaged.

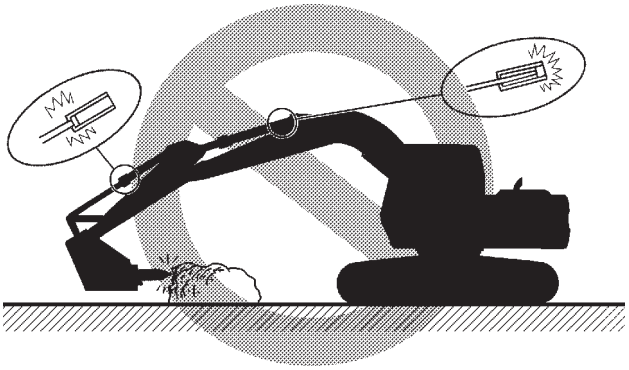

MZX5-13-021

Stop Operation If Breaker Hydraulic Hoses Jump Abnormally.

Change in breaker accumulator pressure or a damaged accumulator will cause abnormal hose jumping and may cause breaker and/or machine damage.
Immediately stop the machine operation. Failure to do so may result in serious failure in the hydraulic system including pumps.
Contact your nearest HITACHI dealer.

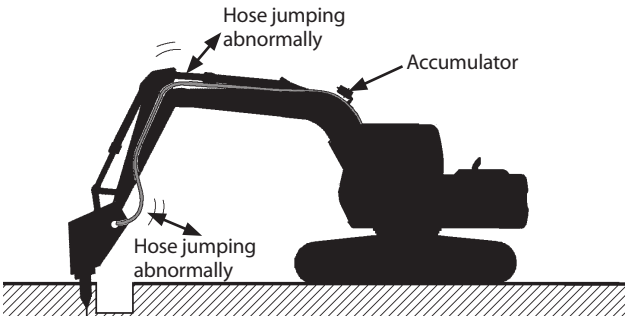

M104-05-058

Do Not Operate the Breaker in Water.

Doing so will cause rust and seal damage, resulting in damage to the hydraulic system components.
Rust, dust and water may enter into the hydraulic oil through the broken seal, damage to the hydraulic system may result.

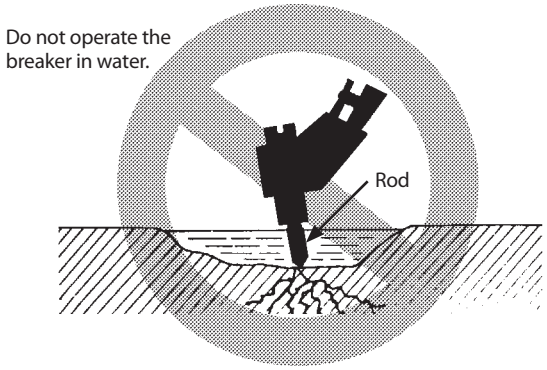

MZX5-13-017

Do Not Use Breaker for Lifting Operation.

The machine tipping over and/or breaker damage may result.

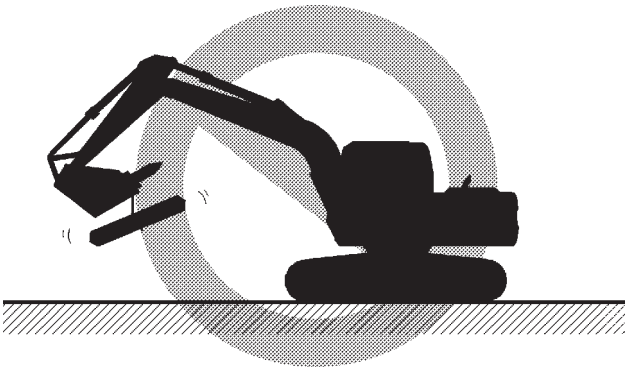

MZX5-13-022

Do Not Operate the Breaker to the Side of the Machine.

The machine may become unstable and undercarriage component life may shorten as a result from operating the breaker to the side of the machine.

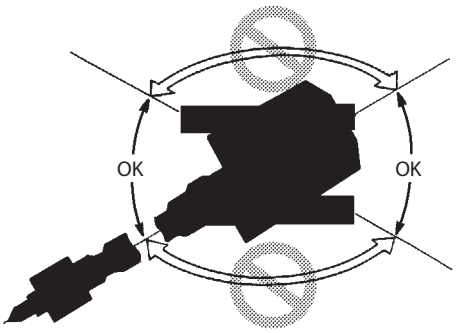

ZX75US-5A MZX5-13-023

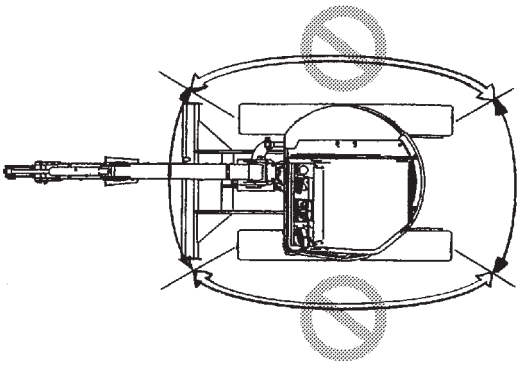

ZX85USB-5A MZX5-13-005

Operate the Hydraulic Excavator Carefully to Avoid Hitting the Boom.

When the arm rolled in with the breaker equipped, the chisel may come in contact with the boom.

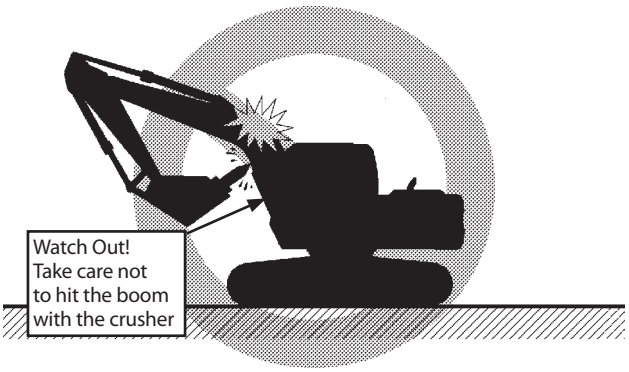

MZX5-13-024

Do Not Operate Breaker with the Arm Positioned Vertically.

Excessive vibration to the arm cylinder will occur, causing oil leakage.



MZX5-13-006

Press the Breaker So That the Chisel (The Axis) Is Positioned and Thrusted Perpendicular to the Object.

Failure to do so may damage the chisel or may cause seized piston.

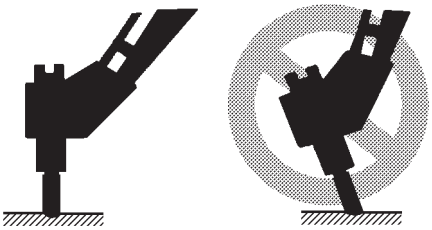

MZX5-13-007

Do Not Operate the Breaker Continuously Longer Than One Minute.

Failure to do so may result in premature wear of the chisel. If an object could not be broken within one minute, apply the chisel to other locations, less than one minute for each location.

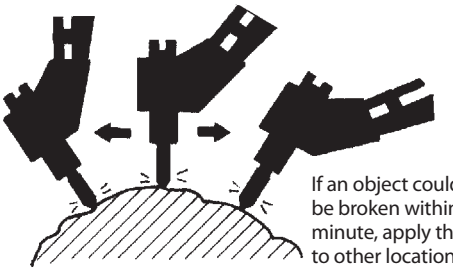

M147-05-015

Raising the Front Part of the Undercarriage by Pressing Down the Breaker May Cause Damage to the Front Attachment.

Never raise the front edge of the undercarriage higher than 150 mm (6 in) by pressing the breaker down.

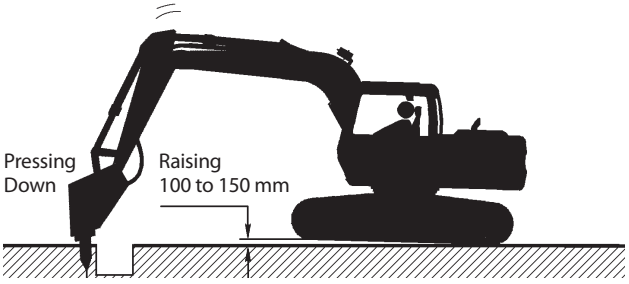

M147-05-016

Do Not operate breaker with the boom swing operation. (ZX85USB-5A)

Do not operate the breaker for long period of time while swinging the boom.
Failure to do so may shorten the service life of the main frame.

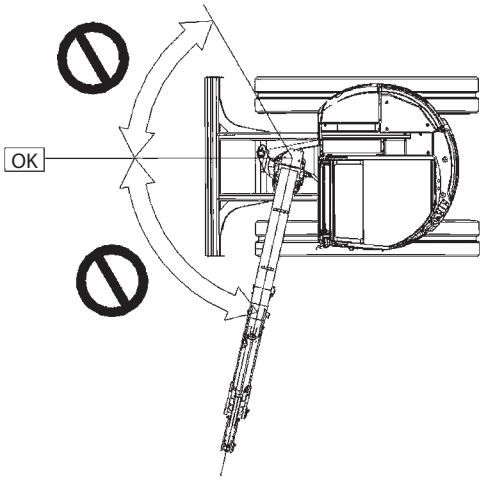

MADB-13-044

Change Hydraulic Oil and Replace Full-Flow Filter Element

Hydraulic breaker operation subjects the hydraulic system to become contaminated faster and to quickly deteriorate the hydraulic oil.
Failure to adhere to proper maintenance intervals may result in damage to the base machine and the breaker.
In order to extend the service life particularly of the hydraulic pump, change the hydraulic oil and the full-flow filter element at the specified frequency given below. (Refer to the "Hydraulic System" in the "MAINTENANCE" Section.)

Replacement intervals differ depending on the brand of hydraulic oil used. Refer to the Hydraulic System in the MAINTENANCE section.
Use the high performance element (micro-glass) on excavators engaged in demolition and logging work.

NOTE: Full-flow filter restriction indicator is optional. If a filter-paper element is used, this indicator does not operate. (Refer to the "Hydraulic System" in the "MAINTENANCE" Section.)

Attachment Pedal (Hydraulic Crusher) Std. Model (Optional)

The crusher can be operated using attachment pedal (1) located on the right front of the seat, as illustrated.

CAUTION: Be sure to lock attachment pedal (1) with pedal lock (2) when the attachment pedal is not in use. Do not allow your foot to rest on the pedal when the attachment pedal (1) is not in use. When changing pedal lock (2) position, pull the pilot control shut-off lever up to the LOCK position.

1. Move pedal lock (2) forward to the UNLOCK position.
2. Push down on attachment pedal (1) either forward or backward to open or close the crusher.
3. Remove foot from attachment pedal (1) to stop the crusher.
4. Always keep attachment pedal (1) locked with pedal lock (2) when attachment pedal (1) is not in use.

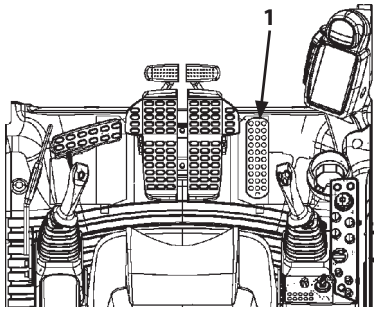

ZX75US-5A
MDED-13-001

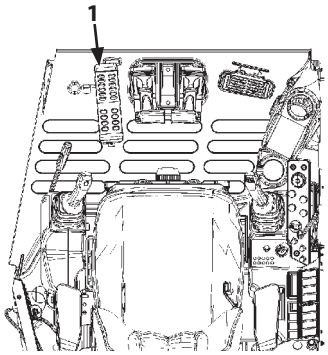

ZX85USB-5A
MDED-13-002

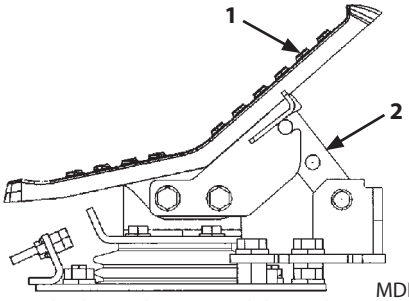

MDED-13-005
Locked Attachment pedal (Crusher)

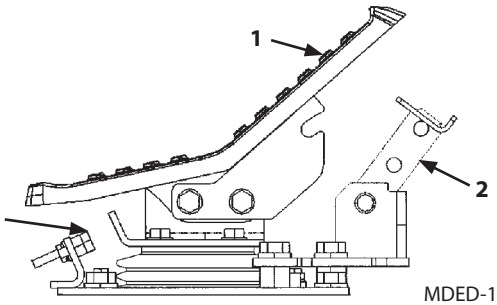

MDED-13-006
Unlocked Attachment pedal (Crusher)

Precautions for Crusher Operation

Prevent machine tipping over and damage to the front attachment. Observe the following precautions for crusher operation.

WARNING: Machine stability is reduced as crusher is much heavier than bucket. When operating with a crusher, the machine is more apt to tip over. Falling or flying objects may hit the cab or other part of the machine. Observe the following precautions and take any other precautions necessary to prevent accidents and machine damage from occurring.

- Do not allow the machine's weight to be supported by the crusher or bucket cylinder with the bucket cylinder fully extended or retracted. Failure to do so may result in damage to the front attachment. In particular, avoid doing so with the bucket cylinder fully extended, as the front attachment will be easily damaged.
  Take care to prevent this from happening when dismantling foundation structures using the crusher.

- Using the front attachment, do not raise the base machine off the ground with the arm cylinder fully extended. Failure to do so may result in damage to the arm cylinder.

- When a heavyweight attachment such as a crusher is installed, avoid quickly starting or stopping the front attachment. Failure to do so may result in damage to the front attachment.

- Do not attempt to perform crushing on either side of the machine. Always perform crushing operations to the fore or rear, parallel with the tracks. Otherwise, tipping over may occur.



MZX5-13-008

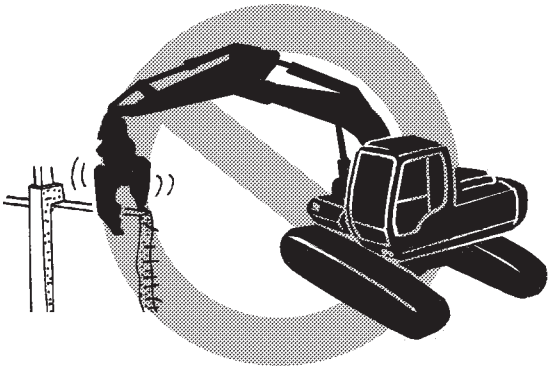

MZX5-13-009

- When the arm rolled in with the crusher equipped, the crusher may come in contact with the boom.

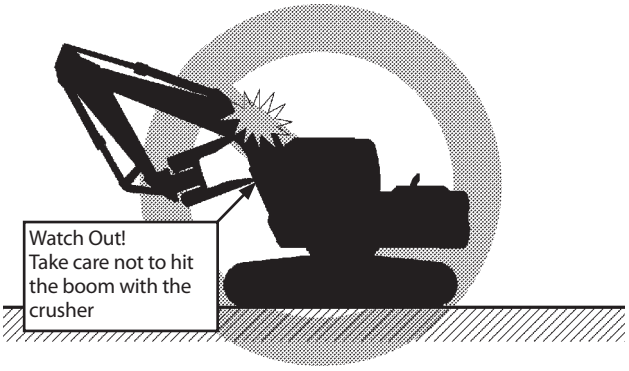

MZX5-13-010

- When operating the crusher up high with the boom fully raised, be careful of falling objects.



MZX5-13-011

- When operating the crusher on a floor in a building, first confirm that the floor has sufficient strength to support the load caused by crushing, in addition to the machine weight.
  The load equivalent or higher than the machine weight may be applied on floor depending on the operation method.

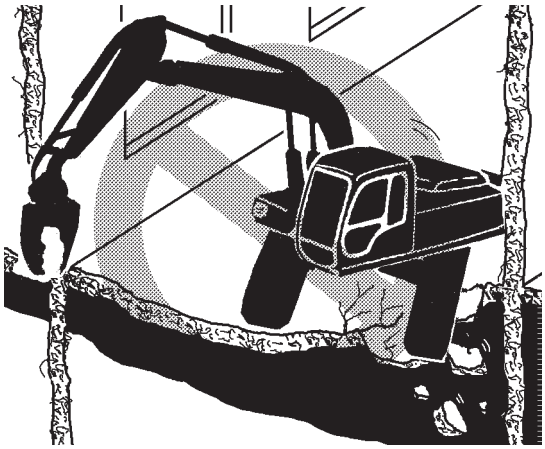

MZX5-13-012

- Always operate the crusher on a stable, level surface, not on a slope or on crushed scraps.
- Do not use the crusher to haul or load crushed scraps.
- If a multiple number of attachments, such as crusher and bucket, or crusher and breaker, are used, replacing them with each other at intervals, impurities are more apt to enter the hydraulic system and the hydraulic oil deteriorates quickly. For this reason, replace the hydraulic oil tank filter and change the hydraulic oil at the intervals specified in the breaker time sharing diagram in the previous section.
- Always remove the crusher from the excavator before transporting the machine. Do not fully extend the bucket cylinder when transporting, as this may damage the front attachment, when vibrations arise during transportation.

Attachment

Allowable Weight Limits of Installed Attachment

- When an attachment other than the standard bucket is installed on the machine, the machine stability will be different.
  If a heavy attachment is used, not only will controllability be affected but also machine stability will be reduced, possibly causing safety hazard.
- Before installing attachments such as hydraulic breaker, crusher (concrete crusher), or pulverizer, take machine controllability into account when selecting the weight of the attachment by referring to the table below.

Unit : kg (lb)

Specification	Base Machine		Breaker		Crusher/Pulverizer	
	Model	Arm	Std. Weight	Max. Weight	Std. Weight	Max. Weight
Standard Type	ZX75US-5A	Std.	700 (1540)	750 (1650)	800 (1760)	950 (2090)
	ZX85USB-5A	Std.	550 (1210)	600 (1320)	650 (1430)	750 (1650)

- Breaker operation speed is faster than crusher operation so that the recommended breaker max. weights are reduced more than those of the crushers.
- The weight is not the only factor to be considered when selecting a breaker. Select proper manufacturer's breaker models while referring to the table on the next page.
- Avoid installing an attachment with a long overall length. Damage to the front attachment may result.
- When an attachment of the max. weight is installed, always operate the attachment over the front or rear side of the machine. In addition, avoid operating the attachment at the maximum reach.
- Crushers are heavier than breakers. Slowly move the control lever when operating a crusher.

Attachment Connection Parts

The attachment hydraulic line and connection parts are located as illustrated below. When the attachment is disconnected, be sure to install caps or plugs to the ends of both the arm and attachment side hydraulic lines to prevent dust from entering or from sticking.

Adapter tightening torque :
PF1 210 N·m (21 kgf·m, 150 lbf·ft)

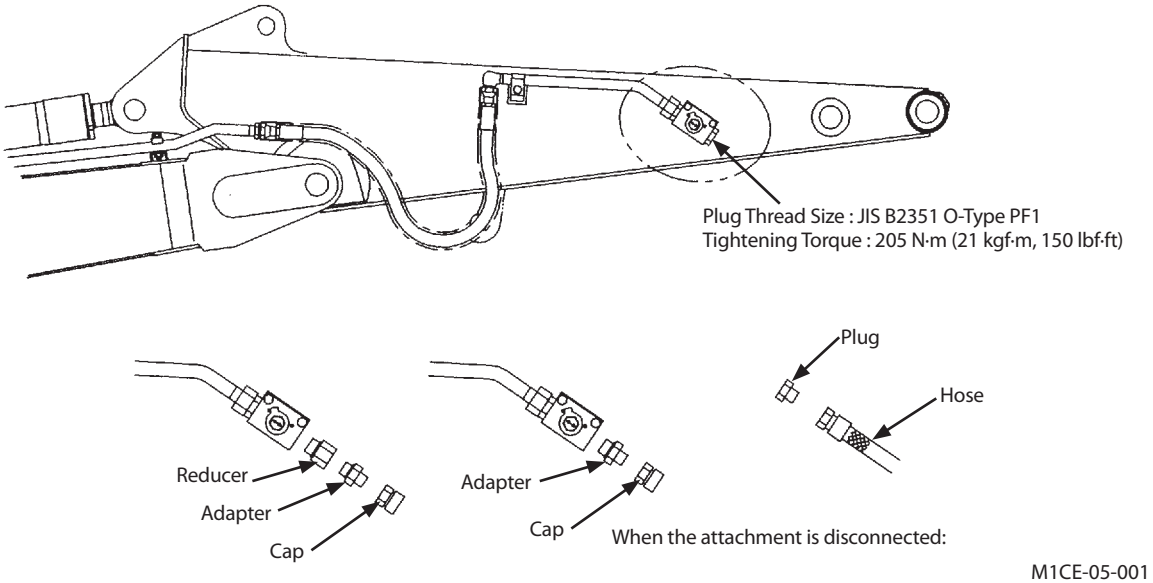

M1CE-05-001

Part No. List (Fill attachment manufacturer's part Nos. in the blank spaces.)

Maker	Adapter Size	Adapter	Cap	Plug	Hose
Form / Size	Male-Type PF-UNF	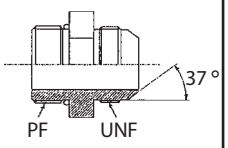	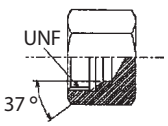	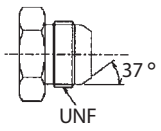	
	PF1-1-1/16-12UN	4456399	4222711	4222264	
	PF3/4-3/4-/16UN	*4279302	4223519	4225492	
Form / Size	Female-Type PF-PF30°	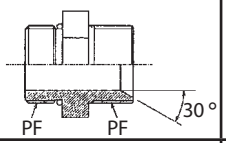	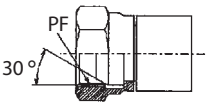	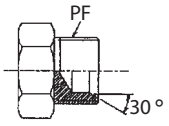	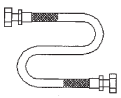
	PF1-PF3/4	4129457	9718916	4222047	
	PF3/4- PF 1/2	*4129227	9719234	4095927	
Form / Size	Male-Type PF-PF30°	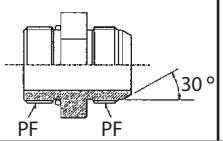	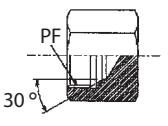	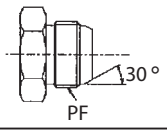	
	PF1-PF3/4	4456120	4222715	4222044	
	PF3/4-PF1/2		4222714	4222043	

* When using the adapter shown with mark *, reducer (P/N 4263448) must be installed.

Precaution for Arm Roll-In/Bucket Roll-In Combined Operation

When Installing an Attachment Longer Than Standard Bucket

WARNING: When an attachment (such as a hydraulic breaker, crusher or quick coupler), the overall length of which is longer than that of the bucket, is installed, the attachment may come in contact with the cab and/or the boom. Operate the machine with care not to allow the tip of the front attachment to hit the cab and/or the boom while rolling in the front attachment.

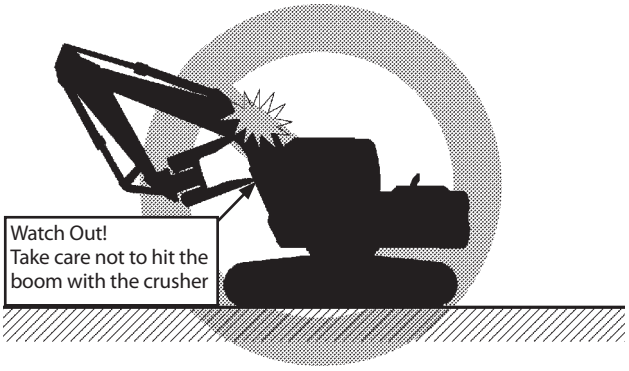

MZX5-13-010

Precaution for Arm Roll-In/Bucket Roll-In Combined Operation

---If Headguard-Integrated Cab or Rainguard is Equipped

WARNING: The bucket teeth will hit the headguard or rainguard if the bucket is rolled in with the arm fully rolled in, as illustrated. When performing combined operation of long arm roll-in/bucket roll-in or when rolling in the bucket with the arm fully retracted, be careful not to hit the headguard or rainguard with the bucket teeth.



MDED-13-007

Control Lever (HITACHI)

WARNING:

- **Never place any part of body beyond window frame. It could be crushed by the boom if boom control lever is accidentally bumped or otherwise engaged. Never remove the window sash bar.**
- **Make sure you know the location and function of each control before operating.**
- **Do not change the control lever operation pattern. Failure to do so may result in operation mistake of the machine.**

A label showing the control patterns of the levers and pedals is attached on the right side in the cab.

When a lever is released, it will automatically return to neutral, and that machine function will stop.

1- Swing Right
2- Swing Left
3- Arm Roll-In
4- Arm Roll-Out
5- Boom Lower
6- Boom Raise
7- Bucket Roll-In
8- Bucket Roll-Out

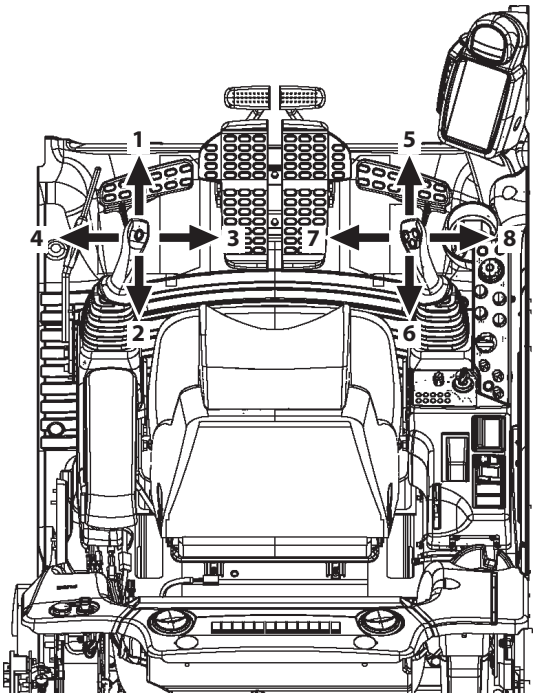

MDAA-01-288

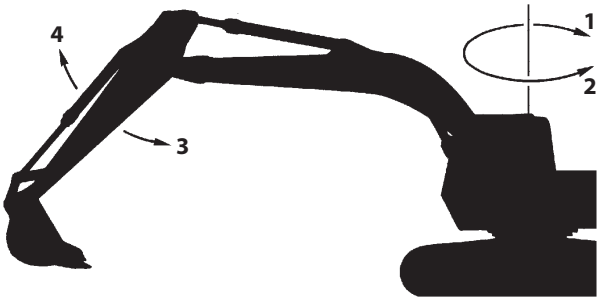

M104-05-001

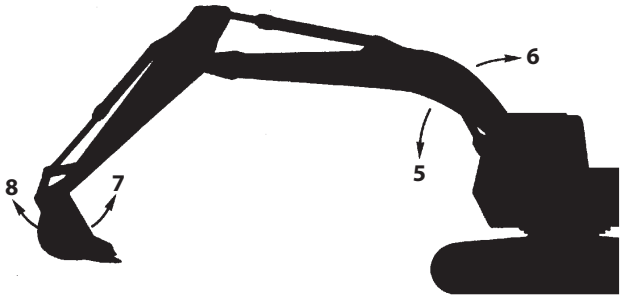

M104-05-002

Specifications ZX75US-5A (with Blade)

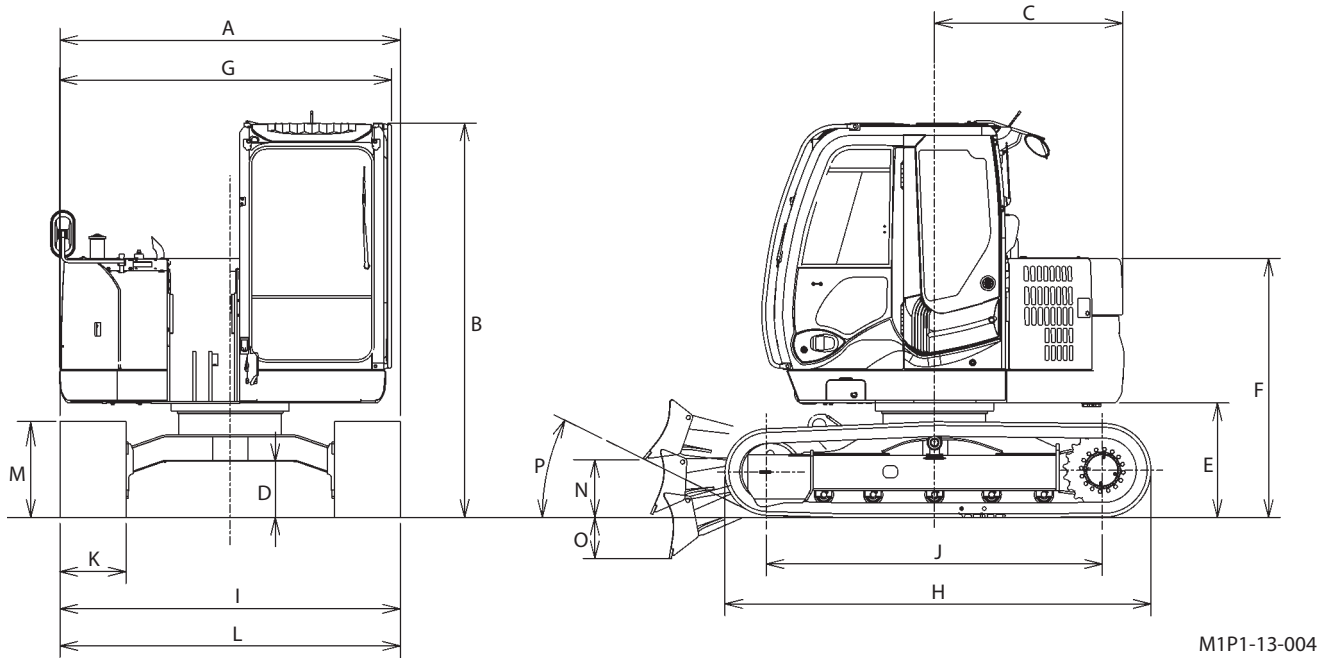

M1P1-13-004

Model	ZX75US-5A
Front-End Attachment	1.62 m (5 ft 4 in) Arm
Standard Bucket Capacity (Heaped)	PCSA 0.28 m^3 (0.37 yd^3), CECE 0.24 m^3
Operating Weight	7770 (17200 lb)
Base Machine Weight	6640 (14700 lb)
Engine	4TNV94L 34.1 kW/2000 min^{-1} (45.7 HP/2000 rpm)
A: Overall Width	2320 mm (7 ft 7 in)
B: Cab Height	2690 mm (8 ft 10 in)
C: Rear End Swing Radius	1290 mm (4 ft 3 in)
D: Minimum Ground Clearance	* 360 mm (1 ft 2 in)
E: Counterweight Clearance	* 740 mm (2 ft 5 in)
F: Engine Cover Height	* 1830 mm (6 ft 0 in)
G: Overall Width of Upperstructure	2260 mm (7 ft 5 in)
H: Undercarriage Length	2920 mm (9 ft 7 in)
I: Undercarriage Width	2320 mm (7 ft 7 in)
J: Sprocket Center to Idle Center	2290 mm (7 ft 6 in)
K: Track Shoe Width	450 mm (18 in)
L: Blade Width	2320 mm (7 ft 7 in)
M: Blade Height	460 mm (1 ft 6 in)
N: Blade Bottom Highest Position (above ground level)	* 360 mm (1 ft 2 in)
O: Blade Bottom Lowest Position (below ground level)	* 300 mm (1 ft 0 in)
P: Maximum Approach Angle	26.8 degree (tanθ = 0.51)
Ground Pressure	34 kPa (0.35 kgf/cm^2, 4.9 psi)
Swing Speed	10.5 min^{-1} (11.3 rpm)
Travel Speed	5.0/3.1 km/h (3.1/1.9 mph)
Gradeability	35° (tan θ = 0.70)

*NOTE: * The dimensions do not include the height of the shoe lug.*

Working Ranges ZX75US-5A (with Blade)

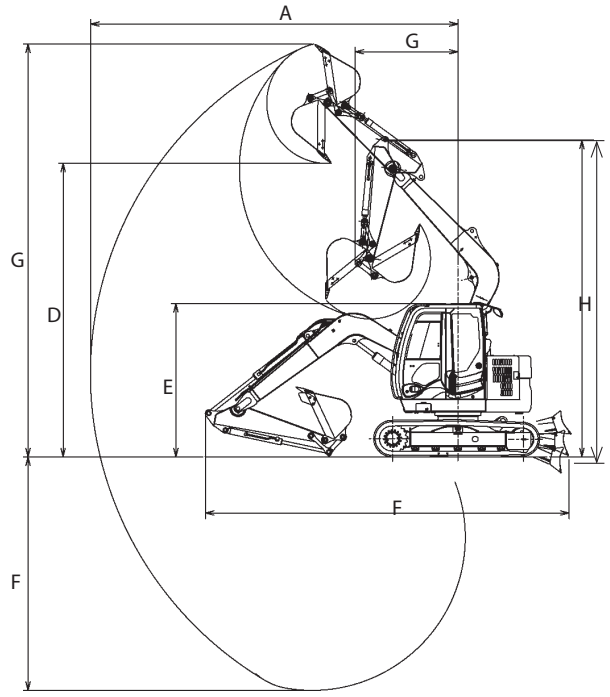

Backhoe

M1P1-13-005

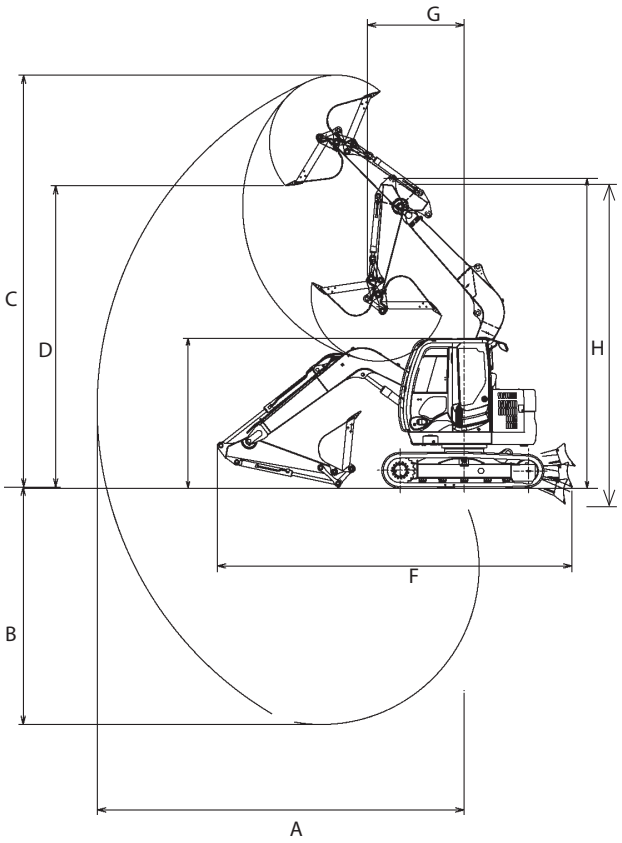

Face shovel (Reversed hoe bucket)

M1P1-13-006

Item \ Category	1.62 m (5 ft 4 in) Arm				2.12 m (7 ft 0 in) Arm			
	Backhoe		Shovel		Backhoe		Shovel	
	mm	ft·in	mm	ft·in	mm	ft·in	mm	ft·in
A: Maximum Digging Reach	6430	21′1″	6570	21′7″	6920	22′8″	7050	23′2″
B: Maximum Digging Depth	4110	13′6″	4250	14′0″	4610	15′2″	4750	15′7″
C: Maximum Cutting Height	7210	23′8″	7370	24′2″	7610	25′0″	7780	25′6″
D: Maximum Dumping Height	5120	16′10″	5390	17′8″	5510	18′1″	5830	19′2″
E : Overall Height	2690	8′10″	2690	8′10″	2690 (without Bucket)	8′10″ (without Bucket)	2690 (without Bucket)	8′10″ (without Bucket)
					2830 (with Bucket)	9′3″ (with Bucket)	2830 (with Bucket)	9′3″ (with Bucket)
F: Overall Length	6300	20′8″	6300	20′8″	6370	20′11″	6370	20′11″
G: Minimum Swing Radius	1810	5′11″	1810	5′11″	2170	7′1″	2170	7′1″
H: Minimum Swing Radius Height	5590	18′4″	5590	18′4″	5610	18′5″	5610	18′5″

NOTE: "E : Overall Height" includes the height of shoe lug; Other dimensions do not include the height of the shoe lug.

Shoe Types and Applications ZX75US-5A (with Blade)

Shoe Width		450 mm (18″) Grouser shoe	600 mm (24″) Grouser shoe	450 mm (18″) Flat shoe	450 mm (18″) Pad Crawler Shoe	450 mm (18″) Rubber Crawler Shoe
Application		For Ordinary Ground (Standard)	For Weak Footing (Option)	For Paved Road (Option)	For Paved Road (Option)	For Paved Road (Option)
Operating Weight	kg (lb)	7770 (17200)	7950 (17600)	7950 (17600)	7820 (17300)	7790 (17200)
Base Machine Weight	kg (lb)	6640 (14700)	6810 (15100)	6810 (15100)	6680 (14800)	6650 (14700)
Cab Height	mm (ft·in)	2690 (8′10″)	2690 (8′10″)	2700 (8′10″)	2720 (8′11″)	2700 (8′10″)
Minimum Ground Clearance	mm (ft·in)	* 360 (1′2″)	* 360 (1′2″)	390 (1′3″)	410 (1′4″)	390 (1′3″)
Undercarriage Length	mm (ft·in)	2920 (9′7″)	2920 (9′7″)	2940 (9′7″)	2980 (9′9″)	2940 (9′8″)
Undercarriage Width	mm (ft·in)	2320 (7′7″)	2470 (8′1″)	2320 (7′7″)	2320 (7′7″)	2320 (7′7″)
Ground Pressure		34 kPa (0.35 kgf/cm^2, 4.9 psi)	26 kPa (0.27 kgf/cm^2, 3.8 psi)	34 kPa (0.35 kgf/cm^2, 4.9 psi)	34 kPa (0.35 kgf/cm^2, 4.9 psi)	34 kPa (0.35 kgf/cm^2, 4.9 psi)

NOTE:
- *The specifications for the front-end attachment is for 1.62 m (5 ft 4 in) arm with PCSA 0.28 m^3 (0.37 yd^3) bucket.*
- *600 mm (24 in) grouser shoe, 450 mm (18 in) flat shoe, 450 mm (18 in) pad crawler shoe and 450 mm (18 in) rubber pad shoe should not be used on gravel or rocky ground.*
- ** The dimensions do not include the height of the shoe lug.*

Offset Arm Front

ZX75US-5A

Offset Control Pedal

Pedal (2) is located at the operator's right foot.

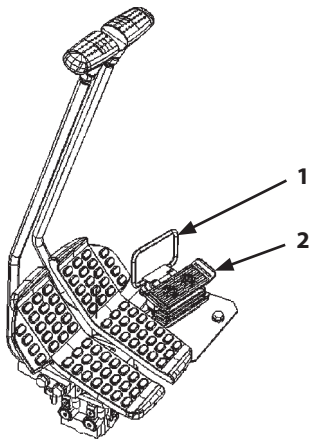

M1P1-13-007

Offset Operation

1. Turn cover (1) forward to unlock pedal (2).
2. Push down on the left side of pedal (2) to move the arm to the left offset position.
3. Push down on the right side of pedal (2) to move the arm to the right offset position.
4. Turn cover (1) backward to lock pedal (2) when the arm offset operation is no longer required.

The center position of the arm (offset 0) can be confirmed by consulting the gauge at the top end of the boom.

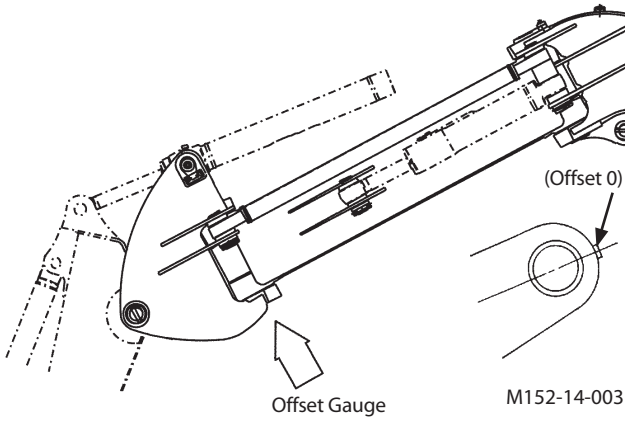

M152-14-003

Offset Direction and Working Range

Right and left offset directions are taken from the point of view of the operator. Accordingly, "left" offset means that the front attachment is moved towards the cab.

Maximum digging depth with maximum offset distance of 1150 (3'9") mm is A due to interference of the boom with the ground surface, as illustrated.

A : 3160 mm (10'4")

Working Range :

Offset distance can be selected up to a maximum distance of 1150 (3'9") mm for both right and left directions.

1. Maximum digging depth with maximum offset distance using 0.28 m^3 and 0.24 m^3 bucket is as shown in the illustration.
2. Distance L from the end surface of the crawler to the farthest end of the bucket will differ with the width of the bucket and track shoes as shown below.

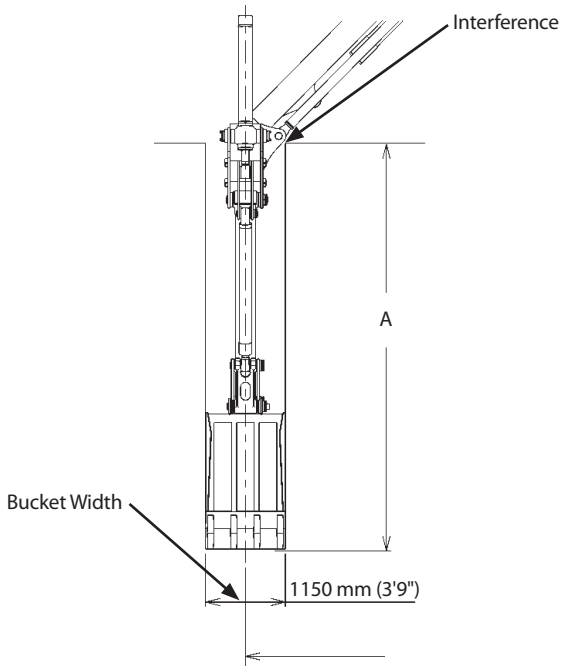

M1CD-12-006

Dimension L by width of Bucket and Shoe

Bucket		W: Shoe Width 450 mm (18")	W: Shoe Width 600 mm (20")
Capacity * m^3 (yd^3)	B: Width mm (in)	L: mm (in)	L: (mm)
0.11 (0.14)	450 (18")	25 (1.0")	-50 (-2.0")
0.24 (0.31)	650 (26")	125 (4.9")	50 (2.0")
0.28 (0.37)	750 (30")	175 (6.9")	100 (3.9")

* PCSA Heaped

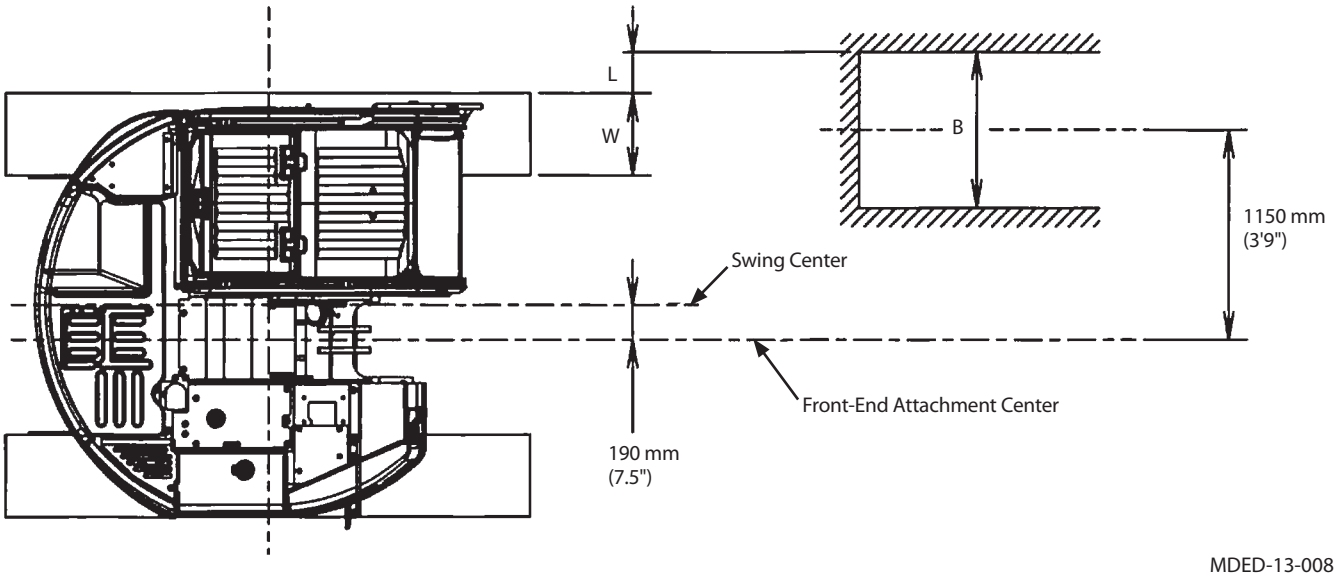

MDED-13-008

Precautions for Operating With the Offset Function

⚠ WARNING:

- **In case this machine is equipped with an unspecified attachment such as an oversized bucket or hydraulic breaker, the attachment may come in contact with the cab if the machine is operated with the front attachment offset, possibly causing injury or death as well as damaging the machine**
- **Never jack up the machine with the front in the offset position. This is extremely dangerous, as the machine is unstable.**

IMPORTANT: Do not perform heavy duty work, or dig gravel with the front in the offset position.

Do not perform tamping work with a slope-finishing bucket attached. These operation will damage the lower and upper booms.

1. When using unspecified attachments such as oversized buckets or hydraulic breaker, be sure the front attachment dimension does not exceed the specified dimension shown rightward.

   Use an attachment with the dimension between the arm top pin center to the tip end of the attachment 1060 mm or less.

2. When digging with the front in the offset position, the bucket will come in contact with the track link if the arm is crowded.
   Even if bucket does not touch the track link, watch for the bucket digging under the track, as this will cause instability.

3. Be sure to follow the precautions shown below.

   (1) Do not use the 2.12 m arm as it will interfere with the cab when in the offset position.

   (2) Do not use the bucket as a pile driver with the boom in the offset position.

   (3) When digging with the boom in offset position, be careful not to damage the cylinder stay.

   In order to prevent the offset pins from getting rusty, operate the offset function regularly. Check offset function operation every time before starting work.

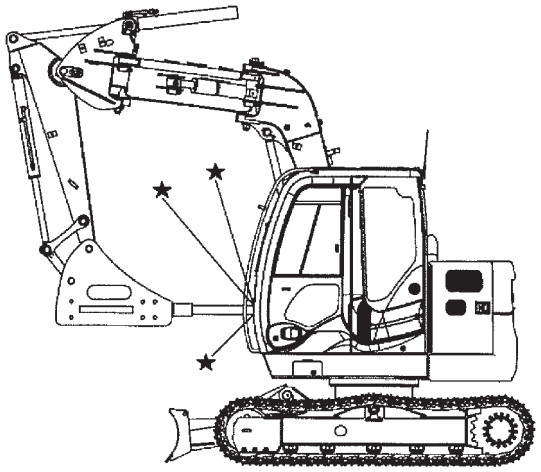

MDED-13-012

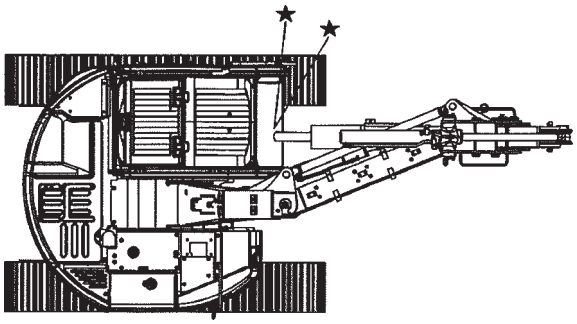

MDED-13-013

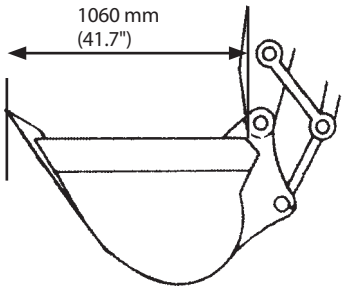

M1CD-13-003

Maintenance (Offset Arm Front)

Refer to the Greasing Front Joint Pins pages in the MAINTENANCE section.

Boom Foot, Boom Cylinder Bottom Side, Arm Cylinder Rod Side, and Bucket Cylinder Bottom Side Pins:

Refer to the Greasing Front Joint Pins pages in the MAINTENANCE section.

Offset Front Attachment Joint Pins
--- every 50 hours

Add greasing to all illustrated grease fittings.

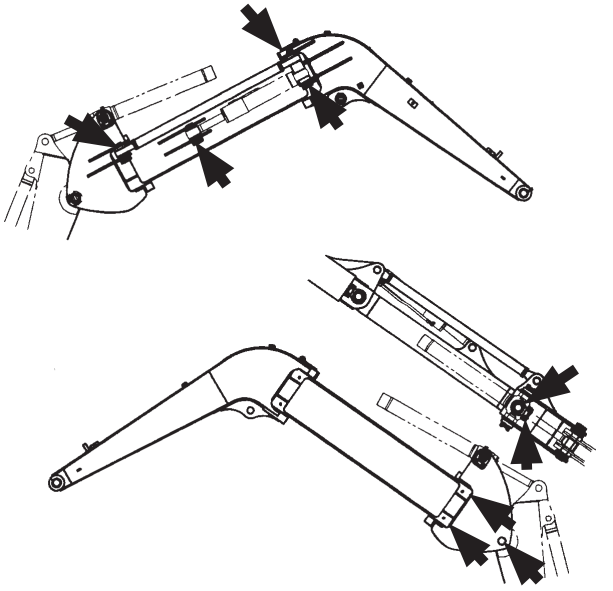

M152-07-049

Retightening EX Pin.

The EX pin is tightened with a screw. The pin will unavoidably become loose due to permanent set of the parts fastened with the screw during initial operation. Be sure to retighten the pin once within the first 5 to 20 hours after starting operation to the same tightening torque as specified.

Cylinder Stay and Upper Boom Joint Pin (1)
Tool : 55 mm
Torque : 1050 N•m (105 kgf•m, 770 lbf•ft)
Upper Boom and Lower Boom Joint Pin (2)
Tool : 55 mm
Torque : 1050 N•m (105 kgf•m, 770 lbf•ft)
Boom Cylinder Bottom Side and Frame Joint Pin (3)
Tool : 36 mm
Torque : 450 N•m (45 kgf•m, 330 lbf•ft)

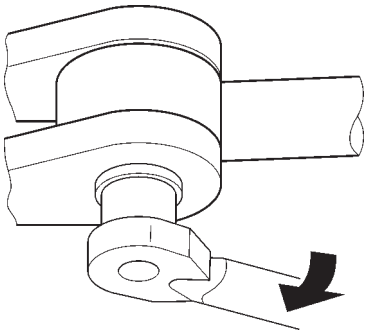

EX Pin for Front M1CC-13-019

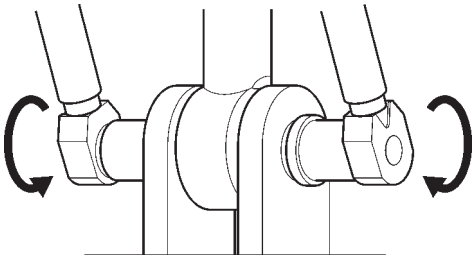

EX Pin for Boom Cylinder M1CC-13-020

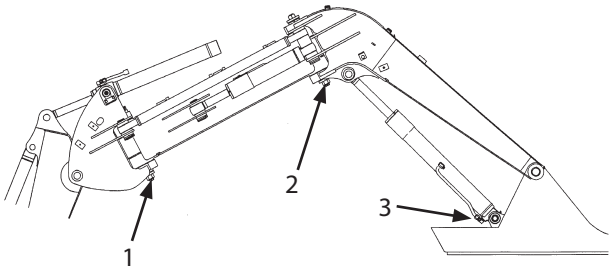

M1CC-13-021

Specifications ZX75US-5A (with Offset Arm Front)

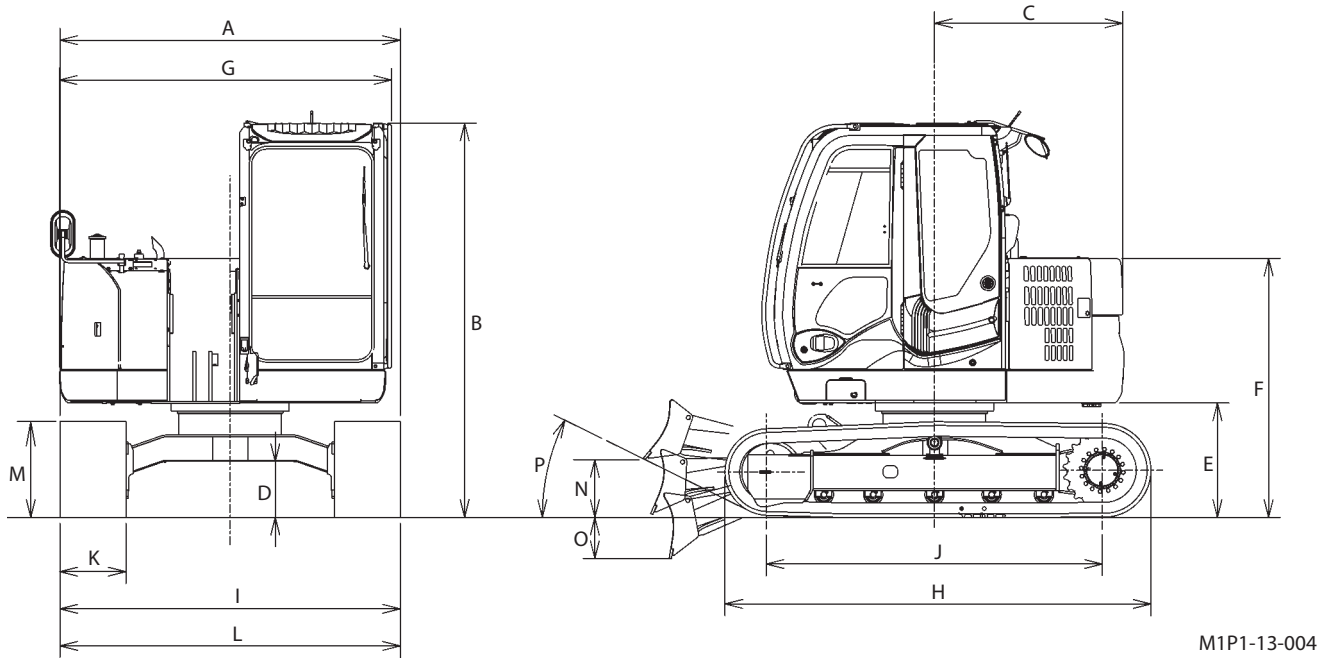

M1P1-13-004

Model	ZX75US-5A	
	Without Blade	With Blade
Front-End Attachment	Offset Boom 1.62 m (5 ft 4 in) Arm	
Bucket Capacity (Heaped)	PCSA 0.28 m^3, CECE 0.24 m^3	
Operating Weight	7700 kg (17000 lb)	8270 kg (18300 lb)
Base Machine Weight	6060 kg (13400 lb)	6630 kg (14700 lb)
Engine	4TNV94L 34.1 kW/2000 min^{-1} (45.7 HP/2000 rpm)	
A: Overall Width (Excluding Rearview Mirrors)	2320 mm (7 ft 7 in)	
B: Cab Height	2690 mm (8 ft 10 in)	
C: Rear End Swing Radius	1290 mm (4 ft 3 in)	
D: Minimum Ground Clearance	* 360 mm (1 ft 2 in)	
E: Counterweight Clearance	* 740 mm (2 ft 5 in)	
F: Engine Cover Height	* 1830 mm (6 ft 0 in)	
G: Overall Width of Upperstructure	2260 mm (7 ft 5 in)	
H: Undercarriage Length	2920 mm (9 ft 7 in)	
I: Undercarriage Width	2320 mm (7 ft 7 in)	
J: Sprocket Center to Idle Center	2290 mm (7 ft 6 in)	
K: Track Shoe Width	450 mm (1 ft 6 in)	
L: Blade Width	-	2320 mm (7 ft 7 in)
M: Blade Height	-	460 mm (1 ft 6 in)
N: Blade Bottom Highest Position (above ground level)	-	* 360 mm (1 ft 2 in)
O: Blade Bottom Lowest Position (below ground level)	-	* 300 mm (1 ft 0 in)
P: Maximum Approach Angle	-	26.8 degree
Ground Pressure	34 kPa (0.34 kgf/cm^2, 4.8 psi)	36 kPa (0.37 kgf/cm^2, 5.2 psi)
Offset Distance	0 to 1150 mm (0 to 3 ft 9 in)	
Swing Speed	10.5 min^{-1} (rpm)	
Travel Speed	5.0/3.1 km/h (3.1/1.9 mph)	
Gradeability	35 degree (70 %)	

*NOTE: * The dimensions do not include the height of the shoe lug.*

Working Ranges ZX75US-5A (with Offset Arm Front)

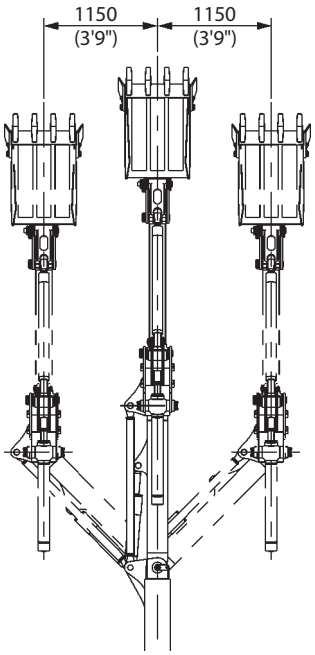

M1CC-12-010

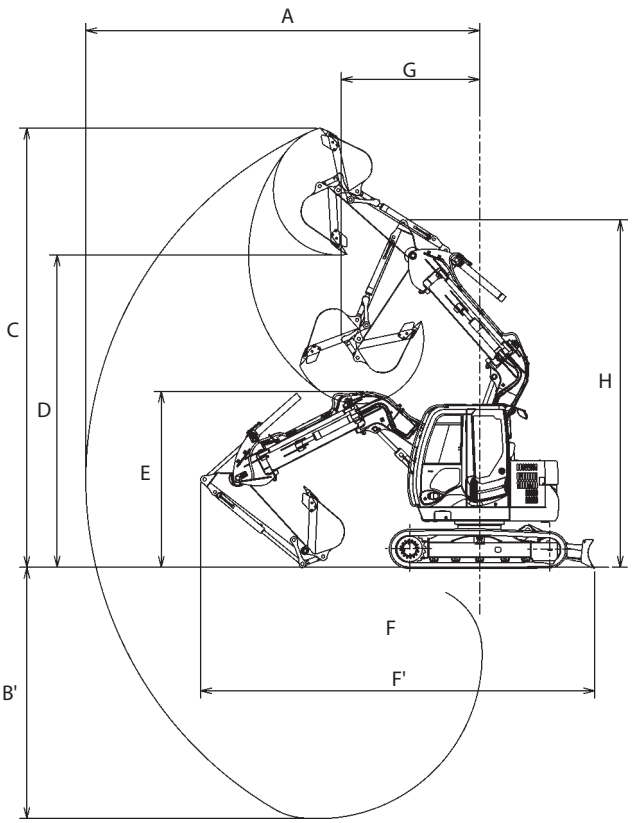

M1P1-13-014

Item \ Category	Working Ranges			
	Off-set Distance (0 mm)		Max. Off-set Distance (1150 mm (3'9"))	
	mm	ft·in	mm	ft·in
A: Maximum Digging Reach	6430	21'1"	5980	19'7"
B: Maximum Digging Depth	4110	13'6"	3650	12'0"
C: Maximum Cutting Height	7190	23'7"	6830	22'5"
D: Maximum Dumping Height	5110	16'9"	4750	15'7"
E: Overall Height	2870	9'5"	2820	9'3"
F: Overall Length (Without Blade)	6040	19'10"	5620	18'5"
F': Overall Length (With Blade)	6440	21'2"	6020	19'9"
G: Minimum Swing Radius	2260	7'5"	L: 2230 R: 2430	L: 7'4" R: 8'0"
H: Front-End Attachment Height at Min. Swing Radius.	5680	18'8"	5330	17'6"

NOTE: "E: Overall Height" includes the height of shoe lug; Other dimensions do not include the height of the shoe lug.

Shoe Types and Applications ZX75US-5A (with Offset Arm Front)

0.28 m³ (0.37 yd3) Bucket Without Blade

Shoe Width		450 mm (18") Grouser Shoe	600 mm (24") Grouser Shoe	450 mm (18") Flat Shoe	450 mm (18") Pad Crawler Shoe	450 mm (18") Rubber Pad Shoe
Application		For Ordinary Ground (Standard)	For Weak Footing (Option)	For Paved Road (Option)	For Paved Road (Option)	For Paved Road (Option)
Operating Weight	kg (lb)	7700 (17000)	7880 (17400)	7880 (17400)	7750 (17100)	7720 (17100)
Base Machine Weight	kg (lb)	6060 (13400)	6240 (13800)	6240 (13800)	6110 (13500)	6080 (13500)
Cab Height	mm (ft·in)	2690 (8'10")	2690 (8'10")	2700 (8'10")	2720 (8'11")	2700 (8'10")
Minimum Ground Clearance	mm (ft·in)	* 360 (1'2")	* 360 (1'2")	390 (1'3")	410 (1'4")	390 (1'3")
Undercarriage Length	mm (ft·in)	2920 (9'7")	2920 (9'7")	2940 (9'8")	2970 (9'9")	2940 (9'8")
Undercarriage Width	mm (ft·in)	2320 (7'7")	2470 (8'1")	2320 (7'7")	2320 (7'7")	2320 (7'7")
Ground Pressure		33 kPa (0.34 kgf/cm², 4.8 psi)	26 kPa (0.27 kgf/cm², 3.8 psi)	34 kPa (0.35 kgf/cm², 4.9 psi)	33 kPa (0.34 kgf/cm², 4.8 psi)	33 kPa (0.34 kgf/cm², 4.8 psi)

NOTE:

- *600 mm (24 in) grouser shoe, 450 mm (18 in) flat shoe, 450 mm (18 in) pad crawler shoe and 450 mm (18 in) rubber pad shoe should not be used on gravel or rocky ground.*
- ** The dimensions do not include the height of the shoe lug.*

0.28 m³ (0.37 yd3) Bucket With Blade

Shoe Width		450 mm (18") Grouser Shoe	600 mm (24") Grouser Shoe	450 mm (18") Pad Crawler Shoe	450 mm (18") Rubber Crawler Shoe
Application		For Ordinary Ground (Standard)	For Weak Footing (Option)	For Paved Road (Option)	For Paved Road (Option)
Operating Weight	kg (lb)	8270 (18300)	8450 (18700)	8320 (18400)	8290 (18300)
Base Machine Weight	kg (lb)	6630 (14700)	6810 (15100)	6680 (14800)	6650 (14700)
Cab Height	mm (ft·in)	2690 (8'10")	2690 (8'10")	2720 (8'11")	2700 (8'10")
Minimum Ground Clearance	mm (ft·in)	* 360 (1'2")	* 360 (1'2")	410 (1'4")	390 (1'3")
Undercarriage Length	mm (ft·in)	2920 (9'7")	2920 (9'7")	2980 (9'9")	2940 (9'8")
Undercarriage Width	mm (ft·in)	2320 (7'7")	2470 (8'1")	2320 (7'7")	2320 (7'7")
Ground Pressure		36 kPa (0.37 kgf/cm², 5.2 psi)	28 kPa (0.29 kgf/cm², 4.1 psi)	36 kPa (0.37 kgf/cm², 5.2 psi)	36 kPa (0.37 kgf/cm², 5.2 psi)

NOTE:

- *600 mm (24 in) grouser shoe, 450 mm (18 in) flat shoe, 450 mm (18 in) pad crawler shoe and 450 mm (18 in) rubber pad shoe should not be used on gravel or rocky ground.*
- ** The dimensions do not include the height of the shoe lug.*

INDEX

A

Acting Time Setting 1-33
Actual operation 1-58
Adjust Bucket Linkage 7-71
Adjust the Operator's Seat S-6
Adjusting Operator's Seat 1-108
Adjusting Operator's Seat (Optional) 1-110
Adjusting Procedures 1-112
Adjusting Seat Height 1-110
Air Bleeding Procedures 7-36
Air Cleaner 7-53
Air Conditioner 1-21
Air Conditioner ON/OFF 1-21
Alarm Occurrence Screen 1-15
AM/FM Radio Operation 1-93
AM/FM Selector/Tuning Switch (Radio) 1-68
Angle Adjustment of Seat Surface 1-111
Armrest Adjustment 1-111
Armrest Adjustment (ZX75US-5A) 1-109
Attachment 13-14
Attachment Connection Parts 13-16
Attachment Operation (Optional) 1-54
Attachment Pedal (Hydraulic Breaker) (Optional) 13-4
Attachment Pedal (Hydraulic Crusher) Std. Model (Optional) 13-10
Audio Input (Optional) 1-97
Auto Air Conditioner 1-85
Auto Shut-Down 1-32, 5-8
Auto Shut-Down: ON/OFF 1-32
AUTO/OFF Switch/Fan Switch (Air Conditioner) 1-67
Auto-Idle 5-6
Auto-Idle Switch 1-69
Avoid Abusive Operation 5-16
Avoid Applying Heat to Lines Containing Flammable Fluids S-34
Avoid Driving Bucket Teeth into Ground 5-15
Avoid Hammer Work 5-15
Avoid Heating Near Pressurized Fluid Lines S-34
Avoid High-Pressure Fluids S-29
Avoid Hitting Blade with Front-End Attachment 5-17
Avoid Injury from Back-Over and Swing Accidents S-17
Avoid Injury from Rollaway Accidents S-16
Avoid Power Lines S-21
Avoid Side Load the Bucket 5-16
Avoid Tipping S-19
Avoid Undercutting S-19

B

BREAK-IN 2-1
Backrest Adjustment 1-109, 1-111
Basic Screen 1-7
Batteries 7-60
Before Starting Engine 3-2
Beware of Asbestos and Silicon Dust and Other Contamination S-35
Beware of Exhaust Fumes S-32
Blade Joint Pins 7-21
Blade Lever 5-3
Breaking in New Machine 2-1
Brightness Adjustment 1-40

C

Cab Door Release Lever 1-98
Cab Features 1-3
ZX75US-5A 1-3
ZX85USB-5A 1-4
Cab Heater Operation 1-89
Cab Light Switch 1-80
Change Bucket 7-69
Change Coolant 7-58
Change Engine Oil 7-24
Change Hydraulic Oil 7-34
Change Hydraulic Oil and Replace Full-Flow Filter Element 7-30, 13-9
Check Air Conditioner 7-80
Check and Adjust Fan Belt Tension 7-57
Check and Replace Bucket Teeth 7-67
Check and Replace Seat Belt 7-72
Check Coolant Level 7-56
Check Crankcase Breather 7-83
Check Electrolyte Specific Gravity 7-63
Check Fuel Hoses 7-52
Check Fuel Injection Timing 7-83
Check Gas Damper 7-84
Check Hoses and Lines 7-41
Check Hydraulic Oil Level 7-32
Check Instruments After Starting Engine 3-7
Check Starter and Alternator 7-83
Check the Hour Meter Regularly 7-3
Check Track Sag 7-74
Check Water Separator 7-48
Check Windshield Fluid Level 7-73
Check/Clean/Function Check Injection Nozzle 7-83
Cigar Lighter 1-79
Circulation Air Mode 1-21
Clean Air Cleaner Outer Element 7-53
Clean Air Conditioner Condenser 7-59
Clean and Replace Air Conditioner Filter 7-77
Clean Cab Floor 7-82
Clean Oil Cooler and Radiator and Front Screen 7-59
Clean Radiator/Oil Cooler/Core 7-59
Clock 1-11
Components Name 1-1, 1-86
Confirm Direction of Machine to Be Driven S-13
Console and Seat Fore-aft Adjustment (ZX75US-5A) 1-108, 1-110
Console Height Adjustment 1-112
Control Lever (HITACHI) 13-18
Control Lever (ISO Pattern) 5-1
Controller Part Name and Function 1-87
Controls on the Radio 1-93
Convert Bucket Connection Into Face Shovel 7-70
Cool Head/Warm Foot Operation 1-91
Coolant Temperature Gauge 1-12

Cooling Operation 1-90
Cooling System 7-55
Correct Maintenance and Inspection Procedures 7-1

D

DRIVING THE MACHINE 4-1
Date Adjustment 1-28
Date and Time 1-26
Default Setting 1-6
Defroster Operation 1-91
Dig with Caution S-20
Display Item Selection (Rear View Camera OFF) 1-47
Display Mode Setting 1-30
Displaying Basic Screen 1-8
Dispose of Waste Properly S-37
Do Not Use Wide Track Shoes on Rough Ground. 5-18
Drain Fuel Tank Sump 7-47
Drain Hydraulic Tank Sump 7-33
Drive Machine Safely S-14

E

Electrical Control Main Switch (Optional) 1-75
Electrical Control Switch (Optional) 1-77
Electrical System 7-60
Electrolyte Level Check 7-62
Emergency Boom Lowering Procedure 5-22
Emergency Exit 1-106
Engine 7-22
Engine Auto-Stop in Extremely Low Temperature 3-11
Engine Control Dial 1-68
Engine Oil Level 7-22
Engine Speed Control 5-5
Engine Stop Switch 1-83
Ensure Safety Before Rising from or Leaving Operator's Seat S-7
Evacuating in Case of Fire S-32
Extending Password Duration Time 1-14

F

Fasten Your Seat Belt S-7
Fastening Machine for Transporting 6-5
Features 1-85
Follow Safety Instructions S-2
For Rapid Cooling 1-92
Fore-Aft Position Adjustment of Seat Surface 1-111
Front Joint Pins 7-17
Fuel Gauge 1-11
Fuel System 7-45
Fuse Box 1-84
Fuse Box A 1-84
Fuse Box B 1-84
Fuse Box C 1-84

G

GETTING ON/OFF THE MACHINE 1-2
General Precautions for Cab S-5
Grading Operation 5-14
Greasing 7-17

H

Handle Chemical Products Safely S-37
Handle Fluids Safely–Avoid Fires S-23
Hood and Access Covers 7-8
Horn Switch 1-76
Hour Meter 1-11
How to Use Screens 1-8
Hydraulic Breaker, Hydraulic Crusher and Quick Coupler 13-1
Hydraulic System 7-28

I

IInformation Menu 1-51
Input Password 1-13
Inspect and Adjust Valve Clearance 7-83
Inspect Machine S-4
Inspect Machine Daily Before Starting 3-1
Inspection and Maintenance of Hydraulic Equipment 7-28
Install OPG Guard S-12
Installation and Adjustment of Mirrors 1-113
Installing Fire Extinguisher (Optional) 1-81
Investigate Job Site Beforehand S-11

J

Jump Starting S-9

K

Keep Person Clear from Working Area S-18
Keep Riders off Machine S-9
Key Switch 1-76
Kind of Oils 7-14

L

Language Settings 1-42
Layout 7-4
Lifting 5-20
Lifting Machine 6-7
Lists of Display Language 1-44
Loading/Unloading on a Trailer 6-2

M

MACHINE NUMBERS 1
Machine Operation Hours 1-52
Mail (Optional) 1-23
Main Menu 1-20
Main Menu Sequence Change 1-49
Maintenance 1-60, 7-1
Maintenance (Offset Arm Front) 13-25
Maintenance Guide 7-9
Maintenance Guide Table 7-5
Maintenance Under Special Environmental Conditions 9-1
Measure Engine Compression Pressure 7-83
Miscellaneous 7-67
Monitoring 1-64
Move and Operate Machine Safely S-8
Multi Function Monitor 1-5

N

Never Position Bucket Over Anyone S-18
Never Ride Attachment S-38
Never Undercut a High Bank S-20
Notes on Protection of Operator's Station
When the Machine Rolls Over S-41
Numeric Keypad 1-72

O

OPERATING THE ENGINE 3-1
OPERATING THE MACHINE 5-1
OPERATOR'S STATION 1-3
OTHER ATTACHMENTS AND DEVICES 13-1
Object Handling S-22
Off-Season Air Conditioner Maintenance 1-92
Offset Arm Front 13-22
ZX75US-5A 13-22
Offset Control Pedal 13-22
Offset Direction and Working Range 13-23
Offset Operation 13-22
Opening Side Windows 1-103
Opening Upper Front Window 1-100
Opening/Closing and Removing Cab Inside Window 1-99
Opening/Closing Overhead Window
(Clear Hatch: If Equipped) 1-105
Opening/Closing Overhead Window (Std. Model) 1-104
Operate Only from Operator's Seat S-8
Operate with Caution S-20
Operating Backhoe 5-12
Operating in Water or Mud 4-9
Operating Status Icon Display 1-12
Operation 1-52
Overhead Window Wiper and Washer Switch
(ZX75US-5A) (Optional) 1-72
Overload Alarm Switch (Optional) 1-74

P

Park Machine Safely S-23
Parking the Machine 4-11
Parking the Machine on Slopes 4-11
Password Change (Optional) 1-34
Periodic Replacement of Parts 7-13
Pilot Accumulator Functions 5-21
Pilot Control Shut-Off Lever 1-82, 5-2
Pipings for Breaker and Crusher 13-2
Power Mode 5-11
Power Mode Switch 1-70
Power Switch/Volume Control Knob (Radio) 1-68
Practice Safe Maintenance S-25
Precaution for Arm Roll-In/Bucket Roll-In
Combined Operation 13-17
Precaution for Communication Terminal Equipment S-39
Precautions for After Operations 5-25
Precautions for Breaker Operation 13-5
Precautions for Communication Terminal S-38
Precautions for Crusher Operation 13-11
Precautions for Handling Accumulator and
Gas Damper S-34
Precautions for handling antifreeze 7-55
Precautions for Lightning S-21
Precautions for Operating With the Offset Function 13-24
Precautions for Operations S-10
Precautions for Traveling on Slopes 4-10
Precautions for Welding and Grinding S-33
Preparations for Inspection and Maintenance 7-7
Prepare for Emergencies S-3
Prevent Battery Explosions S-36
Prevent Burns S-28
Prevent Fires S-30
Prevent Parts from Flying S-27
Protect Against Flying Debris S-22
Protect Against Noise S-4
Provide Signals for Jobs Involving Multiple Machines S-13

R

Radio 1-22
Raise One Track Using Boom and Arm 4-7
Rear Light Switch (Optional) 1-74
Rear View Camera Monitor 1-38
Rear View Camera ON/OFF 1-38
Recognize Safety Information S-1
Recommended Fuel 7-45
Refueling 7-46
Remedy 1-17
Remove Paint Before Welding or Heating S-35
Remove Travel Levers 7-72
Removing and Storing Lower Front Window 1-102
Replace Air Breather Element 7-40
Replace Air Cleaner Outer and Inner Elements 7-53
Replace Batteries 7-64
Replace Engine Oil Filter 7-24
Replace Fuel Main Filter Element 7-50
Replace Fuel Pre-Filter Element 7-51
Replace Pilot Oil Filter 7-38
Replace Rubber Hoses Periodically S-29
Replace Swing Drain Filter 7-39
Replacement of Full-Flow Filter 7-37
Replacing Fuses 7-65
Restriction of Attachment Installation S-13
Retighten Cylinder Head Bolt 7-83
Return to Basic Screen (Monitor) 1-67
Return to Previous Screen (Monitor) 1-67
Revolving Light Switch (Optional) 1-75

S

SAFETY S-1
SAFETY SIGNS S-42
SPECIFICATIONS 12-1
STORAGE 10-1
Seat Belt 1-114
Seat Fore-Aft Adjustment 1-108, 1-110
Seat Heater Switch 1-75
Seat Height and Angle Adjustment 1-108

Secondary Relief Pressure Adjustment 13-3
Security Functions (Optional) 1-13
Select/Confirm Switch (Monitor) 1-67
Service Air Conditioning System Safely S-36
Setting Menu 1-25
Shackle Hole Usage 5-19
Shoe Types and Applications ZX75US-5A 12-3
Shoe Types and Applications ZX75US-5A (with Blade) 13-21
Shoe Types and Applications ZX75US-5A (with Offset Arm Front) 13-28
Shoe Types and Applications ZX85USB-5A 12-6
Shovel 5-13
Specifications ZX75US-5A 12-1
Specifications ZX75US-5A (with Blade) 13-19
Specifications ZX75US-5A (with Offset Arm Front) 13-26
Specifications ZX85USB-5A 12-4
Starting the Engine 3-3
Station Auto-Presetting Procedure 1-95
Station Presetting Procedure 1-94
Stay Clear of Moving Parts S-27
Stopping the Engine 3-10
Store Attachments Safely S-28
Storing the Machine 10-1
Suction Filter Cleaning 7-34
Support Machine Properly S-26
Suspension Adjustment 1-108, 1-111
Swing Alarm Deactivation Switch (Optional) 1-74
Swing Bearing 7-19
Swing Internal Gear 7-20
Switch Panel 1-66
Switch Panel (for Optional Equipment) 1-73

T

TRANSPORTING 6-1
Temperature Control Switch/Mode Switch (Air Conditioner) 1-67
Tightening and Retightening Torque of Nuts and Bolts 7-84
Time Adjustment 1-26
Time Remains and Maintenance Interval 1-62
Tips for Optimal Air Conditioner Usage 1-92
TONE Control 1-96
Towing Machine 4-8
Transmission 7-26
Transport Safely S-24
Transporting by Road 6-1
Travel Alarm (Optional) 4-4
Travel Alarm Deactivation Switch (Optional) 1-74
Travel Levers and Pedals 4-1
Travel Mode Switch 1-69, 4-3
Travel Operation 1-56
Travel Reduction Gear 7-26
Traveling 4-5
Traveling on Soft Ground 4-6
Troubleshooting 11-1
Tuning Procedure 1-93

U

Understand Signal Words S-1
Unit Selection 1-45
Unloading 6-6
Use Handholds and Steps S-6
Using Booster Batteries 3-8
Using Cigar Lighter 1-79
Using Cigar Lighter Port as External Power Source 1-79

W

Warming Up Operation 5-4
Warn Others of Service Work S-26
Wear Protective Clothing S-3
When Windows Become Clouded 1-92
Wiper/Washer Switch 1-71
Work Light Switch 1-70
Working Ranges ZX75US-5A 12-2
Working Ranges ZX75US-5A (with Blade) 13-20
Working Ranges ZX75US-5A (with Offset Arm Front) 13-27
Working Ranges ZX85USB-5A 12-5