Graver Technologies

Technical Brief

TB-004

Backwashing of Microfiltration Cartridge Elements

A number of applications either lend themselves to backwash processes, such as catalyst recovery, or require backwash to achieve process economics, such as those in beer and wine bottling. Simply put, backwashing is the process used to clean filters by reversing the flow through a cartridge element in order to remove accumulated particles and extend filter life and/or reduce operational costs. The success of the backwash process will vary greatly as no two processes, contaminants or systems are alike and will depend upon the characteristics of the filter being used as well as some specific particle characteristics. Each system and application will require the parameters to be tailored by trial and error.

Most microfiltration cartridges are not designed for backwashing since they are built for flow in the forward direction and in many cases, the media has an asymmetric structure in order to maximize dirt holding capacity. As such, this complicates the ability of these filters to be effectively recovered by a backwash process. Since many cartridges come with outer cages filters will tolerate reverse flow, although the maximum reverse pressure differential will be lower than the maximum forward flow differential pressure.

For backwashing to be most effective:

- Carefully choose the media grade to ensure that the bulk of the contaminant stays on the surface versus penetrating the depth of the media
- Choose a single layered media rather than a multiple layered or graded density media.
- Backwashing will be more effective if the contaminant is hard/non-deformable. Deformable particles tend to embed in the media and may be difficult to remove
- Contaminant loading should be low, ideally in ppb levels.
- Narrow particle size distributions are preferable to wide range of particle sizes.

Modify Existing System

Most filtration systems are typically not designed for backwashing. Existing filter hardware (Fig. A) can be modified to provide an economical solution to allow for backwashing (Fig. B) by adding:

- Inlet tee (with drain valve)
- Outlet tee (with backflush drain valve)
- Hold down plate (if not provided)
- Backwash valve and fluid source, or ideally a reservoir that utilizes a filtered air source to backflush.

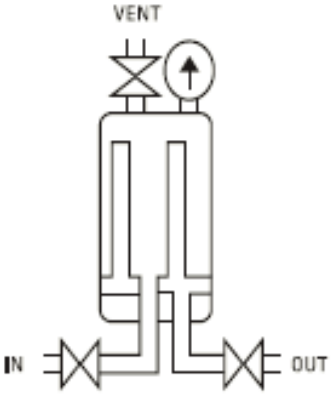

Fig. A

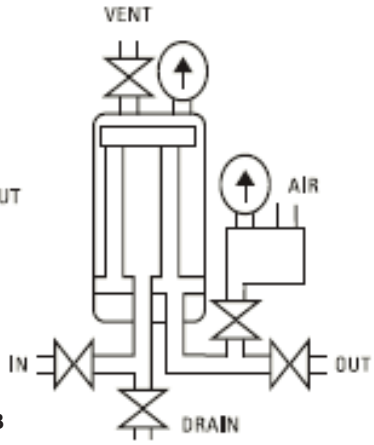

Fig. B

Designing a New System

If the opportunity exists to design the system from the beginning, there are a few strategies that can be incorporated to maximize the potential for success. The ideal design (Fig. C) would include:

- Conical shaped filter housing for efficient draining
- Filter hanging to maximize drop-off of contaminant
- Air reservoir to allow delivery of backwash fluid.

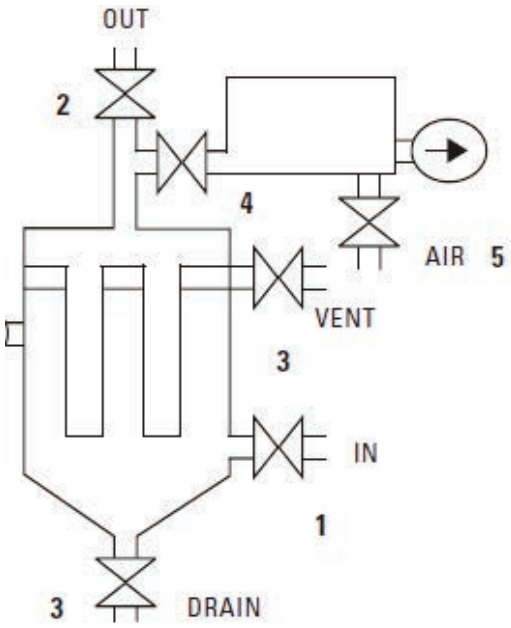

Fig. C

Typical Backwash Procedure

This procedure is one scenario that can be considered for backwashing a filter. In order to have a successful cartridge backwash process, the liquid flux needs to be controlled. This procedure is written for single 10 inch long elements in the filter housing. For longer elements or multi-round housings, please consult Graver. For applications where process fluid flow cannot be interrupted, it is recommended to install two filter housings in parallel so one can be online while the other is in backwash mode.

- Check to make sure that there is a minimum of a 12 inch long pipe run on the downstream side of the housing, prior to the T joint that leads to valves 3 and 4. This pipe will function as a water reservoir to promote an effective pneumatic-hydraulic pulsating backwash method.
- Please refer to Figure D and note the valve positions prior to initiating backwash.
  - V1 and V3 are in open position. V2 and V4 are in closed position.
  - Air pressure regulator R1 needs to be set at 5 to 6 psig.
  - The R1 regulator is needed to regulate air flow rate. The rate of air brought into the housing should match the amount escaping through V2 or the filter will balloon up from inside-out, damaging the filter integrity. It is recommended to start the backwash at lower pressure and only increase pressure after thoroughly inspecting and evaluating the effectiveness of the backwash. Do not exceed 6 psig back pressure.
  - It is optional to introduce a valve at the housing head's vent port.
- To initiate backwash, close/open the following valves in the indicated sequence:
  - Open V2 (let all the liquid drain prior to initiating backpressure, open vent if necessary)
  - Close vent
  - Close V3
  - Close V1
  - Open and close V4 to create a pulsing effect with the compressed air.
- To return to normal process flow, follow the indicated sequence:
  - Close V4.
  - Open V3.
  - Open V1. Let the liquid flow flush out the contaminant through the drain.
  - Close V2.

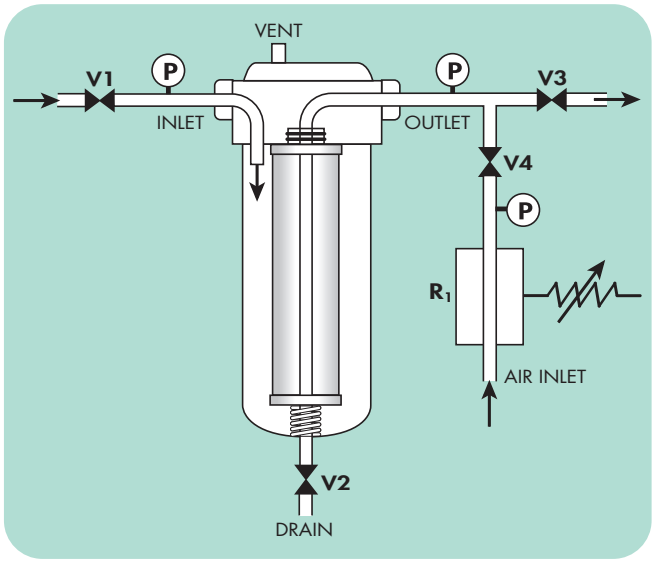

Fig. D

Recommended Backwash Parameters:

- Pressure Differential for Backwash Initiation – 5 to 8 psid (over clean pressure differential). Cartridge reverse differential limitations must be considered, and further reduced if temperatures above ambient are utilized. Avoid plugging filter completely or backflushing may be ineffective.
- Air Reservoir Pressure – No more than 35 psig.
- Backwash Rate – 1.5 to 2.0 times forward flow rate are ideal if pressure allows.
- Backwash Valve Open Rate (Trial and Error) – Pulsing improves effectiveness.
- Backwash Time – Sufficient to remove all upstream fluid volume. May need to repeat several times for maximum recovery.
- Backwash/Cleaning - Backwash with the addition of a cleaning chemical may further improve the recovery.
- Record the cartridge clean pressure drop across the filter housing at 10 liter per minute flow rate. Initiate the backwash when the pressure drop across the filter housing is no more than four times the initial delta pressure.
- Due to the varied nature of contaminants and processes, developing the ideal methodology for the backwash process will require a trial and error approach.

The choice of the fluid to use in the backwash may vary depending upon the application. In some instances, it may be feasible or necessary to utilize water as the backwash fluid if it does not introduce additional issues into the process (compatibility with process fluid or dilution effects when restarting, for instance) or if the process fluid is of great value or creates hazardous waste issues. In this case, it will be necessary to filter the water to a level equal to or better than the filtration rating on the process filter to avoid having the backwash fluid plug the filter. The simplest method would be to use a small volume of the filtered process fluid, thus eliminating the introduction of another fluid type as well as the need for additional filtration. At some point, the cartridge will become irreversibly plugged. As a general guideline, if the starting pressure after backwash is 2x of the clean differential or the time between backwash cycles is reduced by 50% or more, then the filter should be replaced or removed in order to attempt additional chemical cleaning. For applications where process fluid flow cannot be interrupted, it is recommended to install two filter housings in parallel so one can be online while the other is in backwash mode.