SALES@ALLIEDMAKER.COM (212) 334-7333 81 FRANKLIN ST. NYC HANDCRAFTED IN USA

Aperture Double

ALLIED MAKER

WAC-043

MATERIALS

Brass, Glass

METAL FINISHES

Available in All Standard Metal Finishes

GLASS FINISHES

Opal, Skytek

MOUNTING HARDWARE DIAGRAM

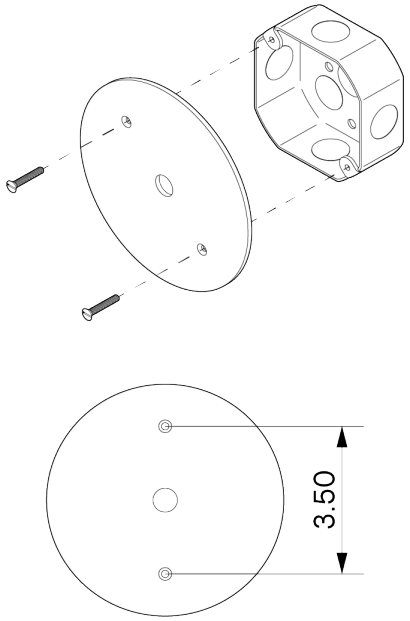

LAMPING

E12 or E14 Screw Base. Type G50 Lamps

BULB INCLUDED (120V USA)

Tala 5W Globe Bulb

BULB INCLUDED (240V EU)

Tala 5W Globe 240V Bulb

LAMP QUANTITY

2

BRIGHTNESS

550 Lumens

DIMMING

LED+

DIMENSIONAL DRAWING

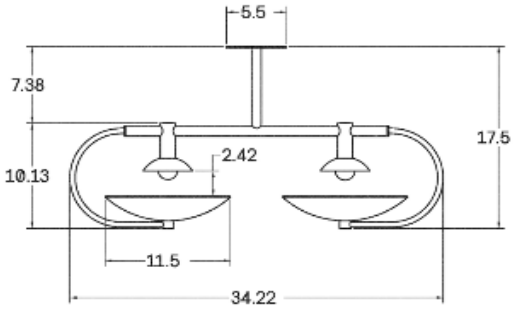

MOUNTING

Universal

WEIGHT

10.5 lb

CERTIFICATIONS

CE, Damp Locations, UL and cUL Certified