Click 222 System Surge

INSTALLATION QUICK START GUIDE

The Click 222 prevents electrical surges conducted along underground cables from damaging the cabinet equipment. For more information about this product, visit wavetronix.com.

1 Mount the device

The Click 222 mounts over a T-bus for power and communication:

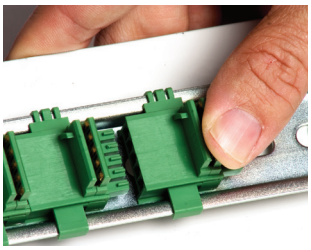

1. If the Click 222 was shipped with the T-bus connector attached, remove the connector from the module.
2. Snap the connector onto the DIN rail by positioning it over the rail with the male connector pointing to the right. Hook one arm over the edge of the DIN rail and press down on the other arm until it snaps into place.
3. Connect the T-bus connector to the rest of the T-bus by sliding them together until you hear them snap into place.
4. Mount the Click 222 onto the DIN rail: position it properly over the T-bus connector, hook the lip over the lower edge of the DIN rail, and use a rocking motion to snap the module into place.
5. If you are using multiple Click 222 devices, follow steps 1–4 to mount them next to the first device.

2 Wire earth ground

All Click 222 devices must be grounded. To ground the device:

1. Connect a grounding wire (14 AWG) from one of the screw terminals marked PE (protective earth) to a grounded location—for instance, to a lug bolt, if there is one on the cabinet for grounding, or to an earth ground terminal block.
2. Connect another grounding wire from there to earth ground.

For additional security, ground the DIN rail that the Click 222 is mounted on:

1. Connect the grounding wire from the DIN rail to a grounded location—for instance, if there is a lug bolt on the cabinet for grounding, or to an earth ground terminal block.
2. Connect another grounding wire from the chosen location to earth ground.

3 Wire the screw terminals

The Click 222 is designed for use with a SmartSensor Matrix and SmartSensor 6-conductor cable; the steps to install this way are listed below. If you don't intend to use the Matrix or the 6-conductor cable, skip these steps and wire RS-485 and power according to the labels on the terminals.

1. Wire the cable from sensor 1 as shown on the next page: the orange wires to 485A, the blue wires to 485C, the red wire to DC+, the black to DC-, and the drain to PE.
2. If you're using a second sensor, repeat step 1 with the sensor 2 cable and the 485B and 485D terminals. As there is only one each of the DC terminals, they will both have two wires.

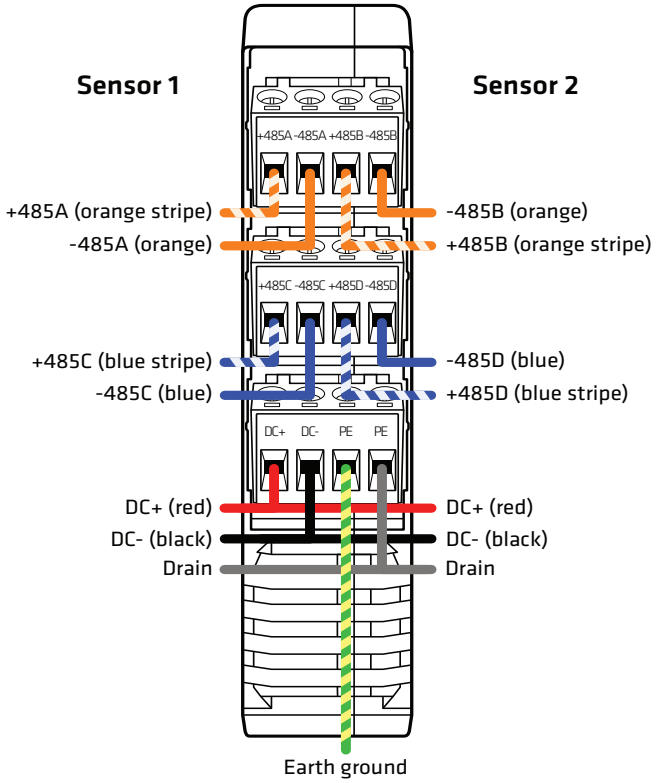

Note. Underground cable runs are susceptible to surges, making it necessary to have surge protection on both ends of the cable. If you are using the SmartSensor Matrix, protection is available through the sensor itself, so you just need surge protection, like the Click 222, on the non-sensor end of the cable. If you are using another sensor, though, you will need to use a Click 222 on both ends of the cable: one in the main traffic cabinet and one in a pole-mount box near the sensor.

4 Connect to the RJ-11 jacks

The Click 222 has three RJ-11 jacks, located on the faceplate:

- **RS-485 A –** This jack is tied to the 485A screw terminals. Connect it via a jumper cable to a contact closure card to receive contact closure information from sensor 1.
- **RS-485 B –** This jack is tied to the 485B screw terminals. Connect it via a jumper cable to a contact closure card to receive contact closure information from sensor 2.
- **RS-485 bridge –** This jack is tied to the 485C and 485D screw terminals, the T-bus, and the control bridge, which electrically isolates the RS-485 buses for more reliable communications. This jack is commonly used for the communications necessary to configure the contact closure cards. If you want to configure these cards by computer, connect this jack via a jumper cable to the first rack card to be configured, then daisy-chain all the cards together.