SmartSensor Matrix

SPAN WIRE MOUNT INSTALLATION QUICK START GUIDE

The SmartSensor Matrix can be installed in two ways:

- On a pole or mast arm, using the SmartSensor mount.
- On two vertically aligned span wires, using the SmartSensor span wire mount. The intersection must conform to certain requirements; see the knowledge base article called *Using the Span Wire Mount with the SmartSensor Matrix* for more information.

This document will cover installations using the span wire mount. For the regular mount, see the *SmartSensor Matrix Quick Start Guide*.

1 Choose a mounting offset

Note. The mounting location for your sensor(s) should have already been determined as part of the design process. If it has not been, please consult the *SmartSensor Matrix User Guide* for complete design and installation guidelines.

Use the table at right to choose a suitable offset (distance from the first lane of interest), based on the height of the span wires you'll be mounting on.

Offset	Height
6–15 ft	12–25 ft
15–50 ft	15–25 ft
> 50 ft	25–60 ft

2 Mount the sensor

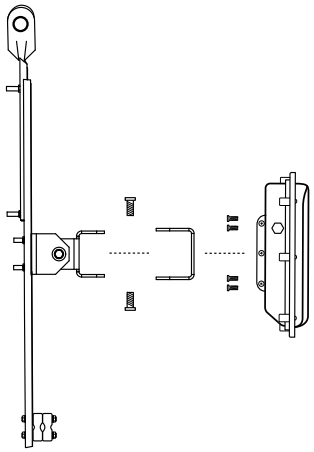

1. Prepare the sensor while still on the ground: remove the large bolts holding the end knuckle (the one with four holes) to the mount, then use the four small bolts and lock washers to attach the removed knuckle to the sensor backplate.
2. Secure a span wire hanger assembly, namely the PELCO SP-1050-FL-L-SP0003 or SP-2045-FL-L, to the top and bottom span wire. If the hanger assembly is too long for the location and part of it hangs below the span wire, we recommend that you cut off the excess. If the hanger assembly is too short for the location, switch to a hanger assembly with a longer extension bar.
3. Use the 5/16 bolts that were included with the Pelco hanger assembly to attach the rest of the span wire mount to the hanger assembly (the knuckle with six holes is the one that attaches to the span wire assembly). It's recommended that you put the mount roughly in the middle of the extension bar, for stability.
4. Attach the knuckle/sensor you prepared earlier to the mount using the large bolts (the cable connector should be pointed down). Don't tighten completely yet, as you still need to align the sensor to the roadway.

3 Align the sensor to the roadway

1. Tilt the sensor down so it is aimed at the center of the lanes of interest.
2. Adjust the side-to-side angle so that the sensor's 90º field of view covers the approach.

Note. Make sure the front edge of the sensor's footprint covers beyond the stop bar. This allows you to detect vehicles that do not stop at or behind the stop bar.

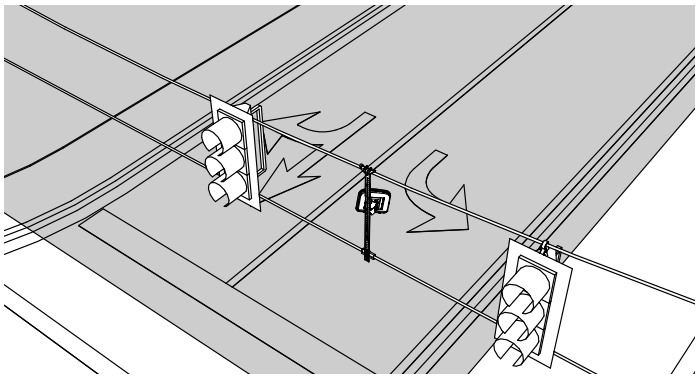

4 Attach the cable and ground the sensor

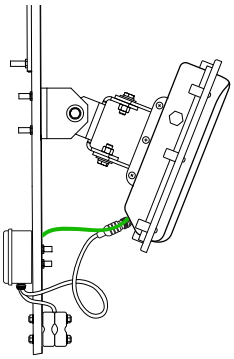

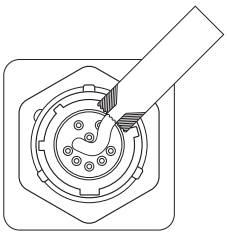

1. Tear the tab off the tube of silicon dielectric compound that came with the sensor.
2. Squeeze about half of the compound on the connector at the base of the sensor.
3. Insert the cable connector into the sensor connector. Be aware it's a keyed connector.
4. Twist the cable connector clockwise until you hear it click into place.
5. Mount a junction box to the span wire hanger assembly.
6. Run the cable to the junction box and terminate it in the terminal blocks there. Leave a small amount of slack in the cable; this reduces strain, allows you to create a drip loop as shown, and gives you something to work with should you need to move the sensor in the future.
7. Run the homerun cable from the junction box to the pole—it's recommended you run it along the messenger (lower) span wire—and from there to the traffic cabinet.
8. Connect a 12 AWG grounding wire between the grounding lug on the bottom of the sensor and the span wire hanger assembly.

5 Install cabinet equipment

1. Place the Click 65x on a cabinet shelf or mount it to the side of the cabinet.
2. Connect the sensor cable to the Click 65x. (If there are multiple sensors at the intersection, the 65x can accept multiple cables.)
3. Make sure each switch by the sensor port is turned on and the LED is illuminated.
4. If your cabinet is SDLC compatible, connect a cable from the SDLC bus on the Click 65x to the controller. If your cabinet isn't SDLC compatible, you can connect from the sensor port RJ-11 jacks to contact closure cards and communicate with the controller that way.

6 Configure the Click 65x

The Click 65x is designed to be communicated with over Ethernet. Before you can connect it to your network, you need to set the static IP address, subnet mask and default gateway (these numbers should be determined by your IT personnel).

1. Use the arrow keys and screen on the faceplate to navigate the OLED menu.
2. On the main screen, navigate down to Network Setup and press the **Accept** (green check mark) button to open the networking screen (shown at right).
3. Set your desired IP address by following these steps: use the left and right arrow keys to highlight a number, then use the up and down arrow keys to change that number. Then move to the next number. Repeat until all the numbers are changed.
4. Press the right key one last time to navigate down to the subnet mask line.
5. Repeat steps 2 and 3 for the subnet mask and default gateway.
6. When you're done with all three, push the check sign button to confirm your changes.

After you're done, connect an Ethernet cable to the RJ-45 jack on the faceplate of the device to connect your Click 65x to your network.

7 Check alignment in the SmartSensor Manager Matrix software

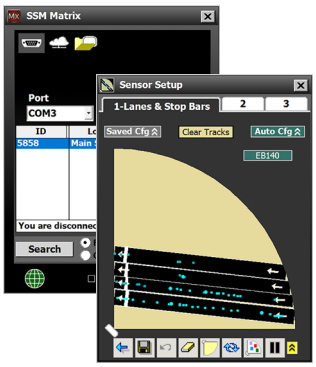

1. Click **Communication** on the main screen and then click the cloud icon at the top of the screen.
2. Under Network Address, enter the IP address and port number of the Click 65x.
3. Click **Search**. The first time you connect, use a **Full** search, which will find all the Matrix sensors on the selected RS-485 control bus. A **Quick** search can be used for any subsequent connections.
4. Once the list of sensors appears, click on the sensor you would like to configure; click **Connect**.
5. On the main menu, click **Sensor Setup**. The screen that opens shows vehicle detections as moving blue dots, called trackers. If the trackers match traffic on the road, the sensor is working properly.

Note. For configuration instructions, see the *SmartSensor Matrix User Guide*.