ZOE

Matte Black (10.201.122.176)

TECHNICAL SPECIFICATIONS

Style	Pull-Out Spray and Light
Tap Swivel Spout (Degrees)	270° or 120°
Spout Reach	215mm
Fastening By	M33 x 1.5 threaded sleeve
Cut-Out Size	ø35mm
WELS Rating	5 star / 6 LPM
WELS Registration	T25606
Min (PSI), Max (PSI)	7.25 / 72.5
Min (kPa), Max (kPa)	50kPa / 500kPa
Finish	Matte Black
Warranty	5 years parts and labour 15 years cartridge only Terms and conditions apply

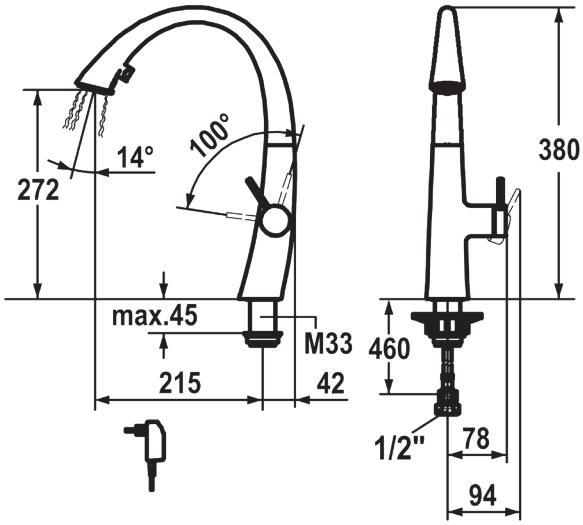

KWC
Swiss Water Experience

LAST UPDATED 21 SEP 2020

The more stars the more water efficient
WATER RATING
www.waterrating.gov.au
6.0 litres per minute
In accordance with AS/NZS 6400
License No. 0190
Franke Water Systems AG, KWC

T25606