MD254 C

Modular Belt Series

- **Meat (Beef and Pork) Applications**
  Fat - Trim Lines, General Conveyence, Packing Lines, Elevator
- **Poultry Applications**
  Debonning, Trim Lines, Offal - Feather Lines, Grading Lines, Freezing Lines, Elevator
- **Seafood Applications**
  Inspection Tables, Grading Lines, Trim Lines
- **Bakery Applications**
  Row Dough Handling, Cooling Lines, Packing Lines
- **Snack Food Applications**
  Corn Processing
- **Fruits and Vegetables Applications**
  Bulk Feeding, Elevator, Control - Sorting Table
- **Automotive Applications**
  Car Part Manufacturing
- **Tire Manufacturing Applications**
  Mixer Infeed - Outfeed, Calendering Infeed, Extrusion Outfeed
- **Packaging Applications**
  Labelling, Case Packers, Tray Packers, Palletizing - Depallettizing
- **Corrugated Cardbord Applications**
  Down Stracker, Corrugator Take Off, Strap Feed
- **Printing and Paper Applications**
  Printing Machine Outfeed, Wrapping Machine Outfeed
- **Beverages and Botteling Applications**
  Can Palletizing and Depalletizing, Glass Palletizing and Depalletizing, Pet Palletizing and Depalletizing
- **Material Handling Applications**
  Incline Applications, Palletizers, Packaging Lines

BELTSERVICE CORPORATION
314-344-8500 | 800-727-2358

MD254 C

Pitch:	25.4 mm
Belt Surface:	Close, smooth surface
Minimum Width:	50 mm
Open Area (%):	%0
Flight:	Yes (T25,T50,TC50, T75,T100)
Sidewall:	Yes (h=25,h=50 mm)
Rod:	Ø4.9 mm
Approved:	FDA and EU
Curve:	No
Color:	Additional colors available
Cleanability:	Good
Belt Thickness:	10 mm

Product Features and Functional Benefits

- Belt provides optimal open area for drainage and airflow.
- Less friction and product contact for easy cooking, cooling and freezing of products.
- Reduced dirt and oxide build due to self cleaning surface.
- Stainless steel pins option for high temperature applications.
- Easy to clean reduces downtime for cleaning time %70.
- Stainless steel pins option reduce belt elongation for high temperature application.

MD254 C / Technical Information

BELT MATERIAL	BELT STRENGTH				TEMPERATURE		BELT WEIGHT
	Straight		Curve		C (min.)	C (max.)	Kg/m²
	Kg/m	N/m	Kg/m	N/m			
Polypropylene	1580	15800	-	-	+5	+90	5.20
Polyethylene	1240	12400	-	-	-73	+66	5.35
Acetal	1875	18750	-	-	-43	+110	8.00

- Belt strength and temperature values are maximum on the table.

MD254 C / Standard Belt Widths

BELT SERIES	WIDTH (W)				Belt With Tolerance (max.)
	PP-PE		POM		
	mm	inch	mm	inch	
MD254 C	200	7,87"	200	7,87"	± 1 mm
MD254 C	250	9,84"	250	9,84"	± 1 mm
MD254 C	300	11,81"	300	11,81"	± 2 mm
MD254 C	350	13,77"	350	13,77"	± 2 mm
MD254 C	400	15,75"	400	15,75"	± 2 mm
MD254 C	450	17,71"	450	17,71"	± 2 mm
MD254 C	500	19,69"	500	19,69"	± 2 mm
MD254 C	550	21,65"	550	21,65"	± 3 mm
MD254 C	600	23,62"	600	23,62"	± 3 mm
MD254 C	650	25,60"	650	25,60"	± 3 mm
MD254 C	700	27,56"	700	27,56"	± 3 mm
MD254 C	750	29,50"	750	29,50"	± 3 mm
MD254 C	800	31,50"	800	31,50"	± 3 mm
MD254 C	850	33,46"	850	33,46"	± 4 mm
MD254 C	900	35,43"	900	35,43"	± 4 mm

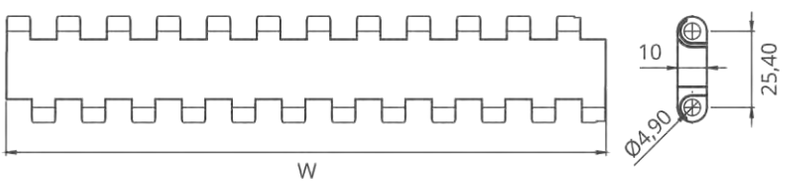

- Standard belt increments 50 mm.
- Non standard belt increments 16.6 mm.
- Please contact with customer service for precise belt measurements.

MD254 Series *Sprockets and Technical Specifications*

Z12

Z12

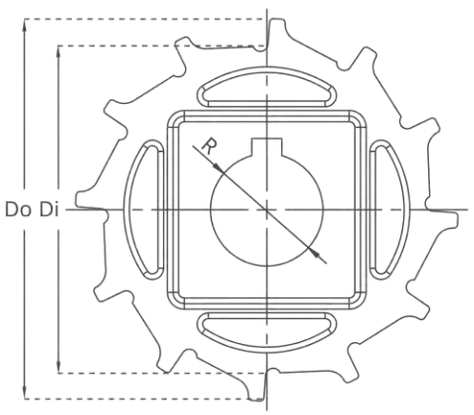

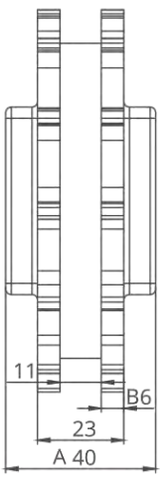

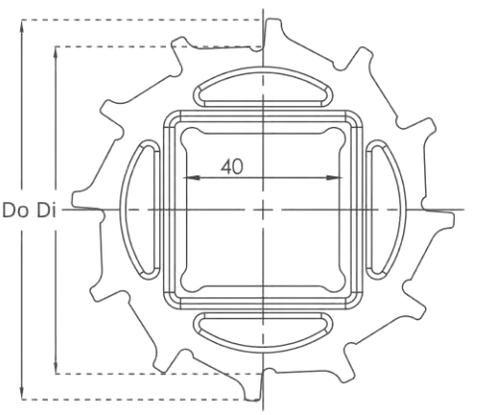

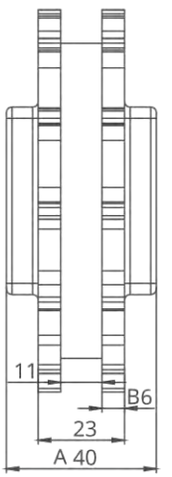

MD254 Series / Standard Sprockets Dimensions

NO.TEETH	Di	Do	B	A	Square Bore (Q)	Round Bore (R)	PRODUCT CODE	
							Square Type (Q)	Round Type (R)
Z8	53	67,75	6.0	40.0 mm	25.0 mm	25.0 / 30.0	MD-TR254SQ25Z8*PA	MD-TR254SRZ8*PA
Z10	70	85	6.0	40.0 mm	40.0 mm	25.0 / 30.0	MD-TR254SQZ10*PA	MD-TR254SRZ10*PA
Z12	87	102	6.0	40.0 mm	40.0 mm	25.0 / 30.0	MD-TR254SQZ12*PA	MD-TR254SRZ12*PA
Z15	112	126,5	6.0	40.0 mm	40.0 mm	25.0 / 30.0	MD-TR254SQZ15*PA	MD-TR254SRZ15*PA
Z18	137	152	6.0	40.0 mm	40.0 mm	25.0 / 30.0	MD-TR254SQZ18*PA	MD-TR254SRZ18*PA

*Other sprockets and hub sizes are manufactured up to request.
*POM (Acetal) and PP (Polypropylene) sprockets raw material is available on request.

Clamb

Machined Split Sprocket

Moulded Sprocket

Machined Sprocket

MD254 Series *Accessories and Technical Specifications*

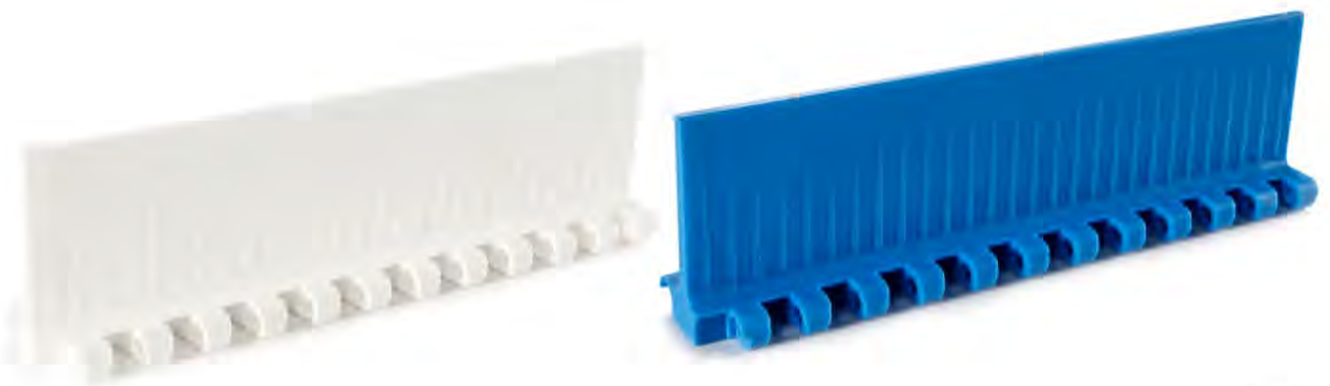

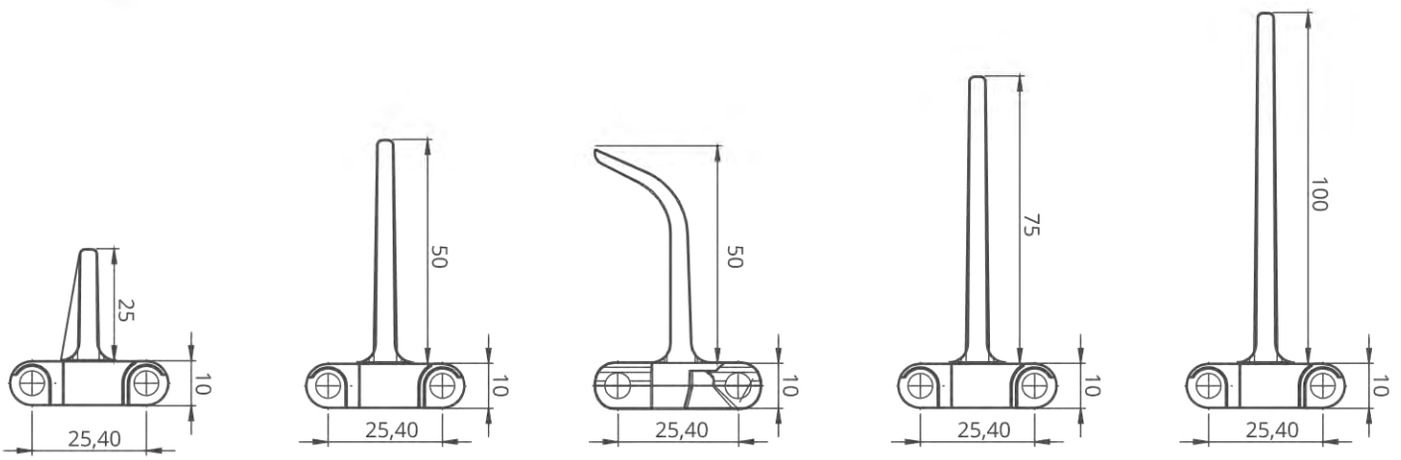

* Additional flight dimensions are available up to 100 mm.

MD254 Series / Flight Technical Specifications

Possible Flight Indets for 25,4 mm Series	Z	
	(mm)	(inch)
Standart, no module cutting	33,5	1,32
Standart, no module cutting	50	1,97
Standart, no module cutting	83,5	3,29
Standart, no module cutting	100	3,94

***Non-standard flight indent is on request.**

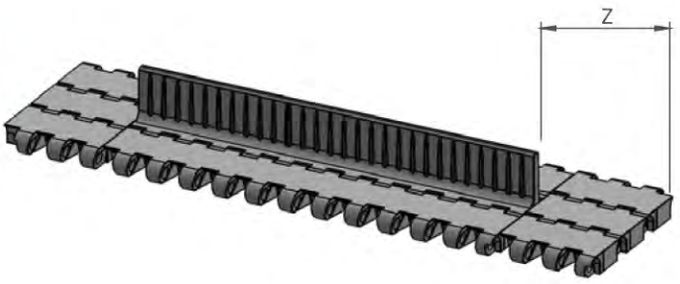

MD254 Series / Sidewall Technical Specifications

Possible Sidewall and Flight Indets	X		Y	
	(mm)	(inch)	(mm)	(inch)
Standart, no module cutting	24	0,94	15	0,59
Module cutting necessary for belt and flight	32	1,26	22	0,87
Standart, no module cutting	40	1,57	30	1,18
Module cutting necessary for belt and flight	48	1,89	37	1,46
Module cutting necessary for belt	56	2,20	45	1,77
Module cutting necessary for belt and flight	64	2,52	53	2,09
Standart, no module cutting	73	2,87	60	2,36
Module cutting necessary for belt and flight	81	3,19	68	2,68
Standart, no module cutting	90	3,54	75	2,95

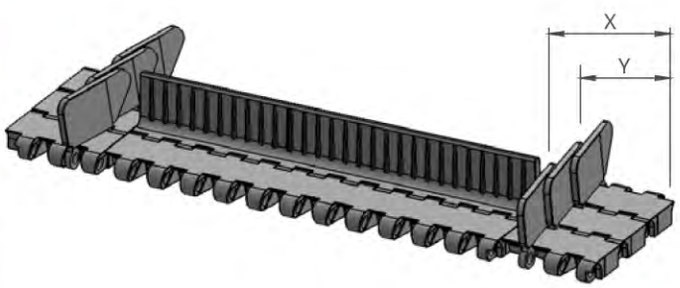

MD254 Series *Engineering Information*

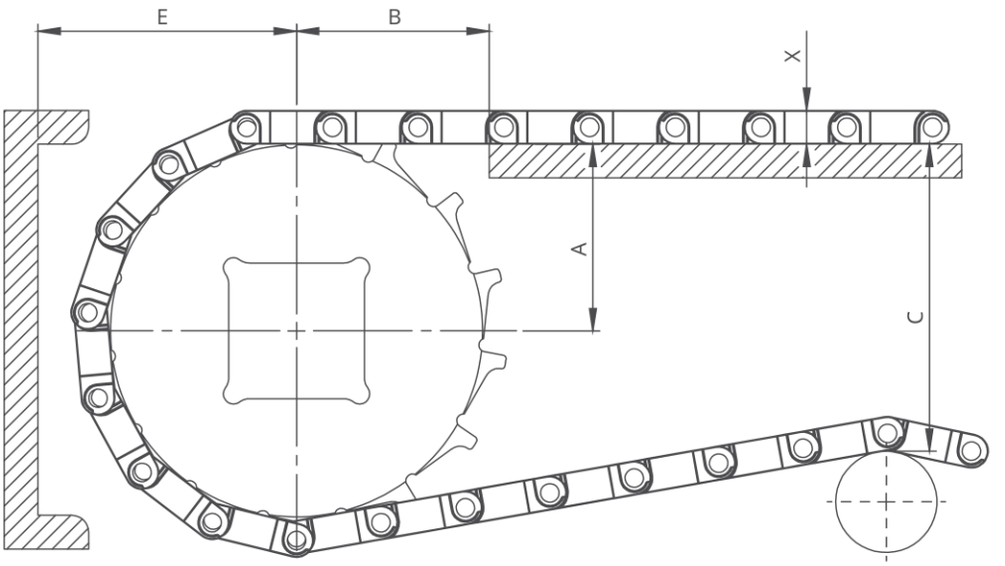

A - ± 0,031" (1mm)
B - ± 0,125" (3mm)
C - ± (Max.)
E - ± (Min.)

MD254 Series / Conveyor Frame Dimensions

Sprockets Description			A		B		C		E		X	
Pitch Diameter		No.Teeth	Range (Bottom to Top)		In.	mm	In.	mm	In.	mm	In.	mm
In.	mm		In.	mm								
MD254 FG, MD254 C												
2,44	62	8	1,14	29	1,61	41	1,97	50	2,05	52	0,51	13
2,87	73	10	1,43	36,25	1,85	47	2,54	64,5	2,33	59,25	0,51	13
3,82	97	12	1,77	45	2,03	51,5	3,39	86	2,68	68	0,51	13
4,72	120	15	2,22	56,5	2,24	57	3,94	100	3,13	79,5	0,51	13
5,79	147	18	2,70	68,5	2,36	60	5,04	128	3,60	91,5	0,51	13

MD254 Series / Slider Support System For Straight Running Belts

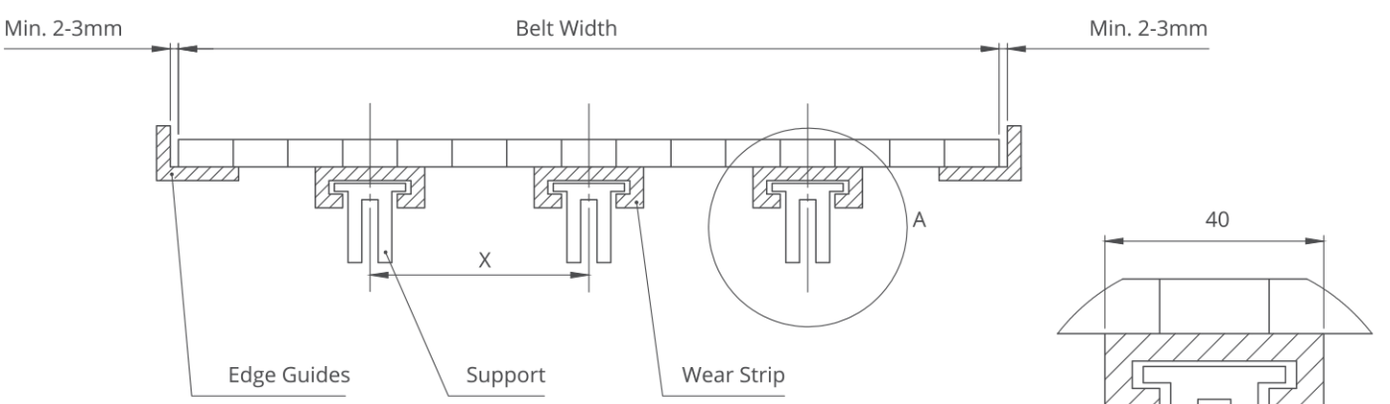

Detail A
Scale 1:1

Note: The max. distances between the wear strips have to be (X) ;

125 mm for 2" belts
80 mm for 1" / 0.5" belts

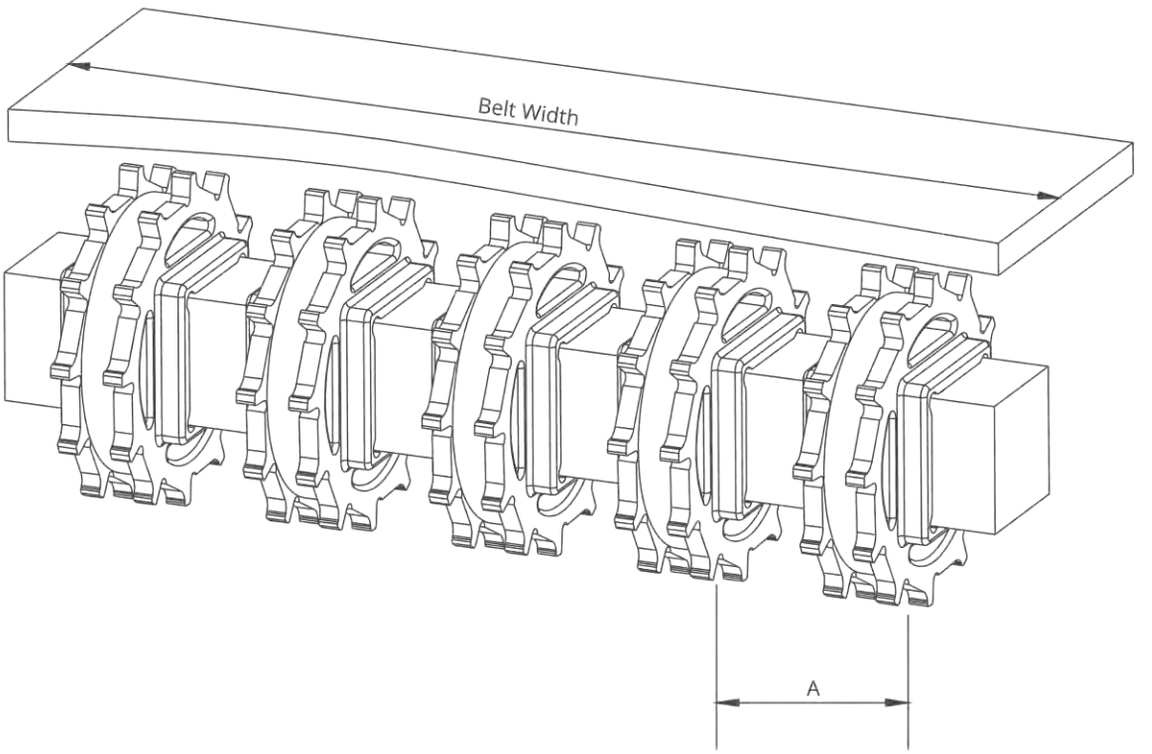

MD254 Series / Sprockets Arrangement

Standard Belt Width		Number of sprockets per shaft		A (mm/inch)	
mm	inch	Drive Shaft	Return Shaft	Min.	Max.
150	6	2	2	50/2	120/4,7
200	8	2	2	50/2	120/4,7
250	10	3	2	50/2	120/4,7
300	12	3	2	50/2	120/4,7
350	14	3	3	50/2	120/4,7
400	16	4	3	50/2	120/4,7
450	18	4	3	50/2	120/4,7
500	20	5	4	50/2	120/4,7
550	22	5	4	50/2	120/4,7
600	24	6	5	50/2	120/4,7
700	26	7	5	50/2	120/4,7
800	28	8	6	50/2	120/4,7
900	30	9	7	50/2	120/4,7
1000	32	10	7	50/2	120/4,7

Note: Number of sprockets depends on the belt load.