Board-Con Female Connector 180°, 2.00 x 2.00mm, 4 - 80 Position, 2 rows, 1 housing, housing height 6.35mm, DIP=2.2

PANCON CONNECTORS

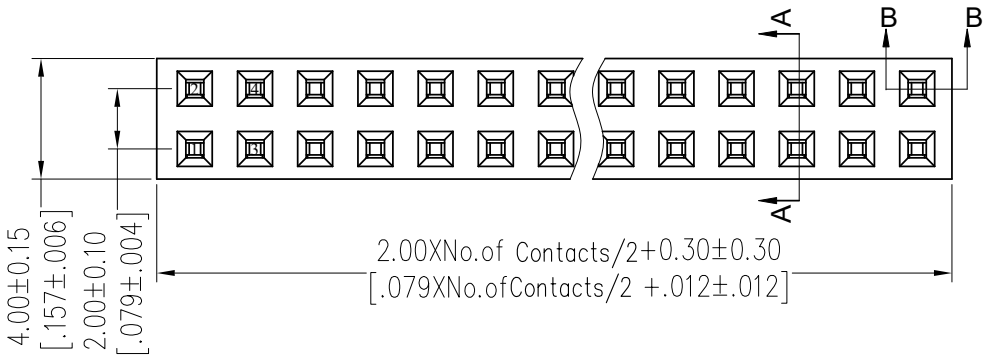

Recommended P.C.B Layout(Top Side)
(PCB BOARD TOLERANCE±0.05)

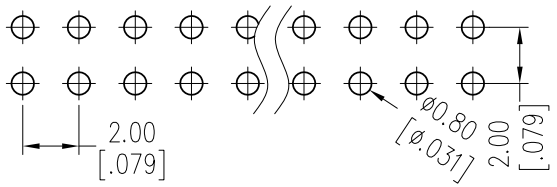

NOTES:
Current Rating: 2,00 Amp
Contact Resistance: 20mΩ max.
Withstand Voltage: 500V AC/DC
Insulation Resistance: 1000MΩ min.
Operation Temperature: -40°C to +105°C

Contact Material: Copper Alloy

OPERATION	
X.X	±0.40
X.XX	±0.25
X.XXX	±0.15
Angle	± 3°
DIM	TOL

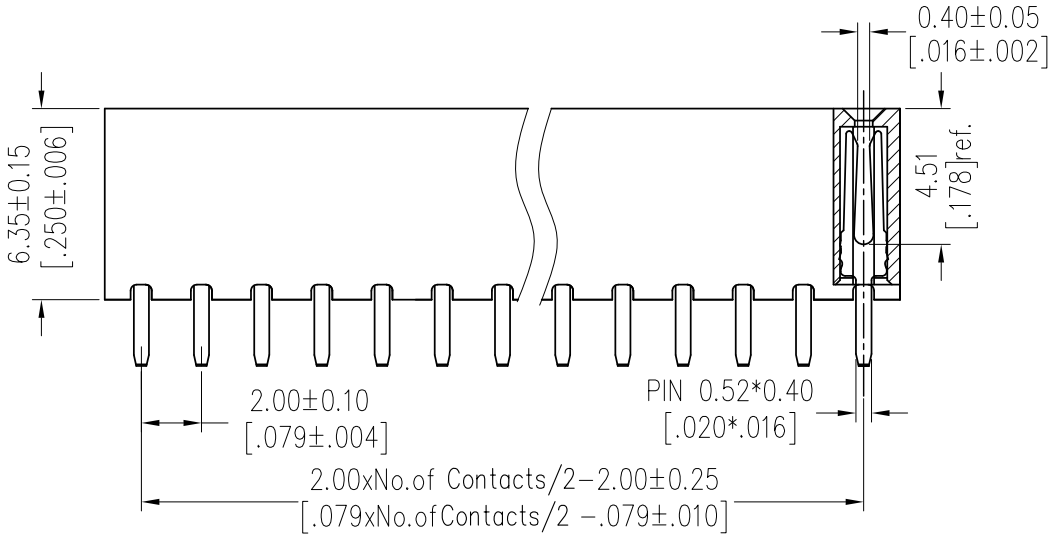

SECTION B-B

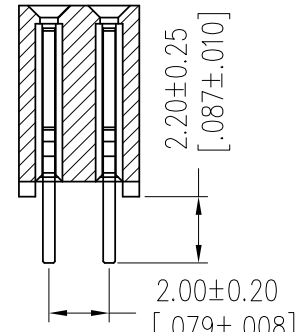

SECTION A-A

B0094-XXXXX

# of Contacts	Type	Plating	Material	Packaging
4 – 80		Gold Flash 10µ" Gold 15µ" Gold 30µ" Gold Gold Flash/Tin 10µ" Gold/Tin 15µ" Gold/Tin 30µ" Gold/Tin Tin Matte Tin	LCP	Tube

REV	DATE	NOTE	NAME
2	28.06.2022	Title revised	PER
1	23.05.2021	issued	NIL

Pancon GmbH, Kaiser-Friedrich-Promenade 4, 61348 Bad Homburg v. d. Höhe
Tel: +49 6172 9180157, www.pancon.de