Lat-Con, Series 033, 180° Male Header, SMT

PANCON CONNECTORS

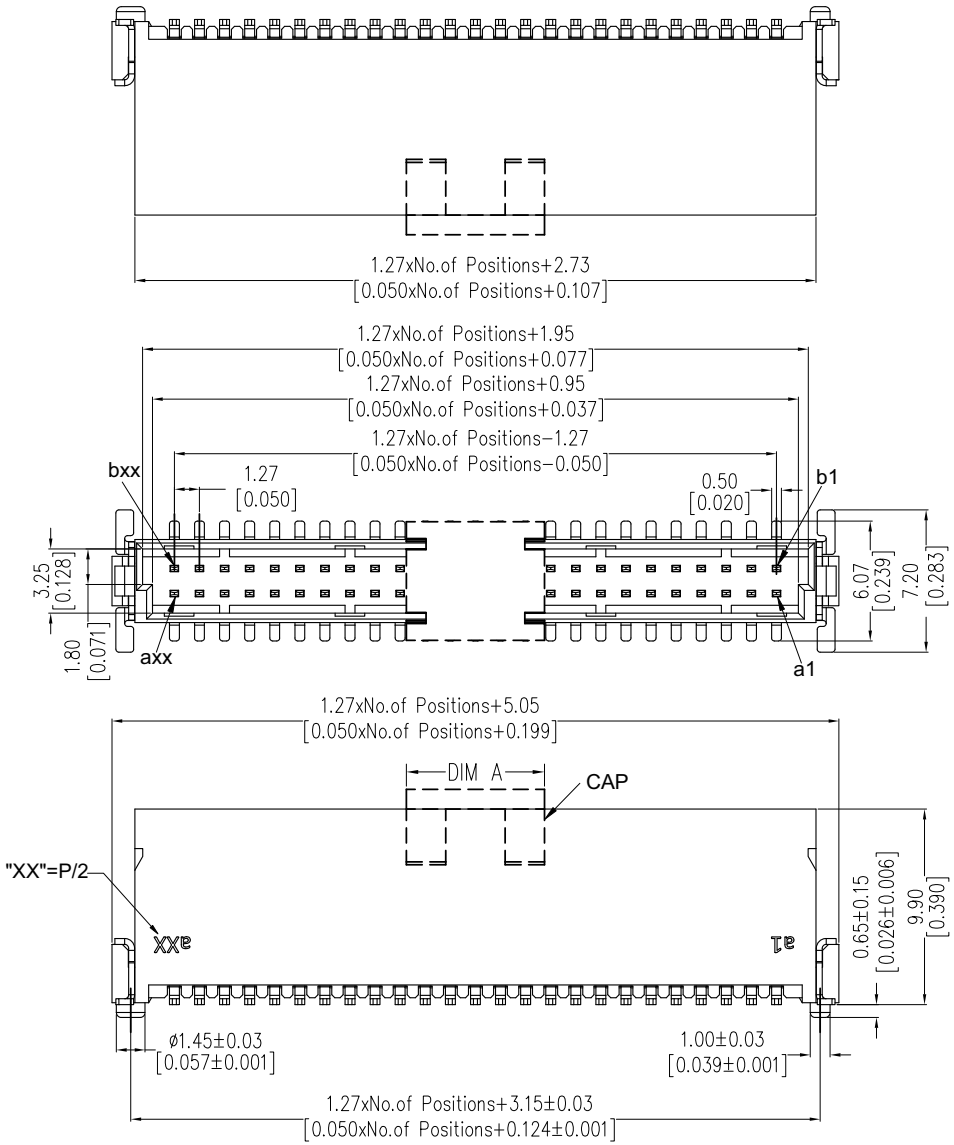

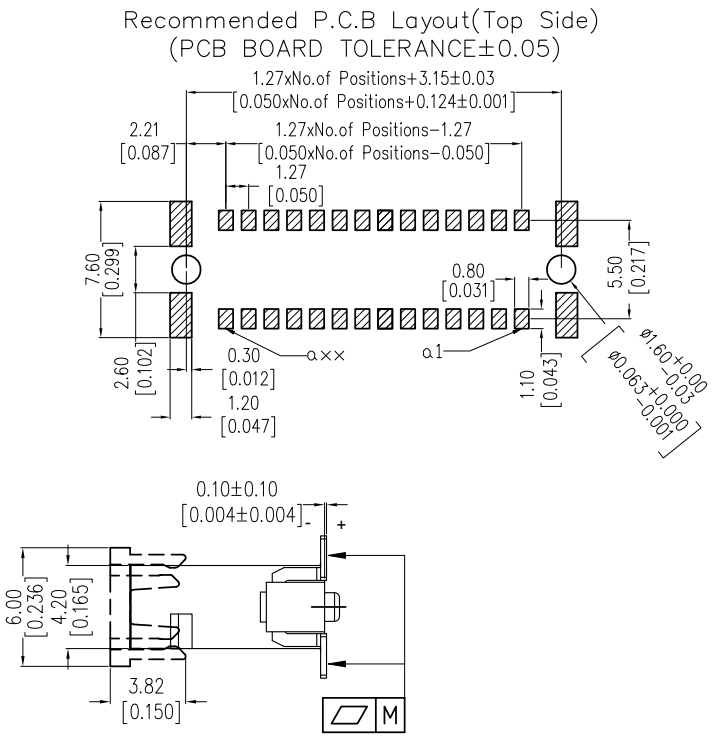

NOTES:
Current Rating: 0,5 - 1,0 AMP
Contact Resistance: 25mΩ max.
Withstand Voltage: 500V AC/DC
Insulation Resistance: 10000MΩ min.
Operation Temperature: -55°C to +125°C

Contact Material: Copper Alloy
Contact Plating: Au over Ni
Tail Plating: Sn over Ni
Insulator Material: High Temperature Thermoplastic (UL94 V-0)

Positions	DIM A	DIM M
10 - 20	7,00	0,12
26 - 40	16,00	0,12
50 - 80	16,00	0,15

OPERATION	
X.X	±0.40
X.XX	±0.25
X.XXX	±0.15
Angle	± 3°
DIM	TOL

Connector: 033 H 0XX - 1 6 7 U

Positions
(12, 16, 20, 26, 32, 40, 50, 68, 80)

REV	DATE	NOTE	NAME
1	17.09.2021	issued	JAL

Pancon GmbH, Kaiser-Friedrich-Promenade 4, 61348 Bad Homburg v.d.H.
Tel: +49(0)6172/9180157, www.pancon.de