LOUNGE SEATING

Tuxedo™ Cove Designer – Nienkämper

— US Only —

Model Number	Seat H"	Arm H"	W"	D"	H"	Fabric Yds.	Leather Sq. Ft.	COM	COL	Verde	Grano	Cremoso	Knoll Textiles 1	2	3	4
TUXEDO™ COVE THREE SEAT SOFA LEFT																
12449	17	46	79¼	31	46	12	216	9,110	9,565	13,685	15,270	15,810	10,140	11,085	12,100	13,150
COM Frame						8¼	149									
COM Seat & Back Cushion						4½	81									
TUXEDO™ COVE THREE SEAT SOFA RIGHT																
12450	17	46	79¼	31	46	12	216	9,110	9,565	13,685	15,270	15,810	10,140	11,085	12,100	13,150
COM Frame						8¼	149									
COM Seat & Back Cushion						4½	81									
INTERCONNECTING PANEL																
12451			44	3	38¾	2¾	50	2,120	2,230	3,485	3,725	3,845	2,355	2,570	2,810	3,045
12452			44	3	46	3½	63	2,570	2,700	4,285	4,580	4,735	2,875	3,150	3,450	3,750

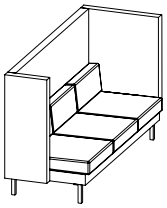

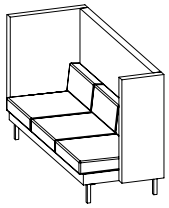

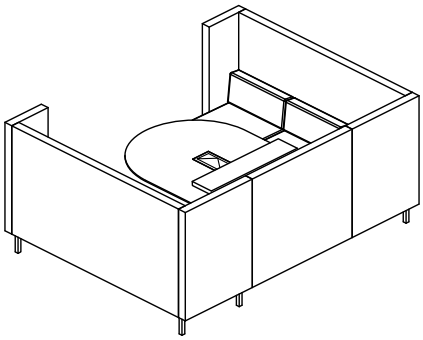

Tuxedo™ Cove Sofa with interconnecting panel
Model # 12451

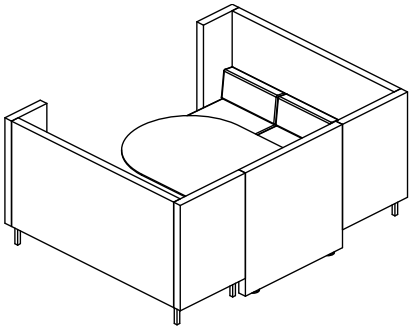

Tuxedo™ Cove Sofa with interconnecting panel
Model # 12452
panel with integrated cavity for wire management

Tuxedo™ Cove & Gateway™ Media Lift/Wall Mounted Table Designer – Nienkämper & busk + hertzog

Tuxedo™ Cove is composed of two 3 seat high back sofas with an interconnecting panel and table to form an enclosed booth for meetings, collaborative tasks or to be used as a touchdown base for the day. The high sides and back provide total seclusion from the surrounding environment without the need for interior substructures while additional privacy is maintained via the acoustic benefits of the interconnecting panel and the sofas high walls.

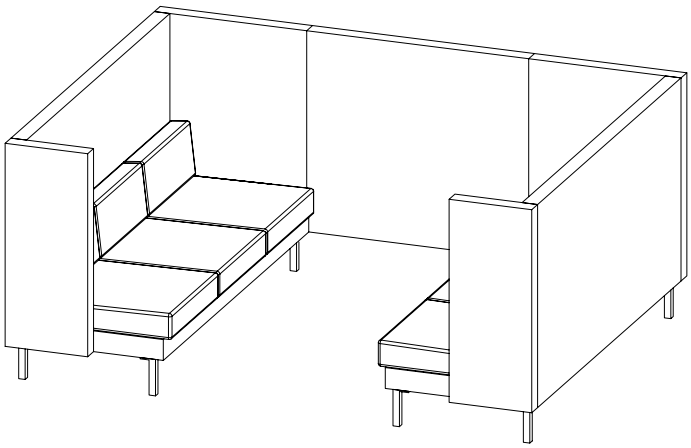

LOUNGE SEATING

Tuxedo™ Cove & Gateway™ Media Lift Table Designer – Nienkämper & busk + hertzog

Table options for Tuxedo™ Cove include the Gateway™ tables, with a full range of connectivity. The Gateway™ Media Lift Table with Relaxed Work Height (26" H) provides a free standing solution while the Gateway™ Wall Mounted Table with Relaxed Work Height (26" H) offers another option for television screen and monitor to be mounted on the interconnecting panel.

Gateway™ Media Lift Table effortlessly transforms meeting tables to create innovative multimedia solutions for communication, presentations and interactive work spaces. At the touch of the remote control, the unit raises the monitor screen up from the base cabinet. The ultimate in professional appearance, Gateway™ Media Lift combines sophistication and function to create additional space, protect your TV from damage or to hide it away from sight.

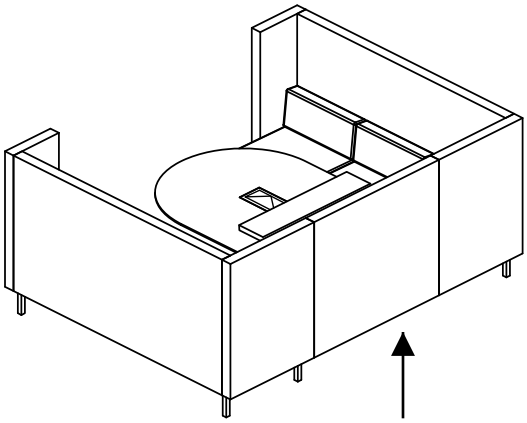

interconnecting panel: 39" h
Model # 12451

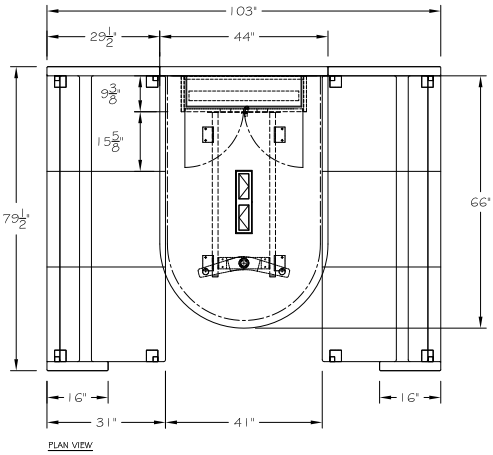

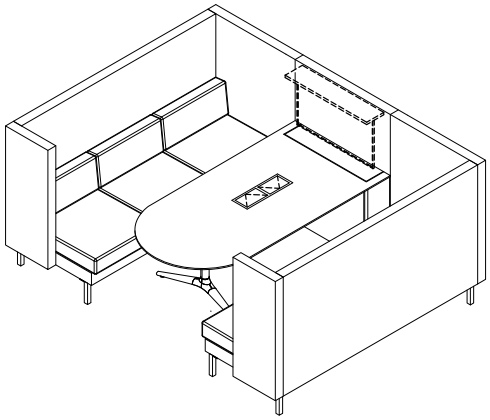

Model #	Description	Quantity	List Price
12449	Tuxedo™ Cove Three Seat Sofa Left in COM	1	9,110
12450	Tuxedo™ Cove Three Seat Sofa Right in COM	1	9,110
12451	Interconnecting Panel (39" H) in COM	1	2,120
43031/5	Gateway Media Lift Table – Relaxed Work Height 26" H in Standard P-lam	1	11,680
85213	Simple Side by Side Pop Up Forum Each side with two power & two open ports	1	1,200
		Total List:	33,220

Note:
- Gateway™ Media Lift Table Dimension 66" L x 44" D x 26" H.
- For standard veneer finish, model #43031/2, list price is $12,730.
- TV lift can accommodate a maximum TV size of 32".
- TV lift is included. TV is not included.

LOUNGE SEATING

Tuxedo™ Cove & Gateway™ Wall Mounted Table Designer – Nienkämper & busk + hertzog

Gateway™ Wall Mounted Table provides a simple solution by mounting a TV or monitor screen directly onto the interconnecting panel. The wall mounted Gateway™ table with single base provides maximum knee space for users.

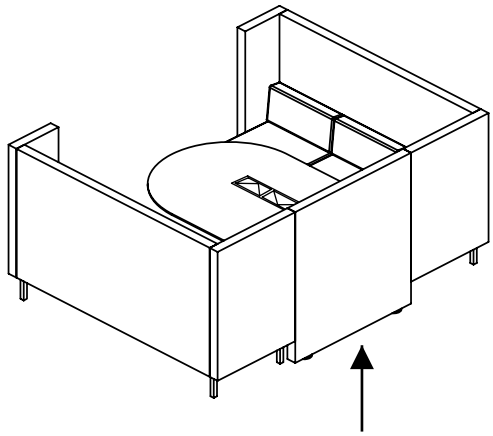

interconnecting panel: 46" h
Model # 12452

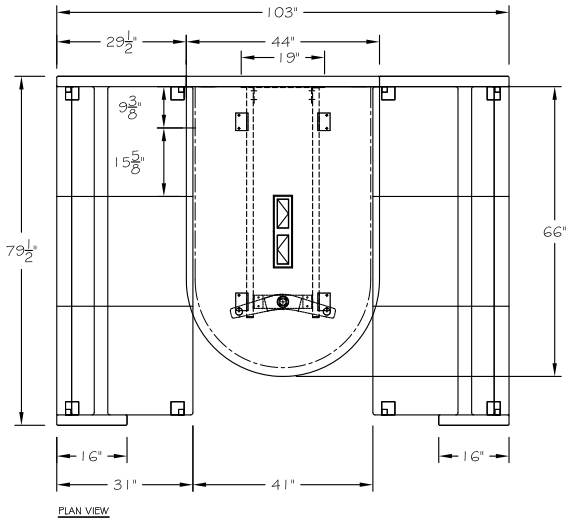

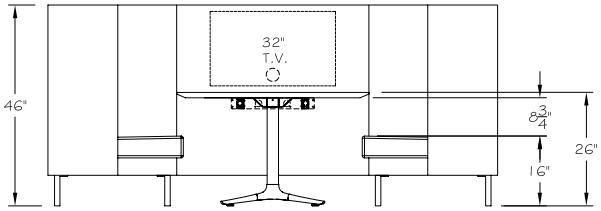

Model #	Description	Quantity	List Price
12449	Tuxedo™ Cove Three Seat Sofa Left in COM	1	9,110
12450	Tuxedo™ Cove Three Seat Sofa Right in COM	1	9,110
12452	Interconnecting Panel (46" H) in COM	1	2,570
43041/5	Gateway Wall Mounted Table – Relaxed Work Height 26" H in Standard P-lam	1	6,015
85213	Simple Forum Side by Side Each side with two power & two open ports	1	1,200
		Total List:	28,005

Note:
- Gateway Wall Mounted Table Dimension 66" L x 44" D x 26" H.
- For standard veneer finish, model # 43041/2, list price is $7,065.
- Maximum TV size to be mounted on panel is 32".
- TV & TV mount are not included.