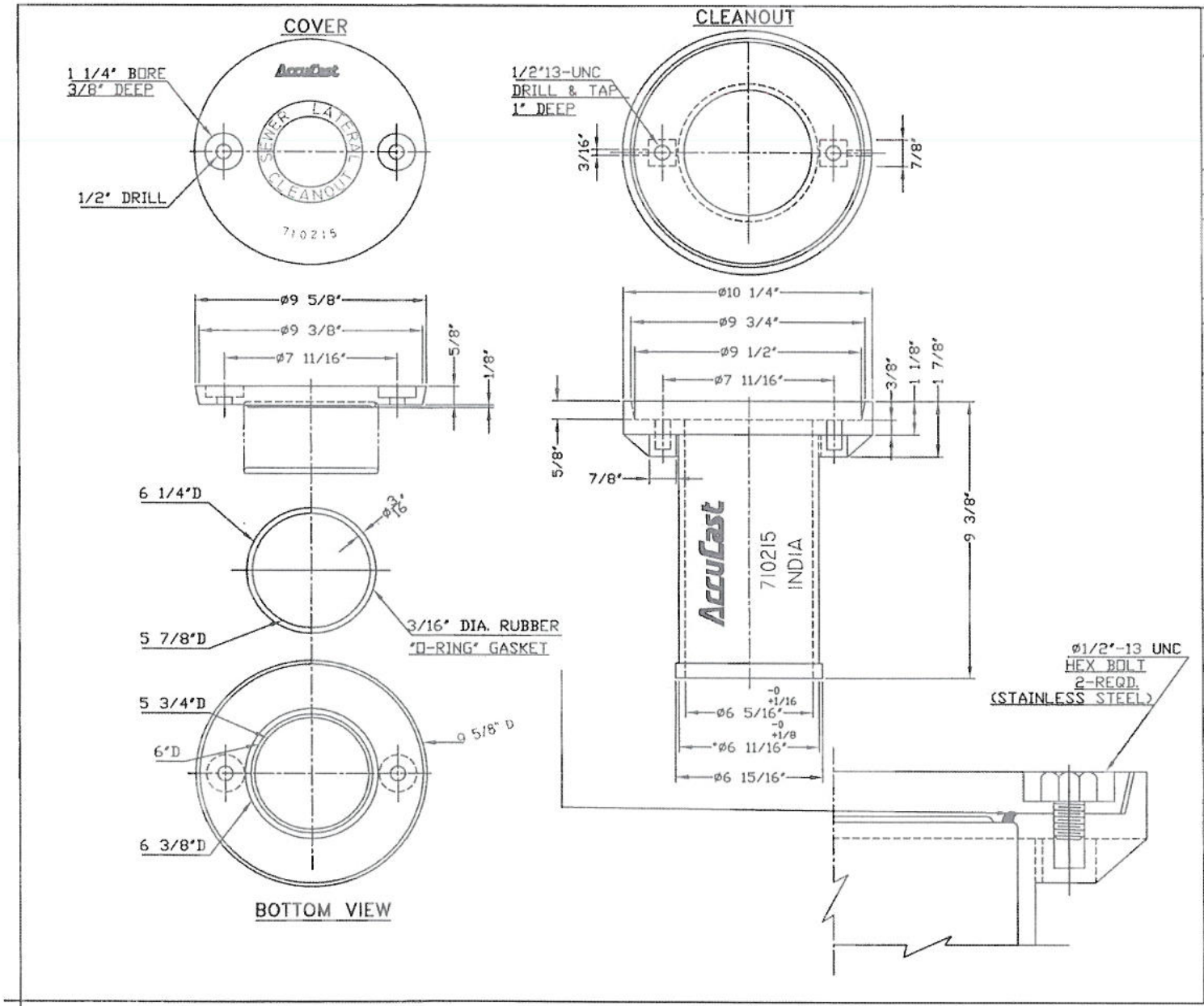

AccuCast
415 S. 21st. STREET
WACO, TX 76706
Phone 1-254-756-3200
Fax 1-254-756-0200
Watts 1-800-433-6885

DRAWN BY:-S D DATE:02/09/05

APPROVED:

REVISION: 02/09/05

SCALE: NOT TO SCALE

LOAD RATING
NONTRAFIC

MATERIAL SPECIFICATION
ASTM A48 CLASS 30

COATING
AS REQUIRED

ESTIMATED WEIGHT - LBS.
TOTAL 4 LBS

PART / DWG NUMBER
710225

CATALOG NUMBER
710225

6" LATERAL SEWER CLEANOUT - PLASTIC