Gainsborough Bathrooms
Gainsborough House
Brickyard Road
Aldridge WS9 8SR
United Kingdom
Tel: +44 (0)1527 400022

email: service@gainsboroughbaths.com
www.gainsboroughbaths.com

GENTONA & EZION INSTALLATION MANUAL

Access

When deciding on the positioning of the bath there are a number of points that should be taken into consideration:

1. Hoist/wheelchair access.
2. Service/cleaning access.
3. Positions of any existing under floor pipe work or cabling.
4. Conflict between doorways.
5. Distance from walls/other objects.
6. Under-floor obstructions (Water/Heating pipes, waste pipes,, under-floor heating etc)
7. Level Flooring

IMPORTANT – The bath should be sited at least **100mm** away from any wall. It must not be sited closer than 75mm without reference to the sales office for technical support.

FLOORING

Prepare the floor area and ensure it is flat, level and structurally sound & there are **NO SERVICES BURIED** within the floor fixing area. For clarity there should be no services within the Bath Foot Plate areas detailed on **Fig 3**.

Items

Items supplied with the Bath:

Information pack (This pack)
User manual
Bath unit complete (Bath Shell, Support Frame, Control pack)
Bath surround panels (Side panels, End panels, Foot skirt panels, Cosmetic sliding sets)
User handset
Lap Belt
Foot Base unit fixing kit (Comprising bolts/screws - see floor fixing kit)

Preparation

a) Carefully remove all packaging and inspect the bath thoroughly.
Note: Do not use sharp knives or instruments to remove packaging around the finished surface areas of the bath.

b) Ensure all component parts are present before beginning installation.
It is important to ensure the complete kit is there. If there are ANY components missing contact our service department and quote the number on the side of the bath.

c) Prepare the floor area and ensure it is flat, level and structurally sound and that there are NO SERVICES BURIED within the floor fixing area.

Bath Moving

IMPORTANT – Do not move the bath by the bath shell. Only use the metal support legs making sure the transport tie- rods are in place.

Quick sequence overview

- Check site position. Ensure all Pre-install requirements have been met.
- Inspect bath and panels for damage. Clear area and make sure floor is level and clean.
- Manoeuvre the bath into its intended position.
- Remove transport wheels from bath if fitted.
- Leave transport tie bars in place if fitted. Set the foot base plate distances to 1259mm.
- Mark the position of the floor fixing holes. Move the bath to allow the drilling of the holes
- Clean out dust and debris from holes.
- Connect bath to temporary power supply. Connect handset and power up seat then bath.
- Fit the two sliding cover sets at either end of the underside of the bath using the L brackets.
- Connect pre-built TMV plumbing kit to room connections using full bore isolating valves.
- Take a mating pair of foot skirt panels and offer into place at the head end of bath. Fasten to bath frame at end of bath using fixing points.
- Take one foot skirt panel and put in place aound the plumbing TMV kit. Trim panel as required to allow space for plumbing and electrical connections.
- Fit rear side panel. Slide panel under lip of bath and then support while fastening under the bath using the L brackets. (If space is limited, do this once bath is in final position.)
- Fit head end panel by sliding under lip of bath, support while fastening to the rear side panel using 2 x white headed pozi screws.
- Place bath into position and fasten plumbing support bracket into place. Connect plumbing kit to bath connections. Screw down onto base foot plate. Connect waste using manifold.
- Fix bath to floor. Feet frames MUST be Level and Vertical. Use a spirit level. Utilise shims if required. Remove transport tie-bars.
- Make a permanent electrical connection and secure cable using conduit if required. Make sure there is enough flex to allow bath to raise and lower.
- Offer up front foot skirt panels for both tap and head end.(4 x white slot white fasteners.)
- Fit tap end panel by sliding under lip of bath. Fasten under the bath using the L brackets.
- Fit cosmetic jointing cover strip to each of the two rear foot skirt panels for both head and tap ends. (2 x slot headed white fastners each end). Then fix to front foot skirt panels.
- Fasten Chrome handset holder into place. Fit handset connnector socket to front panel.
- Fit front panel. Slide panel under lip of bath. Fasten under the bath using the L brackets.
- Check for leaks and operation. Check temperature set up on the TMV control(s)
- Check fit of panels (These can be adjusted on the L Brackets on bath and panels)
- Offer up under tray to underside of bath and slide into place between the front and rear panel. Fix with push fit fasteners.
- Attach SWL and labels as required.
- Fully test sequence

No power tools should be used on panel fixings

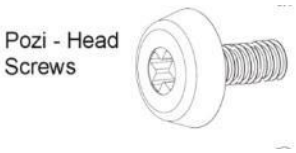

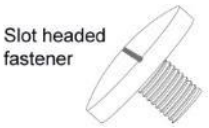

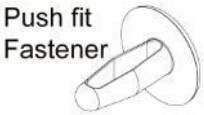

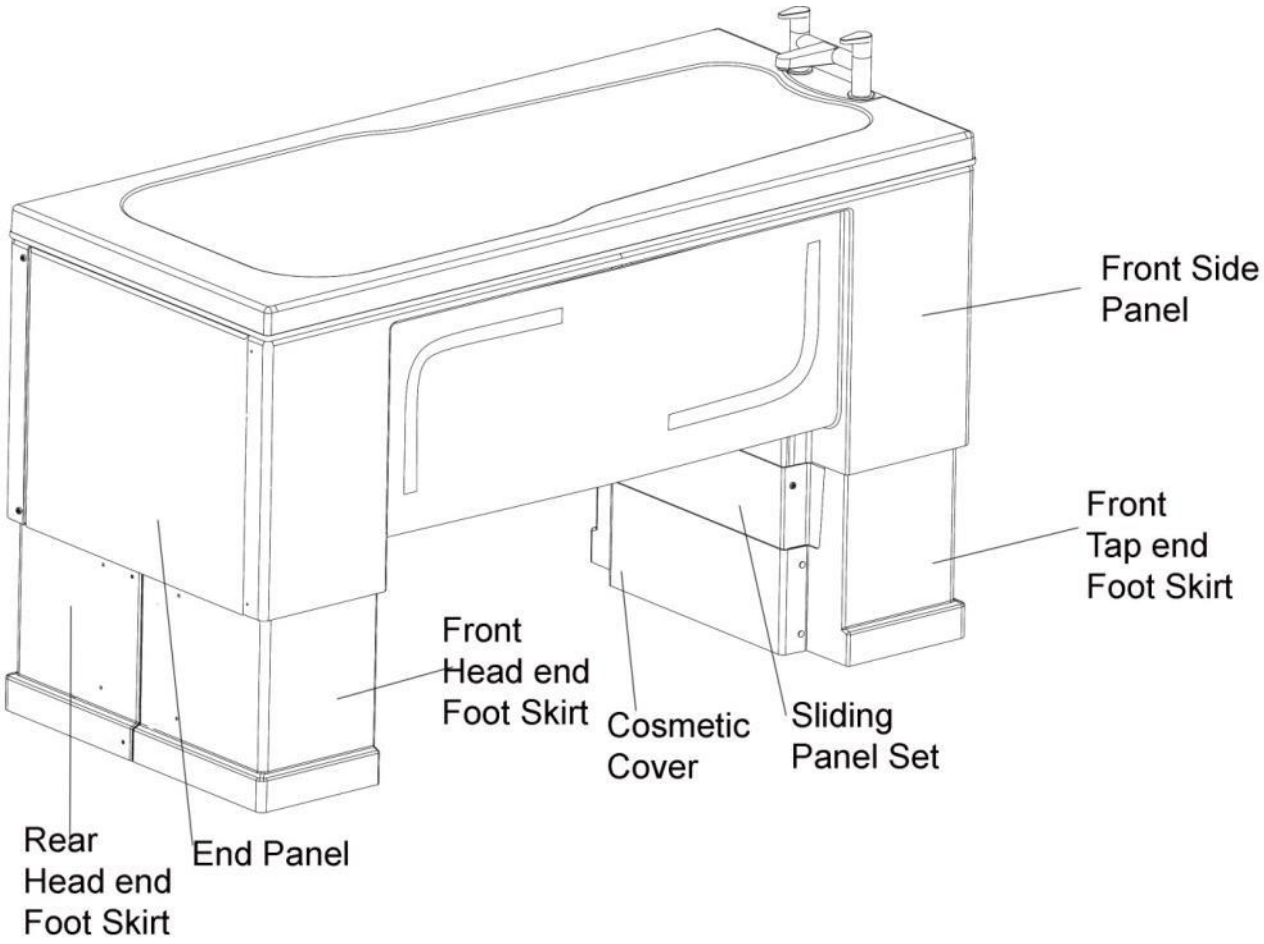

GENTONA 1700/1500 Key Information

Maximum Fixed Seat 160Kg; Transfer Seat 140kg.
Maximum Water Capacity: 230/200 litres
Approximate Bath Weight (Empty):170/142Kg.
Power Supply: Mains 230V to be supplied via 30mA RCD.
Operating Voltage: 24V
Battery Backup: Yes.
Water Supply: Hot & Cold water at 1 bar minimum.

RIGHT HAND SHOWN *(diagram shows transfer seat option)*

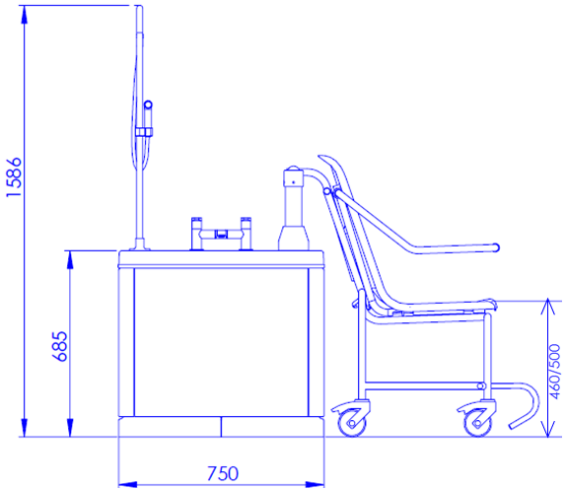

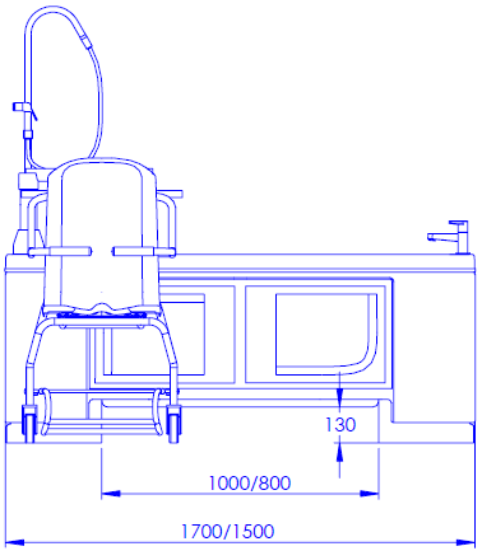

Gentona Transfer Seat Height: 500mm
Gentona Fixed Seat Height: 460mm

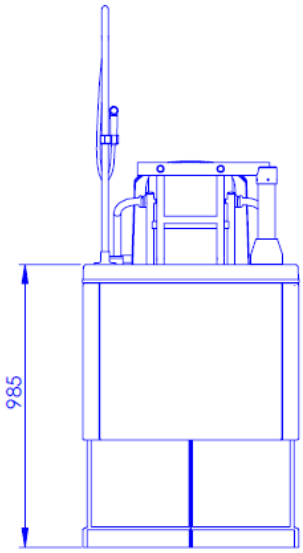

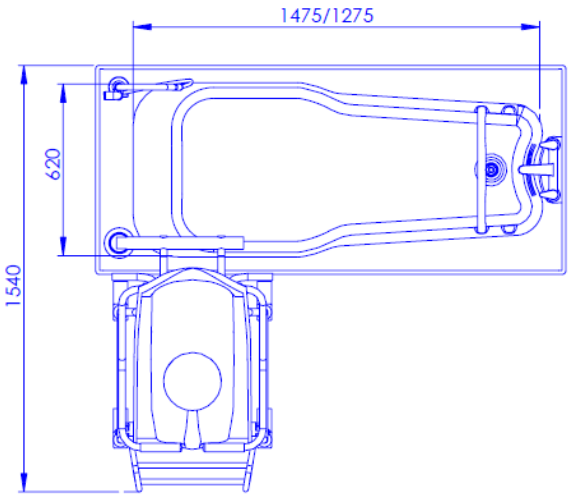

EZION 1700/1500 Key Information

Maximum User Weight: 160Kg; Maximum Water Capacity: 230/200 litres
Approximate Bath Weight (Empty):180/152Kg.
Power Supply: Mains 230V to be supplied via 30mA RCD.
Operating Voltage: 24V
Battery Backup: Yes.
Water Supply: Hot & Cold water at 1 bar minimum.

RIGHT HAND SHOWN

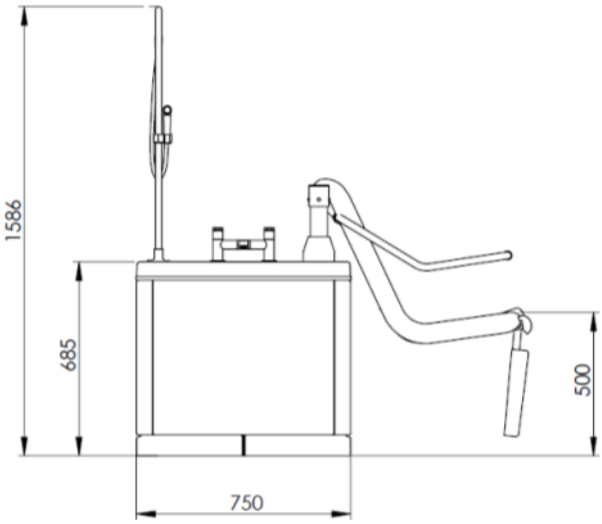

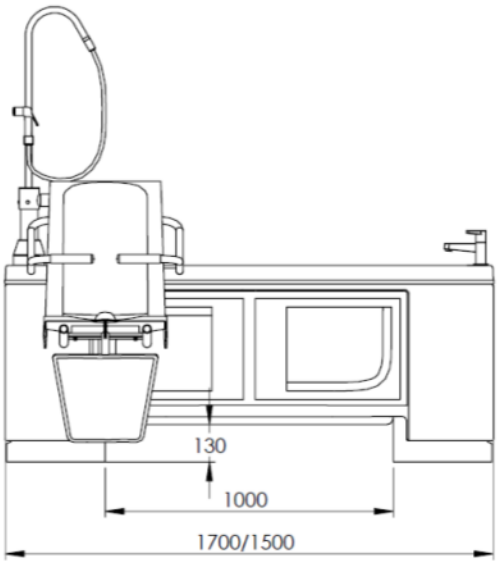

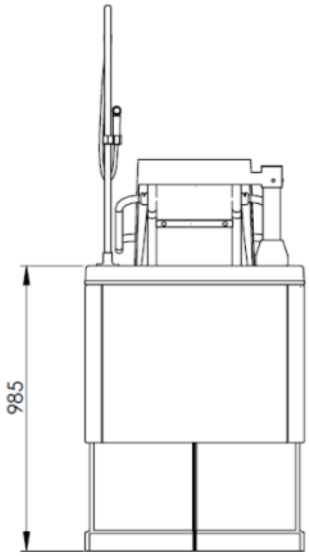

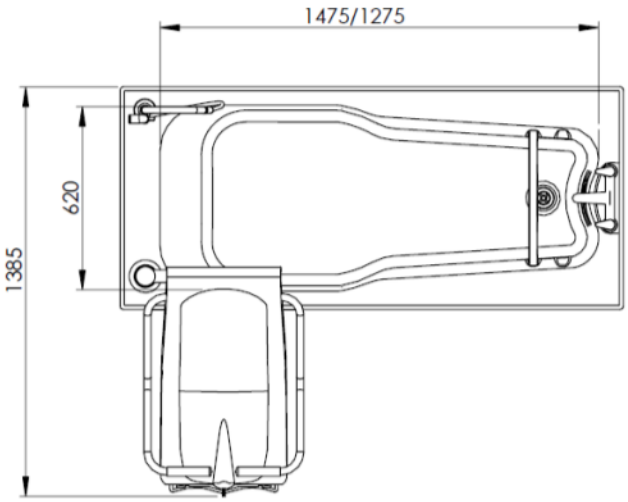

Bath Fitting

Ensure that the site is ready as per the Pre Installation Requirements.

1/ **Inspect site position** and ensure it is ready for installation and clear from dirt and debris.

2/ **Move bath into local area.** There are 4 x transport wheels – one in each corner and two transport bars. Remove the transport wheels and - if fitted - leave the two tie-in transport bars in place until panel fitting. These help keep the foot base plates vertical.

3/ **Offer Bath into place** making sure there is a minimum of 100mm clearance around the bath where practical.
The floor should be of a sound, solid surface with no movement or flex. If the floor slopes (i.e. Wet room installation with a centre drain) employ shims which should be fitted under the bath foot plates making sure that the fixings hold the feet firmly in place.
The most common issue with bath failure is the bath not being fitted level and firmly to the floor.

4/ **Set Foot base plates.**

Fig 2

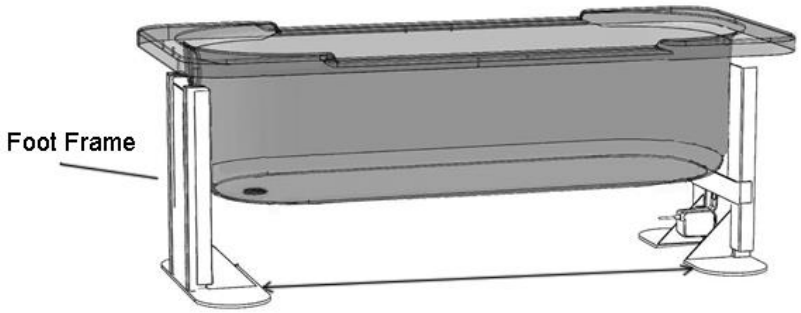

1700 bath Ensure the space between the Foot base plates is set at 1259mm. The Foot base plates **must** be vertical and upright.
1500 bath Ensure the space between the Foot base plates is set at 1059mm. The Foot base plates **must** be vertical and upright.
Tip – Floor Finish must be in place (i.e. Altro / Tiling etc.)

5/ **With the bath** in place mark the floor where it is to be drilled See **Fig 4** and addendum. **Remove the bath** from the working area.

6/ **Drill the marked fixing holes from Fig 4** taking into account the type of fixings that will be used. Ensure they are into solid flooring.

7/ **Clean out the holes** making sure that all dust and debris is removed.

DO NOT FIT THE BATH AT THIS POINT

8/ **Connect the bath** to a temporary power supply.
Connect the handset to the loose grey cable connector socket. Power up bath using the handset to allow work to be carried out underneath it. Note that the seat has to be raised up and traversed to its position over the bath before the bath will lift.

Fig 3

Note:
Bath is sited 100mm away from the buildings walls to allow access for installation and to prevent trappage.
If reduced, consideration should be given to additional help on installation and amendments to dimensions given in this document. Seek clarification from Gainsborough regarding minimum sizes.

Right hand bath shown – swap dimensions for opposite hand!

A = Plumbing feeds.
B = Waste Outlet

Attention should be paid to the flooring in the footplate area which will be drilled to receive fixings. This must be of sound construction with no buried services in foot plate area.
Additional dimensions are given in the addendum.

Fig 4
Fixing points to floor.
Bath Foot plates – fixing holes. See Addendum and / or template for hole positions.

Holes marked in Red with '**IMPERATIVE - A**' must have a firm fixing made to the floor. These fixings are the opposite side of the seat and carry the load. The hole marked **IMPERATIVE – B** should also be fixed to the floor to ensure the bath is firmly held down.

Holes marked in Blue with ' **SECONDARY**' At least one or more of these must be firmly fixed at foot end of the bath to prevent the foot end of the bath being moved.

RIGHT HAND BATH – SHOWN

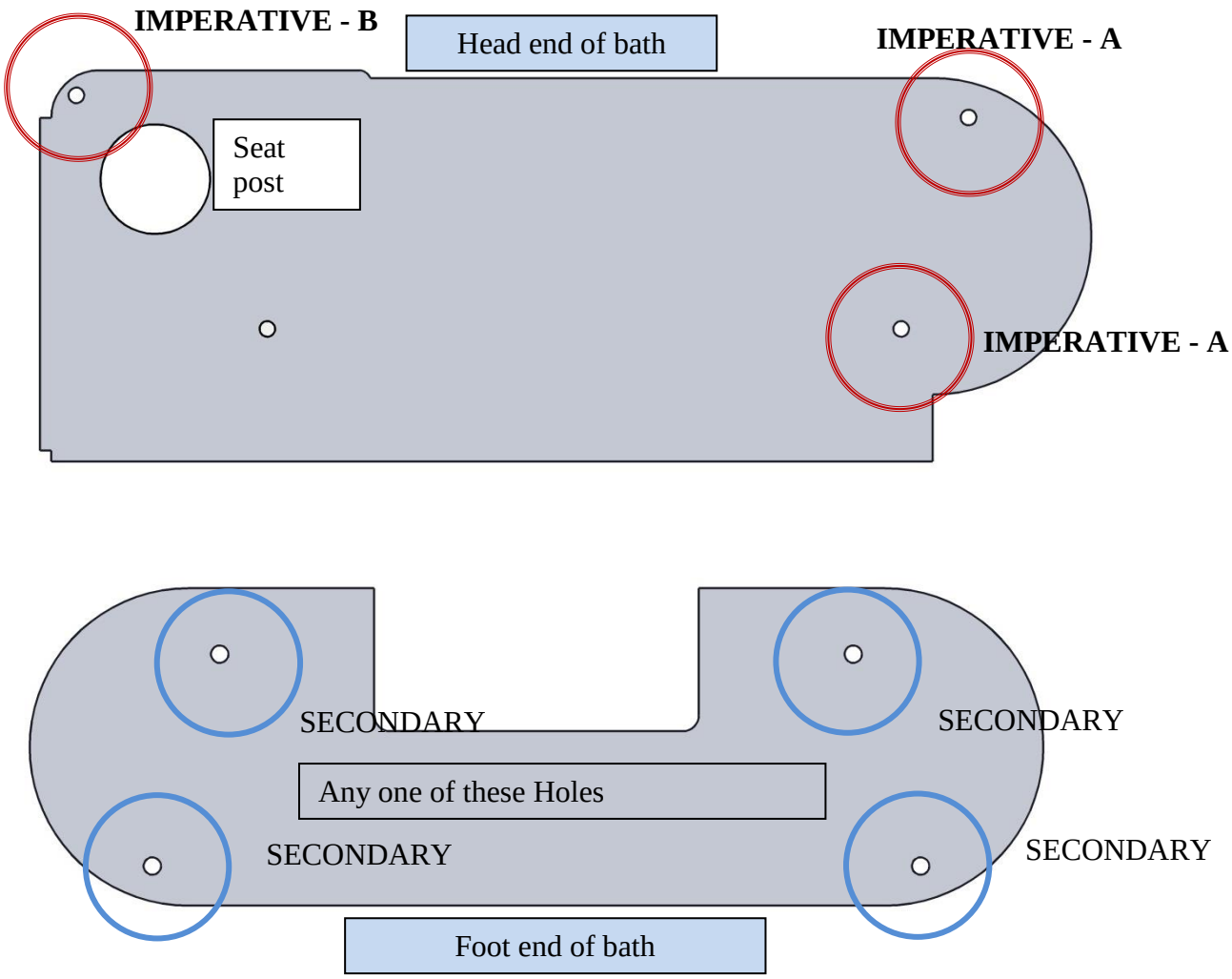

Description	Qty	Floor Type
M8 x 60mm S.Steel Hex Head Coach Screw	4	Concrete/Composite
M8 x 40mm S.Steel Hex Head Coach Screw	4	Wood/Floorboard
M10 x 50 Nylon Plug Type E	4	
M8 Form C Washer - BZP	4	

*Sleeves will not grip unless the hole is cleaned out first.
Ensure washer is placed between Fischer screw head and foot plate to protect the painted surface.

9/ Take the two sliding panel assemblies and offer them under either end of the bath & fasten them in

place using the L brackets. Note that the white cross-bracket (a) onto which they fit is secured to the bath frame via slots, allowing some sideways adjustment.
This adjustment should be used to ensure that the sliding panels do not catch on the rigid foot skirts (see step 11) as they rise and fall.
Tip Make sure they are the correct side up so that they fully extend. They will not reach the floor.

Fig 5

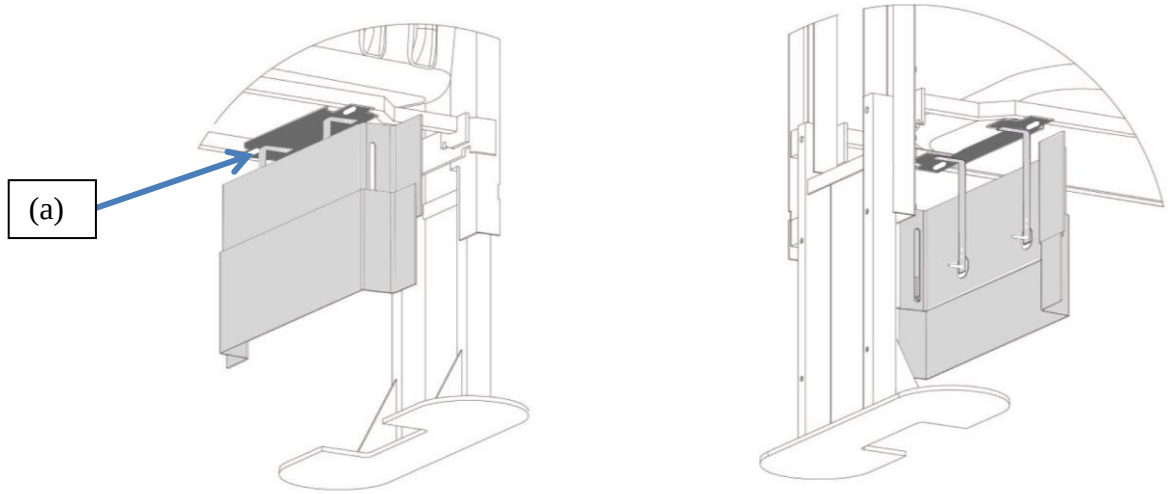

10/ **Plumbing kit. -**Take the pre-built plumbing kit and connect to the pre-fitted bathroom plumbing as per the pre-installation document. Ensure that the plumbing feeds are the correct way round taking note of the coloured feed indicators on the plumbing kit. **See TMV Addendum at back of this pack.** The TMV heads should point towards the head end of the bath when the bath is in position.
Note: If connected to a facility that has pre-set 'blended' water supply then the TMV's will not be required. Check with the owner of the property to ensure that the temperature of the blended water supply is no more than 43 degrees.

11/ **Take a mating pair of foot skirt** panels and put into place at the head end of the bath. Fasten the foot skirt panels to the foot frame at the end of the bath using 2 x white headed pozi screws. **Fig 6.** Fasten to each other using 2 x white pozi headed screws at each end.

Fig 6

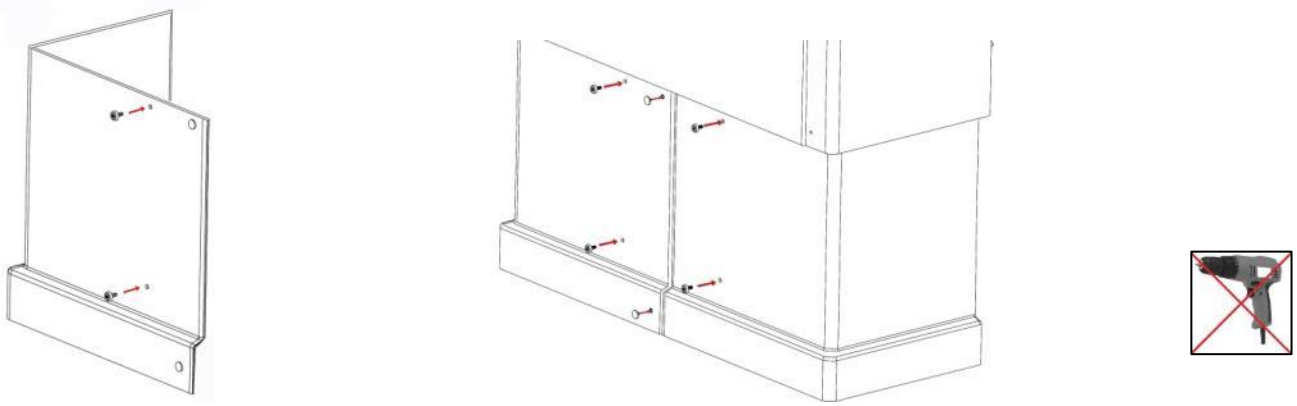

12/ **Take a foot skirt panel** and place it around the plumbing kit. Its exact positon can be determined by using the positions from bath fixing holes previously marked as **Fig 7**. This will allow you to mark and trim the panel to allow access for pipes and cable.

Fig 7.

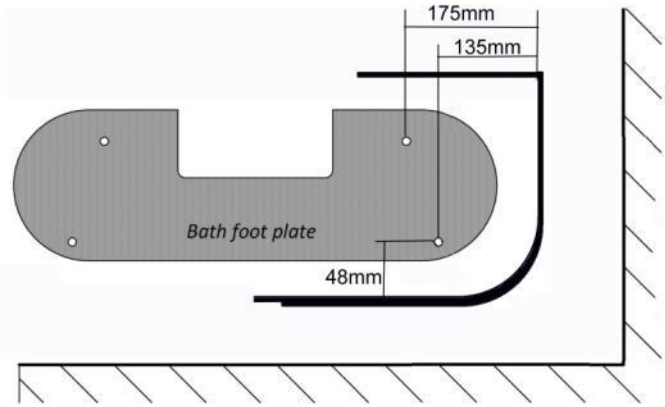

13/ **Fitting the rear side panel**. If the bath is easy to access all the way around, fit the rear side panel now. Guide it under the lip of the bath and then while you are supporting it, fasten into place under the bath using the 2 x L brackets. **Fig 8.** Make sure the Foot wrap panels are inside the rear side panel.
If space is limited leave the rear panel after point 18.
Tip – Use strips of masking tape to hold the panel in place while you fix the panel into place.

Fig 8

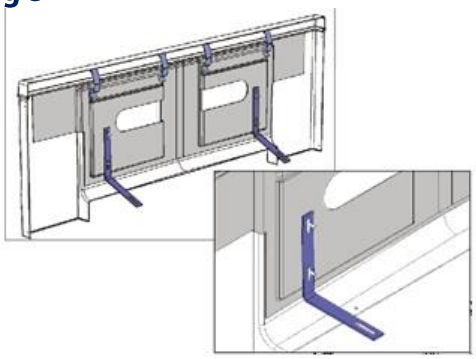

14/ **Fit the Head End panel.** Slide the head end panel under the lip of the bath and while supporting it fasten to the rear long panel using 2 x white headed pozi screws. Make sure the Foot wrap panel is inside the tap end panel. **Fig 9.**

Fig 9

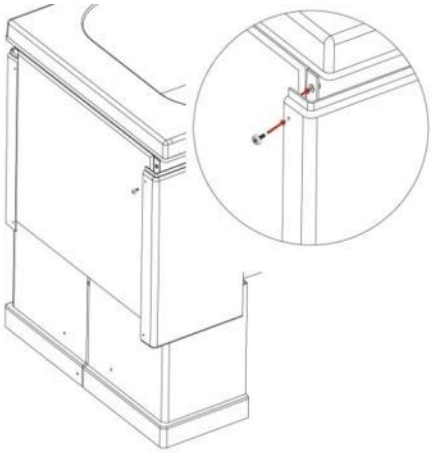

15/ **Place bath into position** if not already there.

16/ **Connect the plumbing** connections to bath and also to the waste if not previously done. Note that the waste connection height can be adjusted on the slotted waste bracket.
Tip – We recommend using zip ties to secure the feeds to prevent undue movement. The Waste manifold positioned on the far side of the TMV plumbing kit can be swivelled to allow side or end exit.

17/ Fix **the bath** to the floor. Use the supplied fixings ensuring the washers are used to prevent damage to the paintwork..
Use a spirit level to ensure the feet frames are **vertical** in both planes. This is the most common cause of issues with incorrect installation. Use shims if required. Once complete remove the transport tie-bars.

18/ **Make a permanent electrical** connection following current IET regulations and secure cable with conduit if required for cable protection. Ensure the bath is fully earthed. Where a Spa is fitted a 13 Amp IP65 rated non-switched fused spur is also required as shown.
A 30mA RCC or RCBO is required in compliance in accordance with 17th Edition IET regulations. This should be located outside the bathroom or on the consumer unit covering that area of the building.
Earth Bonding and Cross Bonding are to be fitted and tested for continuity in accordance with IET regulations.
The trailing flex should be protected by use of protective conduit.

19/ **Place the tap end front foot** skirt panel into place at the tap end of the bath. Fasten the foot skirt panel to the foot frame at the end of the bath using 2 x white headed pozi screws. **Fig 6.**
Fasten rear and front foot skirt to each other using 2 x white headed pozi screws at each end.
(Fit rear tap end panel if not already done –see point 13.)

20/ **Offer up the tap end panel** into place. Guide it under the lip of the bath and inside the rear side panel lip. Support it while screwing in two white headed pozi screws to join the rear side panel to the end panel. **Fig 9**.

21/ **Offer up the two small cosmetic** covers to the foot skirt panels for both head and tap ends. Locate them into place over the rear and front skirt panels. These should sit outside the sliding panel sets. Fasten into place using 4 x slot headed white fasteners at each end. **Fig 10**

Fig 10

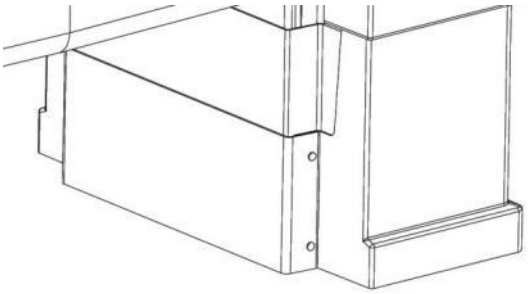

22/ **Fasten the chrome handset holder** in place onto the side of the bath using the two holes in the bath.

23/ **Unplug the handset**. Offer up the handset connector through the front panel and fasten into place on the front panel. Remove plastic Circlip from socket blanking plug. Fit handset Jack into socket connector. Fit Circlip into place around Jack ensuring the two lugs locate correctly.

24/ **Fit the front panel** to the front of the bath. Guide it under the lip of the bath and then while you are supporting it, fasten into place under the bath using the 2 x L brackets.
Tip – Use strips of masking tape to hold the panel in place while you fix the panel into place.

25/ **Operate the bath, taps and waste**. Check for leaks, water temperature and bath operation. If the bath water temperature needs alteration, slide up the middle cosmetic panel to access the TMV and adjust as per manufacturer's instructions.

26/ **Check the fit of the panels.** These can be adjusted if required on the L brackets to ensure a good cosmetic finish.

27/ **Offer up the bath tray** to the underside of the bath and slide into place between the two side panels. Push the 4 x push fit fasteners into place to hold the tray in place.
Tip – You may need to pull the panels out slightly at the bottom to allow the tray to fit.

28/ **Attach labels as required** and fully test sequence prior to handover.

Addendum

Head End Foot Base plate

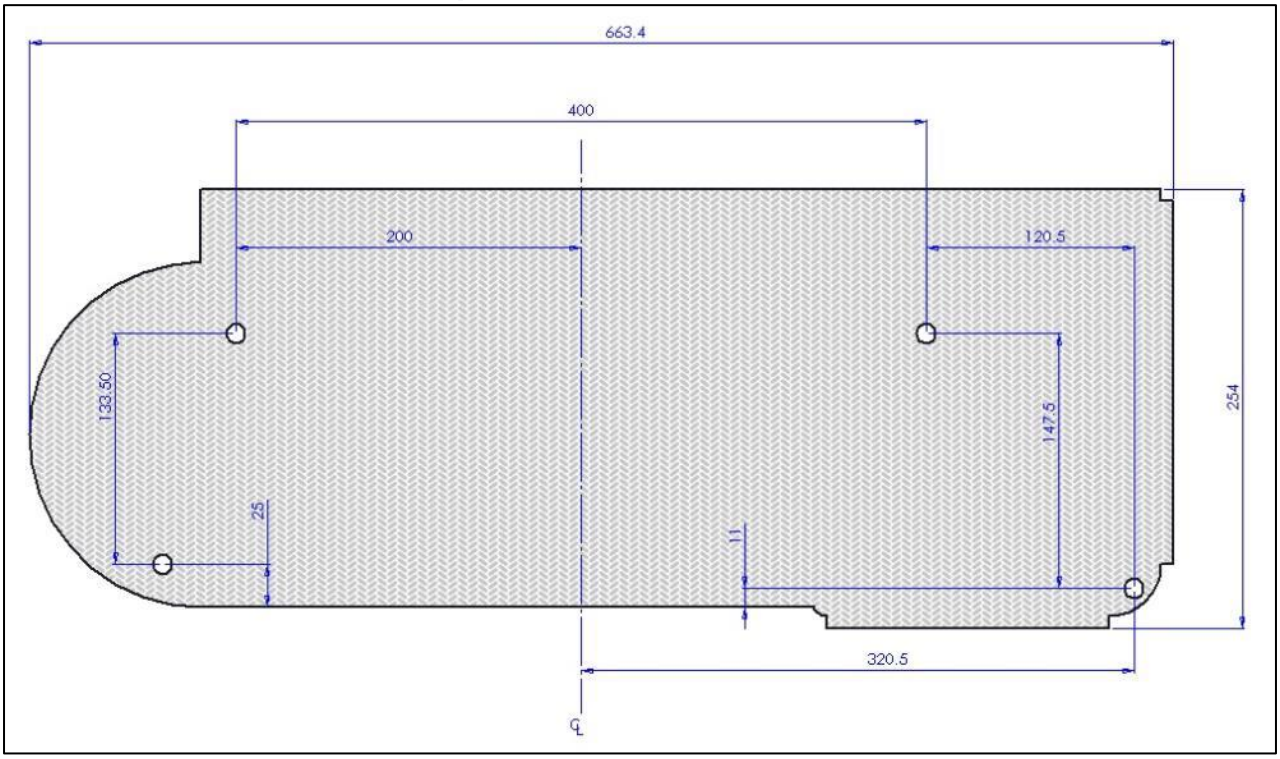

Tap End Foot Base plate

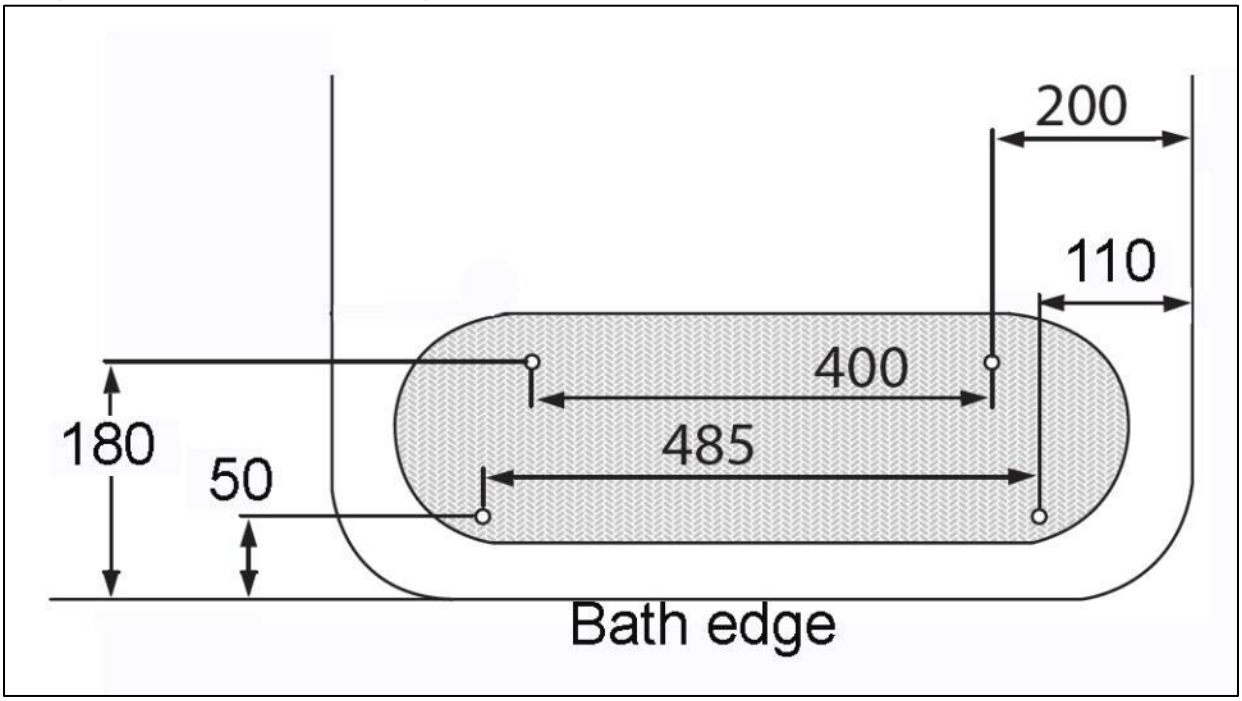

installation & maintenance guides

Heatguard® TMV3 Thermostatic Mixing Valve

Heatguard® TMV3 Installation Instructions

Installation

Before installing the Heatguard® TMV3 valve ensure that the designation of the valve matches the application, flow rates, dynamic pressures, and temperatures must be within the limits stated.

The Heatguard® TMV3 valve can be installed in any orientation provided that the hot and cold supplies are connected to the appropriate indicated inlets. The Heatguard® TMV3 valve should be fitted with the supplied union type adaptors.

The valve should not be installed until the system has been flushed until free of all debris. Once this is done the strainers and check valves can be fitted into the adaptors and the valve body installed.

The Heatguard® TMV3 thermostatic mixing valve contains temperature sensitive components. Soldering near the union adaptors or main valve body must be avoided.

Commissioning

Please ensure that the commissioning of the valve is done under normal operating conditions. The Heatguard® TMV3 thermostatic mixing valve is supplied factory set at 38˚C. To alter this setting proceed as follows:

1. Remove the cover cap (Fig 1).

2. With both the hot and cold supplies turned fully on and the terminal fitting open, adjust the temperature to the required setting. Using the adjuster tool supplied turn the adjuster clockwise to decrease or anti-clockwise to increase the temperature (Fig 2). A digital hand-held thermometer should be used to measure the outlet temperature correctly.

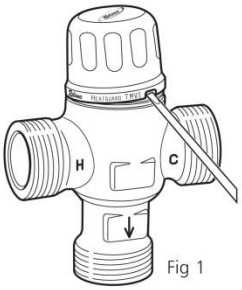

Fig 1

3. Once the correct outlet temperature has been achieved the valve's internal mechanism should be exercised at least 3 times by alternately isolating the hot and cold supplies. This will cause the piston to travel its full stroke and will ensure that the valve is operating correctly. If the set temperature has drifted after this operation then the commissioning operation should be repeated.

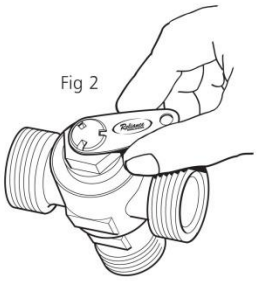
Fig 2

Once the valve has been commissioned a fail-safe shut off test should be performed.

1. Isolate the cold supply. The flow should reduce to a trickle within a second or two depending on site conditions.

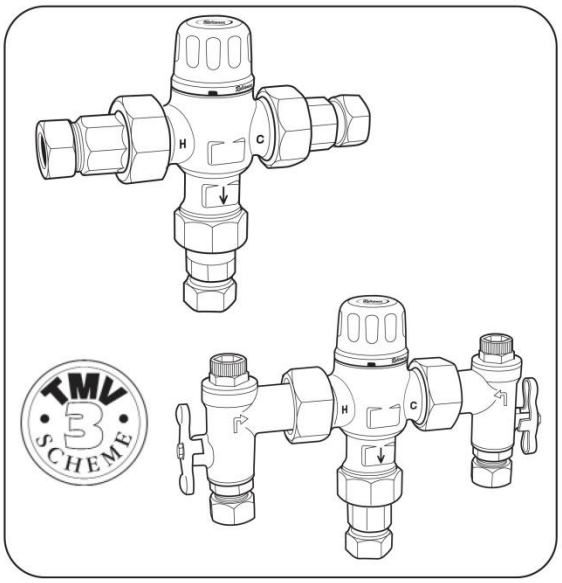

The Heatguard® TMV3 is a type 3 thermostatic mixing valve which has been manufactured to NHS model engineering specification DO8 and is approved under the TMV3 scheme.

2. Restore the cold supply and check that the set temperature has not altered.

3. Repeat the test for the hot supply.

If either fail-safe function does not operate, ensure that supply pressures and temperatures are within the valve's normal operating parameters. In addition, check that the hot supply temperature is at least 10˚C above the valve's set mixed outlet temperature i.e. hot to mix differential temperature.
If this is not the case then the valve will be slow to shut down on cold water failure.

For optimum performance it is recommended that the dynamic pressures be as close to equal as possible. If the dynamic pressures are outside a 10:1 ratio then a pressure reducing valve should be fitted to the higher supply pressure or if preferred, the lower supply pressure boosted.

When the Heatguard® TMV3 valve has been set and tested, refit the cap.

A record of the commissioning settings should be made for comparison with future performance checks.

Maintenance

To comply with current NHS guidelines the Heatguard® TMV3 valve should be tested against the original performance results 6-8 weeks after installation. If the temperatures have remained set to within 2˚C and the fail-safe function is operating correctly, then a six monthly cycle of performance testing can be implemented.

PAGE 2

Heatguard® TMV3 Thermostatic Mixing Valve

Performance checks

Performance checks that should be carried out at routine maintenance times are:

1. Check the set temperature using a hand-held digital thermometer.

2. Carry out the cold and hot fail-safe shut off tests.

3. If there is no significant change to the set outlet temperature (2˚C or less change from the original settings) and the fail-safe shut off is functioning, then the valve is working correctly and no further service work is required.

Cleaning the valve

1. Isolate the hot and cold supplies and remove the valve body from the installation by undoing the adaptor union nuts. Make note of the orientation of the parts as they are removed so that they can be reassembled in the correct manner (Fig 3).

2. Remove the check valves and strainers fitted in the adaptors and check for damage, rinse in clean potable water.

3. To clean the internals of the main valve body, first remove the cap, and then carefully remove the valve headwork by unscrewing the large hex nut.

4. Slide the piston and thermostat assembly out of the valve body and clean all internal surfaces and 'O' rings with a weak solution of scale remover approved for use with potable water.

5. Using a WRAS approved silicone based waterproof grease, lightly lubricate the 'O' ring in the body and the external surface of the piston.

6. After cleaning, re-assemble the Heatguard® TMV3 valve. Exercise, reset and test the valve as laid out in the commissioning section.

Working parameters and specifications

Factory temperature setting :	38˚C
Temperature setting range :	38-46˚C
Temperature, hot supply :	52-65˚C
Temperature, cold supply :	5-20˚C
Minimum hot to mix differential temperature :	10˚C
Temperature stability :	± 2˚C
Working pressure, static :	16 bar max.
Working pressure, dynamic :	Low pressure 0.2 - 1 bar High pressure 1 - 5 bar
Maximum pressure loss ratio :	10:1
Flow rate, minimum :	4 lpm
Flow rate @ 1bar pressure loss :	21 lpm

Approved specifications

Code	Operating Pressure	Application
HP-S	High Pressure	Shower - maximum temperature 41˚C
HP-W	High Pressure	Washbasin - maximum temperature 41˚C
HP-B	High Pressure	Bidet - maximum temperature 38˚C
HP-T44	High Pressure	Bath fill- maximum temperature 44˚C
LP-S	Low Pressure	Shower - maximum temperature 41˚C
LP-W	Low Pressure	Washbasin - maximum temperature 41˚C
LP-B	Low Pressure	Bidet - maximum temperature 38˚C

Fig 3

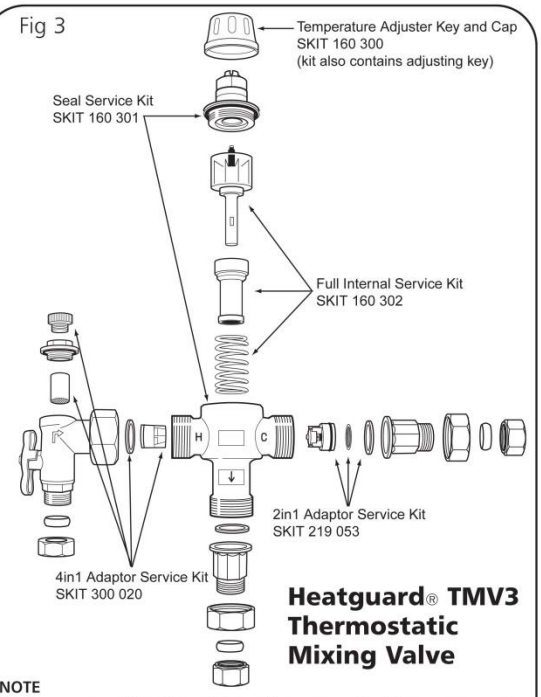

NOTE
When re-assembling the mixing valve, ensure that the components are replaced in the correct order (as illustrated).
Use only WRAS Approved silicon based waterproof grease.

Flow Rate

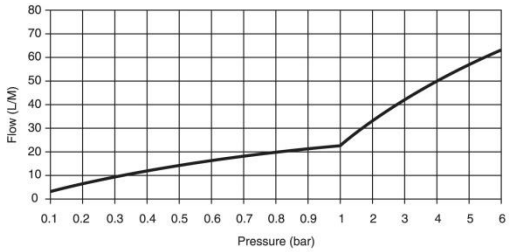

Reliance Water Controls Ltd
Worcester Road, Evesham, Worcs WR11 4RA, UK.
TEL: +44 (0)1386 47148 FAX: +44 (0)1386 47028
SALES DIRECT LINE: +44 (0)1386 712400
www.rwc.co.uk

Reliance® reserves the right to make changes to the product which may affect the accuracy of the information contained in this leaflet.
Reliance Water Controls® Limited are part of Reliance Worldwide®. ©Reliance Water Controls®, 2001.

ZINS 160001 - 001 - 10/01