Installation guide
Billi Quadra & Quadra Plus XL, XT, XR tap options

(905010, 904010, 905020, 905025, 905040, 905060, 905065, 904020, 904025, 904040, 904060, 904065, 904100, 904105, 904107, 904180, 904187)

Version 11/2021

Installation requirements.
XL, XT, XR.

Components for Billi Quadra Compact, 420, 440, 460, 4100 & 4180 Models

Before commencing installation, ensure you have identified the following.

1. Underbench module
2. Dispenser upper with tubing
3. Dispenser base & mount
4. Barb locking bush
5. 4mm chrome screw & allen key
6. Large washer
7. Tube spring clamps x 3
8. 600mm flexible braided hose
9. Drain fittings (water-cooled only) including John guest fittings
10. 3/8 tube connected with adapter to 3/16 black tube
11. ½ inch drill bit (not included)
12. Behind door panel:
    a. filter cartridge
    b. user guide
    c. warranty registration card
13. Ensure a Stop Tap is installed 600mm from the Billi unit water supply inlet (Stop Tap not supplied)

Additional Components – XR

14. Remote panel kit

Determine Unit Location

Plan the installation. Dispenser tube lengths, position of power and water outlets, required air space around the underbench module and access for service must be considered before cutting tube lengths. Refer to Diagrams 1 and 2 and the table below for clearances around unit. Unit must be installed horizontally with display panel facing to front of cupboard. The Quadra is designed for internal installation only.

Model	Height	Width	Depth
Quadra Compact Water cooled	340mm	315mm	365mm
Quadra Compact Air Cooled	340mm	315mm	410mm
Quadra 400 models/ Quadra Plus Water cooled	340mm	315mm	465mm
Quadra 400 models/ Quadra Plus Air Cooled	340mm	315mm	510mm

Water Supply

The Quadra must only be connected to a cold water supply. A ½" BSP stop tap (not supplied) is to be installed in an easily accessible position within 600mm from the Quadra water supply inlet. The Quadra incorporates a certified pressure limiting and backflow prevention device. Do not fit an additional pressure limiting valve.

Dynamic water supply pressure:
Min. 250kPa, max. 1000kPa.
Supply temp: min. 5°C, max. 30°C.

Do not install with water that is microbiologically unsafe or with water of unknown quality without adequate disinfection before or after the system. Systems certified for cyst reduction may be used on disinfected water that may contain filterable cysts.

Power Requirements

A single 3 pin GPO is required. A dedicated circuit should be provided and must be fitted with an earth leakage protection device (RCD). An externally fitted RCD device is acceptable. Quadra Compact 420, 440, 460, Plus 5 and Plus 9 require a 10 amp rating.
Quadra 4100 and Plus 15 require a 15 amp rating.
Quadra 4180 requires a 20 amp rating.
All Quadra models are supplied with a 1 metre flex cord and plug.

Drainage

Water-cooled Quadra models require a drainage point such as a dishwasher nipple. Use the nipple adaptor fitting supplied or the clamp-on drain adaptor (both supplied with system). Clamp-on drain adaptor must be installed above the water seal on the sink side of the water trap.

Ventilation
Required for Air-cooled Models only

Air-cooled Quadra models require cupboard ventilation, adequate air space and an unobstructed clearance of at least 25mm on each side of the underbench unit. Door ventilation is to be provided in the bottom and top of the cupboard door (Diagram 3). Suitable vent grills are available from Billi Australia Pty Ltd (Part no: 985050). For high usage installations, an optional low voltage door fan kit is available and should be fitted if cupboard internal temperatures exceed 35°C (Billi Part no: 990713).

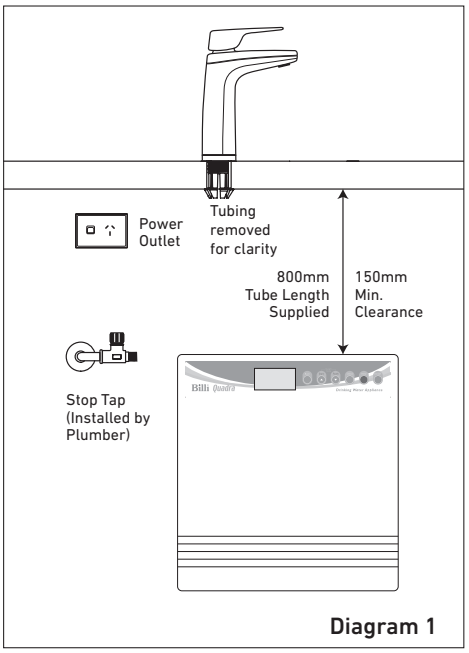

Diagram 1

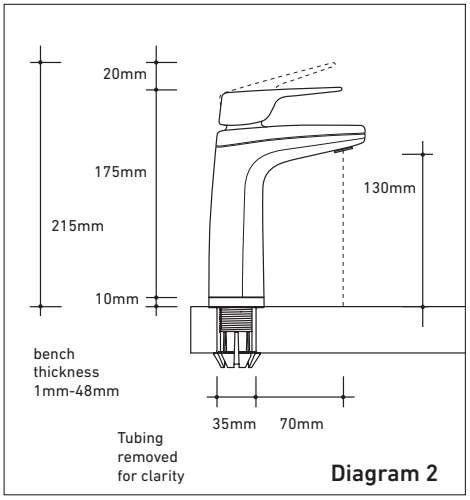

Diagram 2

Air-cooled Models only

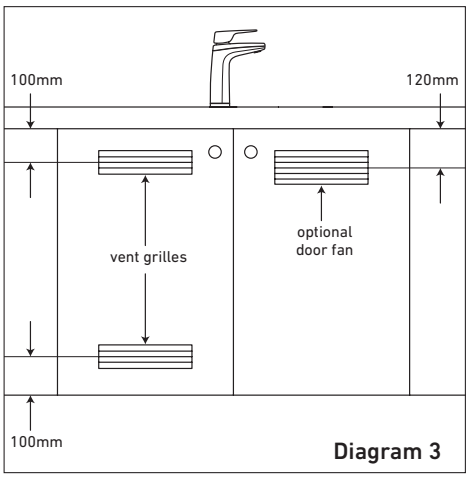

Diagram 3

Installing the dispenser.
XL, XT, XR.

IMPORTANT: This Billi appliance is to be installed by a licensed trades person in accordance with AS/NZS 3500.1 and AS/NZ 3500.2 and in compliance with applicable state regulatory requirements. For correct operation of this appliance, it is essential to observe the manufacturer's instructions.

1. Install Dispenser Assembly

Determine position of dispenser mounting hole in sinktop or benchtop. Dispenser base template (Diagram 4) may be cut out and used to assist in correct positioning. Refer to Diagram 2 for clearances allowed. Hole size required is ø32mm.

—Stainless Steel Sinktop

A suitable 32mm hole punch (Part no: 857901) is available as an accessory from Billi Australia Pty Ltd. If possible, cut hole with die mounted below the sinktop surface so that burr is pulled downwards. Alternatively, remove burr and radius edge of hole with fine file. This allows barbed dispenser mount to slide smoothly into mounting hole.

—Timber/Laminate Benchtop

Maximum benchtop thickness is 50mm. Cut 32mm hole in appropriate position*. When drilling through a particle board bench top, take care to avoid a large chip breaking away as drill breaks through underside surface. We recommend drilling a small pilot hole through benchtop, partially drilling the 32mm hole from underneath and then completing drilling the hole from above. The large 30mm washer supplied may be used to secure barb where underside particle board bench top has chipped away.

* For granite or marble bench tops we recommend you use a certified stone mason to pre-drill the hole.

2. Activate Dispenser Swivel Feature

To activate the swivel feature of your dispenser, you will need to remove the locking piece from the dispenser base. Simply push out the piece as show in Diagram 5. This will allow the tap to move 45 degrees to the left and right.

3. Fit Dispenser Base

a. Cut a 32mm hole in sinktop or benchtop. Remove burr if protruding upwards.
b. Push barbed mounting shaft through mount hole.
c. Insert barb locking bush as shown in Diagram 6. Finger tighten nut.
d. Ensure barb is centred in mount hole before tightening. Check position of base ring and gasket.
e. Moderately tighten locking nut using multigrips or spanner. Take care to avoid overtightening nut which may break the plastic threaded shaft.
f. Place large D washer over thread as shown in Diagram 7.

4. Fit Dispenser Head Assembly

a. Feed dispenser tubing and loom through centre hole in the following order:
   i. Dispenser power cord.
   ii. Silicone tubes
b. Gently pull hoses from under the bench top, do not attempt to force tubing through with a pointed object as silicone tube is easily punctured. Check tubing is not kinked or twisted.
c. Turn dispenser head assembly to approximately 60° from the straight ahead position of dispenser base. Slide head assembly onto base assembly whilst gently pulling tubing downwards from underneath to prevent tubing bunching and kinking. Mounting lugs will pass nut and slide down the 3 grooves on the swivel bearing.
d. Once fully down, turn dispenser to straight ahead position. Fit chrome plated M4 retaining screw to lower rear threaded hole and tighten using the allen key supplied. If swivel feature is activated, check dispenser now swivels smoothly 45° in each direction.

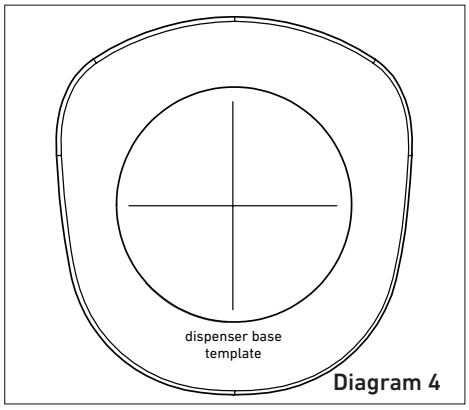

Diagram 4

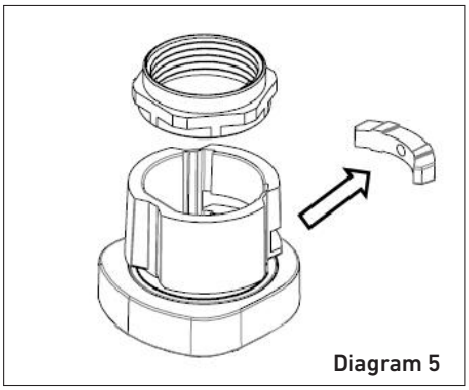
Diagram 5

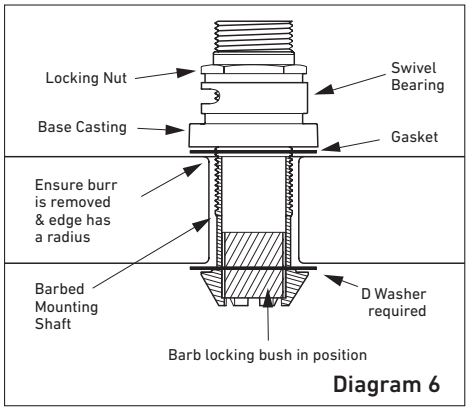

Diagram 6

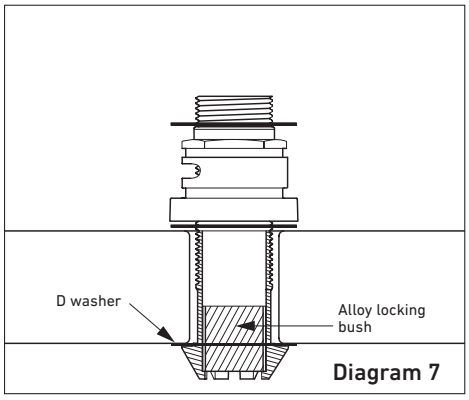

Diagram 7

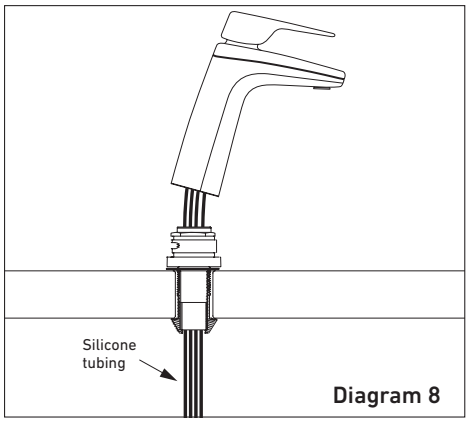

Diagram 8

Additional installation – XR.
Flush mount remote panel.

Determine Remote Panel Location

Dimensions and layout are shown in diagram 9. Panel can be installed on a wall, benchtop or even inside a cupboard

Minimum cut out dimensions are 121mm height x 70mm width. Minimum depth must be 20mm.

Cut out cavity into the plaster wall.

Ensure the cable is pre-installed into the flush mount bracket before plastering.

Place the flush bracket into the plaster wall with the cable gap facing towards the ground.

Installing the Remote Panel

Cable must be protruding out of the bottom of bracket – **see diagram 9.**

Tape up the cable terminals before plastering process – **see diagram 10.**

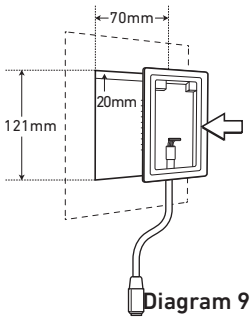

Diagram 9

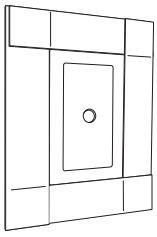
Diagram 10

Plaster and Paint

Start plastering as required.

Wait for the plaster to dry before cleaning the bracket.

Use a light sandpaper to give smooth finish on the drywall.

Then paint as required.

Completing Installation

Take the tape off the cable connector and plug it into the panel – **see diagram 11**

The panel and bracket are magnetic. Upon install, the magnets will pull together and secure the module into place in place – **see diagram 11.**

Installation is finished – **see diagram 12.**

Magnetic remover tool may be required again. Do not throw away.

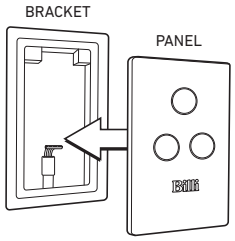

Diagram 11

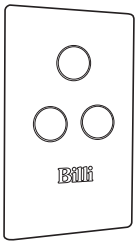
Diagram 12

Additional installation – XR.
Proud mount remote panel.

Determine Remote Panel Location

Cut out cable access hole in the desired location.

Hole size must be Width 25mm x Height 45mm – **see diagram 13.**

Drill a pilot hole using bracket as a template. The template could also be used as a guide to cut into the plaster.

Install Mount Bracket

Fasten the mount bracket on to the wall using phillips head screwdriver (ensure the spring clips are facing up) – **see diagram 14.**

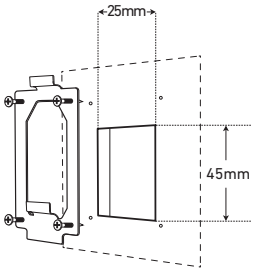

Diagram 13

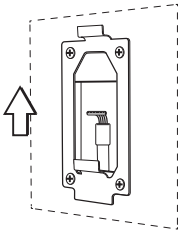
Diagram 14

Install Cabling

Feed the cable through pre cut hole.

Screw and fasten the cable strain bracket to the back of remote tap module.

Secure the tap module by sliding it onto the previously installed bracket – **see diagram 15.**

Completing Installation

Ensure panel is secured.

Clean up any excess plaster.

Installation is finished – **see diagram 16.**

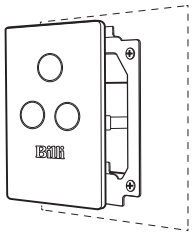
Diagram 15

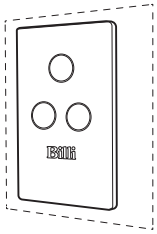
Diagram 16

Installing underbench module.
XL, XT, XR.

1. Flush Water Supply

Flush water supply pipework before installing the underbench unit by connecting 600mm flexible braided hose to the supply tap and running water into a bucket. Blockages/unit malfunction caused by debris are not covered under warranty.

2. Install Underbench Unit

Take care to observe minimum clearances. Ensure there is adequate access to service the unit, taking into account the tube lengths and space available Refer Diagram 1, page 2.

3. Connect Dispenser Tubing and Electrical Plug

Connect all tubing and electrical plug as shown. For Quadra Compact – refer to Diagram 8. For Quadra 420 to 4180 – refer 17a to Diagram 9. For Quadra Plus 5, Plus 9 and Plus 15, refer to Diagram 17b and additional instructions on the following page.

Ensure correct orientation of dispenser power plug before insertion. Trim tubes to correct lengths using a sharp knife or plastic tube cutter. Do not leave excess tubing which will sag, trapping water. Fit spring clamps supplied to retain silicone rubber tubing to barbed fittings.

IMPORTANT: Boiling outlet (red), vent tube (grey) must not be kinked and must be installed with a continual fall and no sag.

4. Connect Condenser Drain Kit

a. Drill ½ inch hole (using drill bit not provided) into drainage point (pipe).
b. Clip white john guest fitting into sliver hose clamp.
c. Fit hose clamp to drainage pipe, ensuring the while john guest fitting surrounds the hole drilled.
d. Take the drain hose connection provided and connect the 3/8 hose into the drain clamp.
e. Connect the 3/16 hose into the condenser outlet on the unit and tighten the nut. (Nut to be finger tightened only).

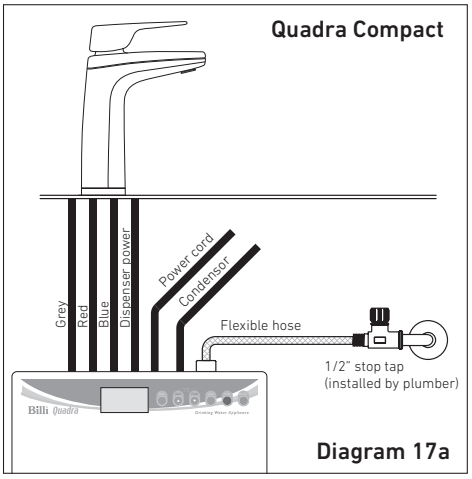

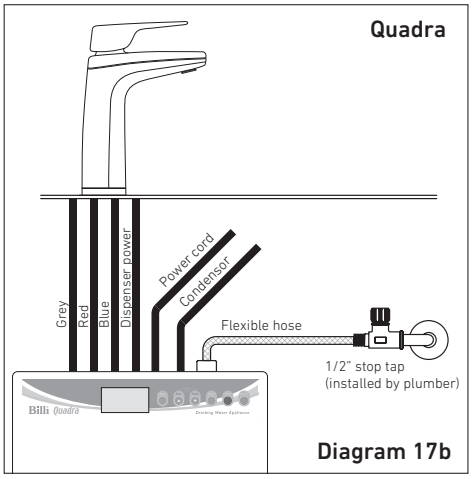

Top View

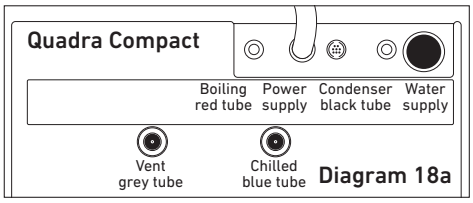

Top View

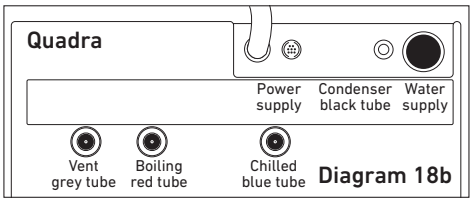

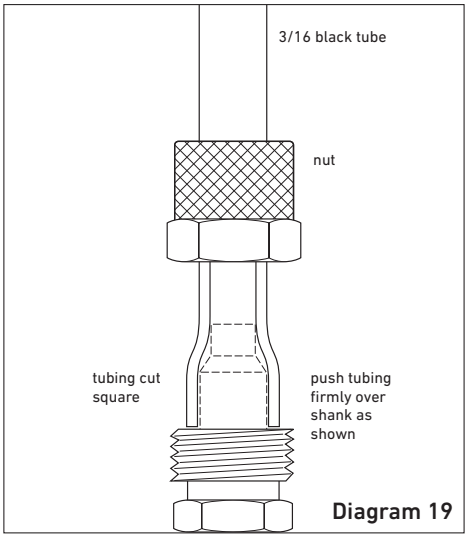

Installing Quadra Plus mixer tap. XL, XT, XR.

Additional Components for Billi Quadra Plus 5, Plus 9 and Plus 15 Models

Before commencing installation, identify the following components:

1. O-ring (large)
2. Tap base ring
3. Mount clamp (brass)
4. Mount clamp plate gasket
5. Mount thread
6. Extended fixing nut
7. Barb adaptor fitting (short)
8. Barb adaptor fitting (extended)
9. Spring hose clamps x 2
10. ½" joining nipple
11. 1 metre PVC tubing
12. Braided flexible hoses x 3
    i. Marked 'TAP-H'
    ii. Marked 'TAP-IN'
    iii. Marked 'TAP-OUT'
13. Mixer Tap

Mixer Tap Mounting Procedure

1. Drill or punch mount hole and deburr.
   – Hole size: 35mm.
   – Sink or Benchtop thickness: 1 – 45mm.
2. Screw in 35mm brass mounting thread into the bottom of the mixer.
3. Insert tap base ring over mounting thread. Ensure it is flush against the tap body with inset O-ring facing down.
4. Screw barb adaptor fitting (extended) marked 'TAP-H' into marked 'H' threaded hole in base of mixer tap.
5. Insert mixer tap through the mount hole and place tap in correct position with Billi logo facing front.
6. Insert the large O-ring, followed by mount clamp plate gasket. Finally insert the brass mount clamp with 2 locking screws. See diagram 20.
   NOTE: Ensure that the grooves from the mount clamp plate gasket are inserted into the channel of the brass mount clamp.
7. Hand tighten the fastening assembly until it is quite firm. Using a philips head screw driver tighten both locking screws until the dispenser is firmly secured. See diagram 20.
8. Insert braided flexible hose marked 'TAP-OUT' into marked 'OUT' threaded hole into base of mixer tap. Screw in clockwise until tight.
9. Insert braided flexible hose marked 'TAP-IN' into marked 'IN' threaded hole into base of mixer tap. Screw in clockwise until tight.
10. Push PVC tubing onto barb and fit spring hose clamp. Position hose clamp lugs as shown in Diagram 21.

Connecting Mixer Tap to Quadra Plus

Fit tubing connections as shown in Diagram 22a & 22b.

1. Water supply inlet tube marked 'TAP-IN' incorporates an inline strainer. Connect to ½" BSP stop tap.
2. Fit short barb adaptor to port at the rear of Quadra unit marked 'Hot Outlet'. Trim PVC tubing to correct length using sharp knife. Excess tubing will cause sagging and possible kinking. Push tube onto barb adaptor and fit spring hose clamp. Support may be needed for PVC tube if there is a horizontal run.
3. Fit braided coupling marked 'UNIT HOT-IN' to matching port. Join to braided coupling marked 'TAP-OUT' using ½" joining nipple.

Operating the Mixer Tap

Operation of the mixer tap is as with any single lever tap. Lift lever to start water flow. Swing to the left for hot water and to the right for cold water.

Hot water will not be available until Quadra boiling water tank has filled and heated Bubbling in the hot water flow indicates insufficient boiling water is available. Wait a few minutes for tank to fill and heat.

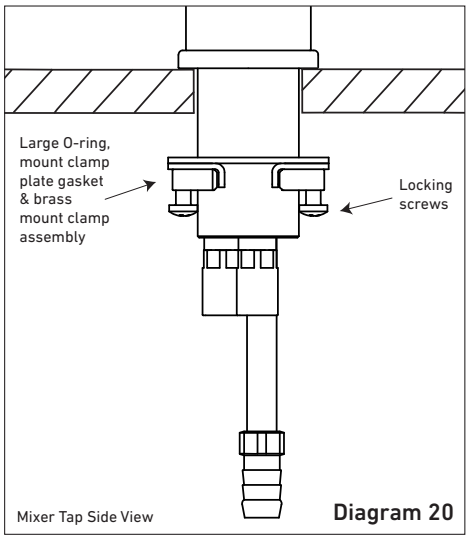

Mixer Tap Side View **Diagram 20**

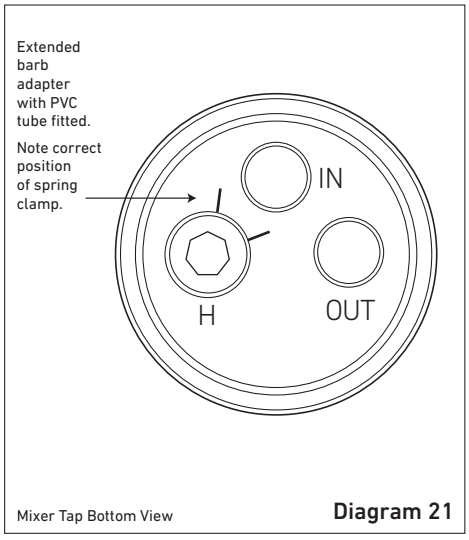

Mixer Tap Bottom View **Diagram 21**

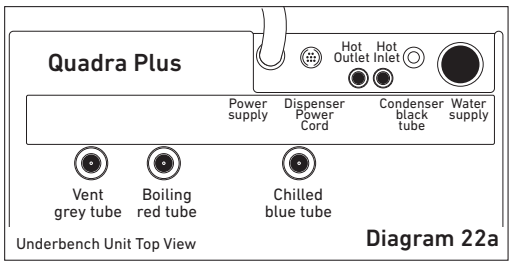

Underbench Unit Top View **Diagram 22a**

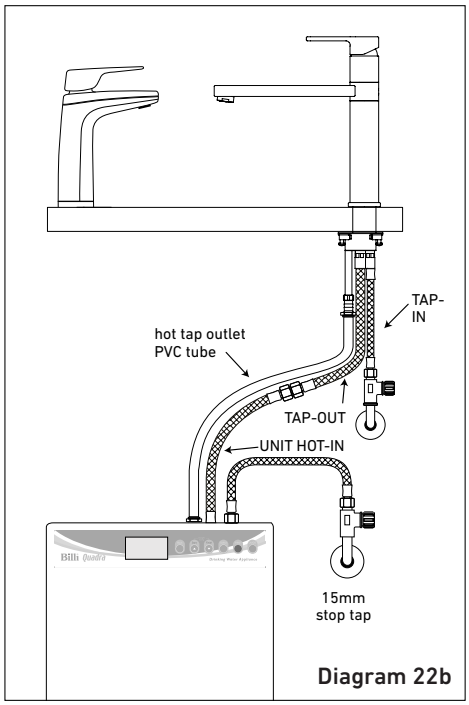

Diagram 22b

Commissioning
XL, XT, XR.

Turn on Water Supply
Turn on the water supply tap and check there are no leaks. Remove font panel of unit and remove foam packing from under the filter canister. Ensure filter canister is securely locked back into place. Replace font panel.

Turn On Electricity
Turn on power switch. Check normal time display is showing. Status line should display 'INITIAL FILL'. Boiling and chilled water tanks are now filling. Dispenser icons flash orange slowly.

Cold Water
During the initial fill, cold water valve automatically opens to fill the cold tank. After approximately 1 minute, cold water will begin to flow from the dispenser outlet. Water will continue to run for a further minute to flush and condition the filters.

Hot Water (Auto Boiling Calibration)
Auto Boiling Point Calibration: The hot tank will first fill to the height of the low level sensor. The water is then heated until it reaches boiling point. The unit will continue to boil for up to 30 seconds while the temperature sensor calibrates.

WARNING: Steam and small amount of hot water may be discharged from the taps and vent during this period. While calibration is underway the hot water indicator will flash yellow. The hot water set point is calibrated 1.5°C below the boiling point. Once calibrated, the unit will resume normal operation and the calibration data will be saved. The unit will not re-calibrate under normal circumstances.

Setting the Programs
The Quadra operational settings have been factory set for a typical installation. Clock is set to Eastern Standard Time (EST). Refer to Quadra User Guide for setting instructions. In some installations, boiling water delivery settings may need to be changed as outlined below.

Tube length setting
The Quadra's boiling water flow rate slows briefly as water first enters the cup to prevent splashing. Correct timing of the moment of reduced flow is dependent on the length of the tube between the Quadra module and the dispenser. The standard timing is set for a tube length of 500mm but this setting can be simply altered to suit the installation. After installation, measure the length of the red tube from the underside of the dispenser to the boiling water outlet fitting. If the measured length is less than 450mm or greater than 550mm, the correct value should be set in as follows:

1. Press ● SELECT. Display changes to menu selection mode.
2. Press ▼ 4 times. Shaded cursor shows 'INITIAL SETUP'.
3. Press ● SELECT. Display shows:

4. Press ● SELECT. '0500 mm' flashes.
5. Press ▲ or ▼ buttons to enter the correct tube length.
6. Press ● SELECT.
7. Press ● BACK twice to return to normal display.

Boiling water flow rate
The boiling water flow rate can be adjusted to suit the installation or user preference. Extended tube lengths will require the pump speed to be increased.

1. To adjust, use the selection procedure as described above in Steps 1, 2 and 3.
2. Press ● SELECT. Shaded cursor shows 'Pump Speed 015'.
3. Press ● SELECT. '015' flashes.
4. Press ▲ or ▼ buttons to increase or decrease. Range is between 1 and 20.
5. Press ● SELECT.
6. Press ● BACK twice to return to normal display.

Calibrating boiling water temperature (Manually)
The boiling water temperature has been factory calibrated. Because water boils at a slightly lower temperature at elevated altitudes, the factory-set temperature may be too high for units installed at certain inland locations. If the local altitude is greater than 500 metres above sea level, a calibration cycle should be performed.
The procedure is as follows;

1. Use the selection procedure as described above, in Steps 1, 2 and 3.
2. Press ● SELECT twice to select 'Calibrate Boiling Water'.
3. Press ● SELECT twice to begin cycle.
4. The unit will fill and heat (if not yet up to operating temperature before cycle begins).

CAUTION: Steam will discharge from the vent outlet located between the hot and cold water outlets. Once correct boiling temperature is established, the Quadra recalibrates its internal settings and the display panel returns to normal.

Commissioning XL, XT, XR.

INSTALLATION AND COMMISSIONING CHECKLIST

- ☐ Filter packing foam removed from under filter cannister.
- ☐ Dispenser mounted securely – M4 chrome retaining screw fitted.
- ☐ Dispenser swivels 45º in each direction (if activated) - locking piece is removed.
- ☐ Tubing is cut to correct lengths and not kinked or sagging. Red, grey and blue silicone tubes have a continual fall.
- ☐ Tubing not twisted or kinked.
- ☐ Tubing secured correctly – nuts and spring clips.
- ☐ Water main flushed before connection to unit.
- ☐ Unit connected to COLD water supply.
- ☐ Correct air clearances around unit.
- ☐ Power circuit fitted with an RCD – earth leakage protection device.
- ☐ Sawdust cleaned out of cupboard area.
- ☐ Door vents fitted correctly (air-cooled models only).
- ☐ Initial program settings correctly set for dispenser tube length.
- ☐ Time (check if daylight savings), day and date set correctly – Refer to Quadra User Guide.
- ☐ Unit heating and cooling (after initial fill). Red and blue dispenser icons flashing (or on continually when reached correct temperature).
- ☐ Boiling and chilled water flow correct.

If any difficulties arise contact Billi Australia Pty Ltd: Phone 1800 812 321 (Free call). Validate your warranty online at www.billi.com.au

For information on our filtration and service contracts please contact Billi Customer Service on 1800 812 321 or service@billi.com.au.

WARNINGS. ⚠

For continued safety of this appliance it must be installed, operated and maintained in accordance with the manufacturer's instructions.

—Your appliance should be installed by a suitably qualified tradesperson.

—For correct operation of this appliance it is essential to observe the instructions as outlined in this booklet.

—Do not use this appliance with water that is microbiologically unsafe or with water of unknown quality without adequate disinfection before or after the system. Systems certified for cyst reduction may be used on disinfected water that may contain filterable cysts.

—Filter replacement must be performed at intervals of not more than 12 months.

—Use this appliance only as directed in these instructions and only for its designed purpose.

—This appliance is not intended for use by persons (including children) with reduced physical, sensory or mental capabilities, or lack of experience and knowledge, unless they have been given supervision or instruction concerning use of the appliance by a person responsible for their safety.

—Children should be supervised to ensure that they do not play with the appliance.

—DANGER: The operation of the thermal cut-out indicates a possibly dangerous situation. Do not reset the thermal cut-out until the water heater has been serviced by a qualified person.

—WARNING: Do not connect any restrictor or pressure relief device to the vent pipe of this water heater if installed.

—If the supply cord is damaged, it must be replaced by the manufacturer, its service agent or similarly qualified persons in order to avoid a hazard.

—New hose-sets supplied with the appliance are to be used and old hose-sets should not be re-used.

— WARNING: This appliance may deliver water at high temperature. Refer to the plumbing code of Australia (PCA), local requirements and installation instructions to determine if additional temperature control is required.

—WARNING: Installation shall conform to the plumbing code of Australia (PCA).

Billi Australia Pty Ltd
42 Lucknow Crescent, Thomastown
Victoria 3074 Australia

Telephone 1800 812 321

www.billi.com.au

Designed and manufactured in Australia.

As Billi Australia Pty Ltd has a policy of continual improvement, all details are subject to change without notice. All goods are sold subject to our published terms and conditions. Billi is a registered trademark. 1220