L2WCP500 Series

500W, 120-277Vac Input, Programmable Constant Power LED Driver

RoHS Compliant

Features

- Power Rating: 500W
- Input Voltage: 120-277Vac
- Constant current and constant voltage hybrid output
- Output current (530mA-11900mA)
- Output current programmable with Near Field Communication controller
- Efficiency to 95%
- Compatible with 0-10V, PWM, Timer, Dim-to-off option, Isolated Dimming, 12V/200mA AUX
- UL/Class P
- OCP, SCP, OVP, and OTP
- IP67
- 5-year warranty
- Surge Protection: Diff: 6kV, Common: 10kV

*Product images are for illustrative purposes only and may vary from actual design.

Application

- Indoor and outdoor applications

Model List*(See part number scheme for model number details)

Model Number	Input Voltage Range	Output Power	Output Voltage	Output Current Min.	Output Current Max.	Efficiency 277Vac	Certification
L2WCP500S1190ST-XYZ-H	120-277Vac	500W	25-48V	4760mA	11900mA	95%	UL/cUL
L2WCP500S1042ST-XYZ-H	120-277Vac	500W	28-56V	4170mA	10420mA	95%	UL/cUL
L2WCP500S781ST-XYZ-H	120-277Vac	500W	38-80V	3130mA	7810mA	95%	UL/cUL
L2WCP500S446ST-XYZ-H	120-277Vac	500W	67-140V	1790mA	4460mA	95%	UL/cUL
L2WCP500S357ST-XYZ-H	120-277Vac	500W	84-180V	1430mA	3570mA	95%	UL/cUL
L2WCP500S260ST-XYZ-H	120-277Vac	500W	115-240V	1040mA	2600mA	95%	UL/cUL
L2WCP500S208ST-XYZ-H	120-277Vac	500W	144-300V	830mA	2080mA	95%	UL/cUL
L2WCP500S167ST-XYZ-H	120-277Vac	500W	180-375V	670mA	1670mA	95%	UL/cUL
L2WCP500S133ST-XYZ-H	120-277Vac	500W	225-460V	530mA	1330mA	95%	UL/cUL

Ordering options	
XY= Programmable	**Z=Dimming**
FC=Near Field Communication	**D=**DALI Dimming
	B=BLE Dimming
Add -H for heat sink at the bottom, full power output at 120-277Vac Input: L2WCP500SXXXST-XYZ-H	

Technical Data

Input Voltage	90-305Vac, 120-277Vac(typ.)
Frequency	47-63Hz

■ Technical Data(cont.)

Output voltage	24-375V
Output power	500W
Max input current	2.1A @277Vac, 4.6A@120Vac full load condition
Leakage Current	0.75mA @277Vac/60Hz input grounding effectively
Inrush Current	65A @220Vac cold start +25℃
Power Factor	0.9@100-277Vac 60%-100% Load
Efficiency	95%
THD	<20% @100-277Vac 60%-100% Load
Output Current Tolerance	±5%Io set @full load condition
Output Current Ripple (pk-pk)	10%Io max @full load condition, 20 MHz BW
Startup Overshoot Current	20%Io max @ full load condition
No Load Output Voltage	57V
Line Regulation	±1%
Load Regulation	±1%
Turn-on Delay Time	0.8 s(typ.), 1.5 s(max.), Measured at 120Vac input.
Temperature Coefficient of Ioset	±0.03%/°C Case temperature = 0°C ~Tc max
12V Auxiliary Output Voltage	11V(min.), 12V(typ.), 15V(max.)
12V Auxiliary Output Source Current	0mA-200mA; Return terminal is “Dim−“
OTP Tc	85°C(min.), 90°C(typ.), 100°C(max.) Output current will drop to 50%
SCP	Hiccup mode, Auto recover
Standby power	1W, Measured at 220Vac/50Hz; Dimming off
MTBF	234,000 Hours Measured at 220Vac input, 80% Load and 25°C ambient temperature (MIL-HDBK- 217F)
Lifetime	80,000 Hours Measured at 220Vac input, 80%Load and 60°C case temperature; See lifetime vs. Tc curve for the details
Operating Case Temperature Tc	-40°C to 90°C
Operating Ambient Temperature	-40°C to 50°C
Storage Temperature	-40°C to +85°C Humidity: 5%RH to 100%RH
Dimensions	306x98.8x 46.1mm, 12.05x 3.89x1.81in
Net Weight	2.4kg
Absolute Maximum Voltage on the Vdim (+) Pin	-1V(min.), 15V(max.)
Source Current on Vdim (+)Pin	90uA(min.), 100uA(typ.), 110uA(max.)
Dimming Output Range	10%Io set 80%Io max ≤ Io set ≤ 100%Io max 8%Io max Io set ＜80%Io max
Recommended Dimming Input Range	0-10 V

Technical Data(cont.)

Dim off Voltage	0.3 V(min.), 0.5 V(typ.), 0.8V(max.)
Dim on Voltage	0.5V(min.), 0.7 V(typ.), 1 V(max.)
Hysteresis	0.2 V
PWM_in High Level	9.8 V(min.), 10V(typ.), 10.2 V(max.)
PWM_in Low Level	-0.3 V-0.6 V
PWM_in Frequency Range	200Hz-3KHz
PWM_in Duty Cycle	1%-100%
PWM Dimming off	3%(min.), 5%(typ.), 7%(max.)
PWM Dimming on	5%(min.), 7%(typ.), 9%(max.)

Safety Compliance

Safety Standards	UL/CUL UL8750, CAN/CSA-C22.2 No. 250.13-12
EMI Standards	FCC Part 15ANSI C63.4:2009 Class B This device complies with Part 15 of the FCC Rules. Operation is subject to the following two conditions: (1) this device may not cause harmful interference, and (2) this device must accept any interference received, including interference that may cause undesired Operation.
EMS Standards	EN 61000-4-2 Electrostatic Discharge (ESD): 8 kV air discharge, 4 kV contact discharge EN 61000-4-3 Radio-Frequency Electromagnetic Field Susceptibility Test-RS EN 61000-4-4 Electrical Fast Transient / Burst-EFT: level 3, criteria A EN 61000-4-5 Surge Immunity Test: AC Power Line: line to line 4 kV, line to earth 6 kV EN 61000-4-6 Conducted Radio Frequency Disturbances Test-CS EN 61000-4-8 Power Frequency Magnetic Field Test EN 61000-4-11 Voltage Dips EN 61547 Electromagnetic Immunity Requirements Applies To Lighting Equipment

Disclaimer:

Autec Power Systems' (Autec) LED Drivers are Hi-Pot tested during the manufacturing process. Autec assumes no responsibility for secondary Hi-Pot testing at customer location or designated production line(s). Should customer require further Hi-Pot testing, at their own production line, following assembly of the LED Driver into the customer's assembled fixture, Autec requests advance notice. This request must be communicated to Autec in a timely manner and is recommended to be requested at time of issuing each purchase order.

Static Characteristics

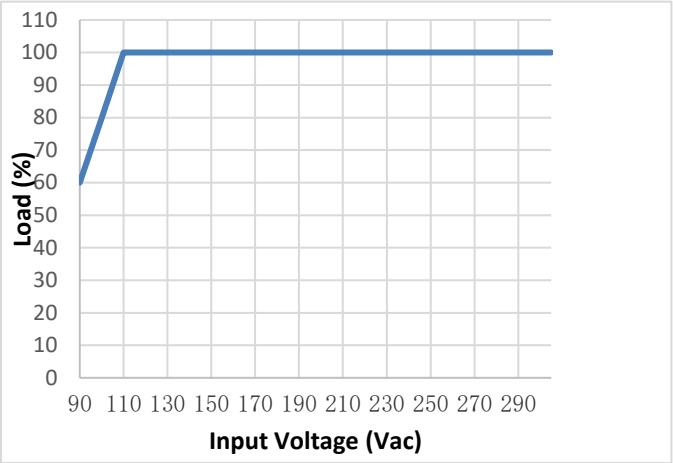

Efficiency vs. Load

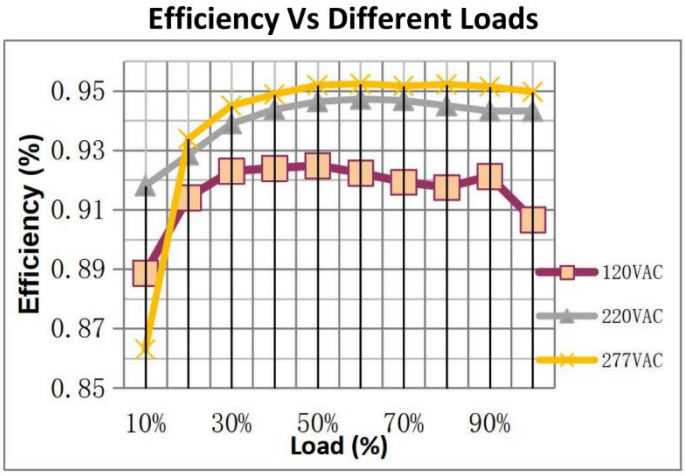

THD vs. Load

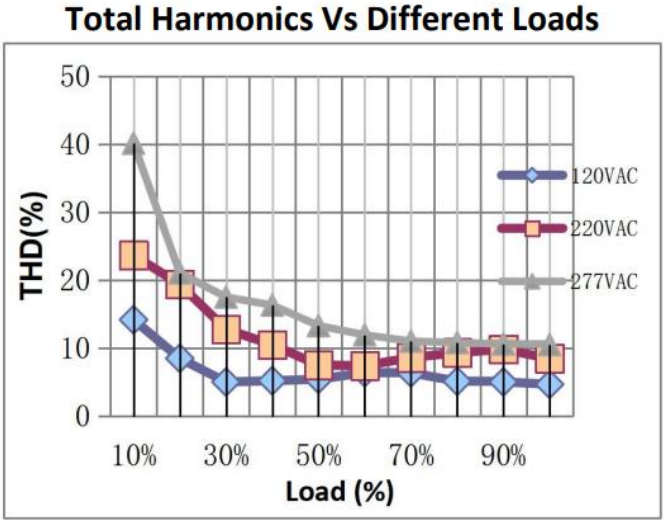

■ Power Factor vs. Load

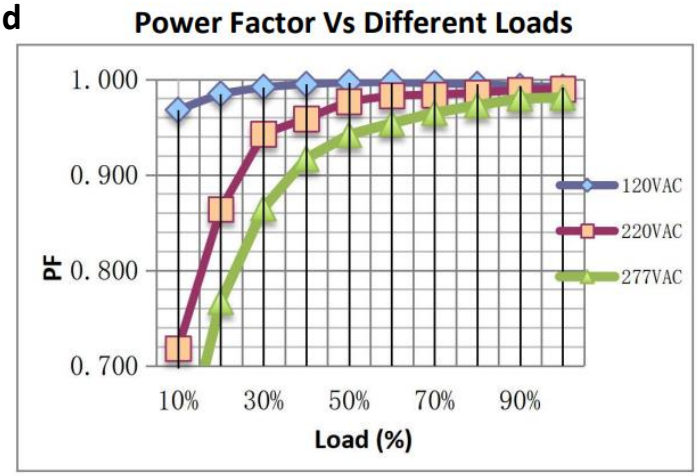

■ Lifetime vs Case Temperature

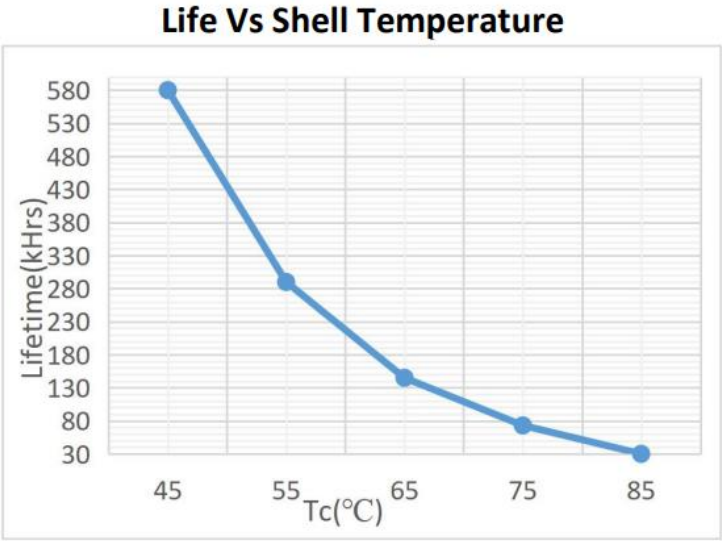

■ Near Field Communication Controller

NOTE:

1. The Near Field Communication controller can program the output current, voltage and timer delays.
2. The Near Field Communication programming is a non-contact process, therefore much safer compared to traditional programming methods.
3. Power devices can be programmed without AC power applied to the driver.

■ Dimming

0-10V Analog Dimming &PWM Dimming

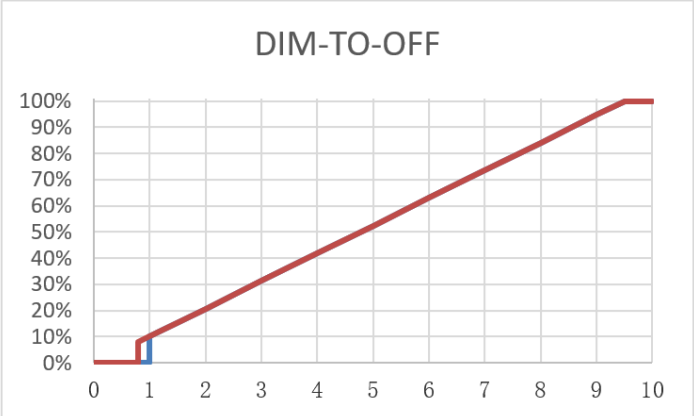

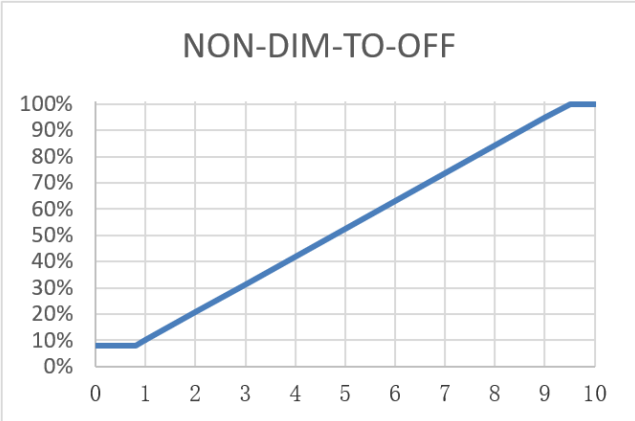

GND	Grey
Dimming wire 0-10V&PWM	Purple
12V AUX	Yellow
Input Dimming Voltage	0-10V
DIM+ Source Current	0.5mA
12V AUX Source Current	200mA
12V AUX output voltage	10-15V
PWM Frequency Range	0.4-10KHZ
PWM high level	>2.3V
PWM low level	<0.8V

NOTE:

1. Io is actual output current and Ir is rated current without dimming control.
2. For the driver to operate properly, the load voltage must be in the working voltage range.
3. We have DIM-TO-OFF option, which can be programmed by the programmer.
4. Maximum input voltage for the dimming wire is 12V.
5. AUX wire is only for source, can't connect to other voltage source.

■ PWM Dimming

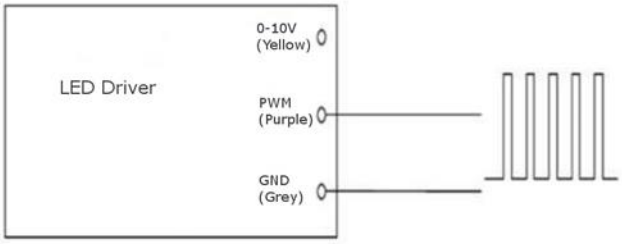

■ TIMER Dimming

NOTE:

1. The dimming time can be programmed by the programmer.
2. The time of t1 and t2 can be set by the programmer.(0.5h step)
3. The value of I1 and I2 can be set by the programmer.
4. Changing the current from I1 to I2 may take a few min.

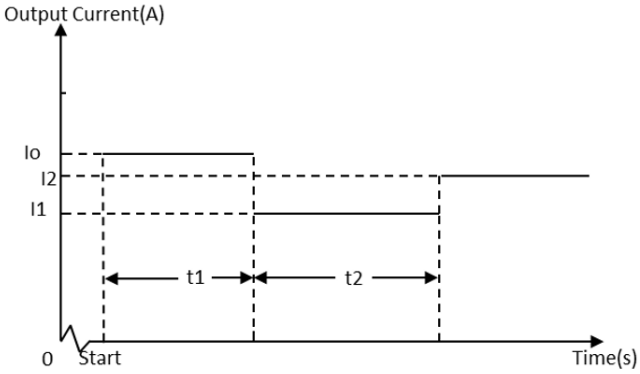

■ Wiring Diagram

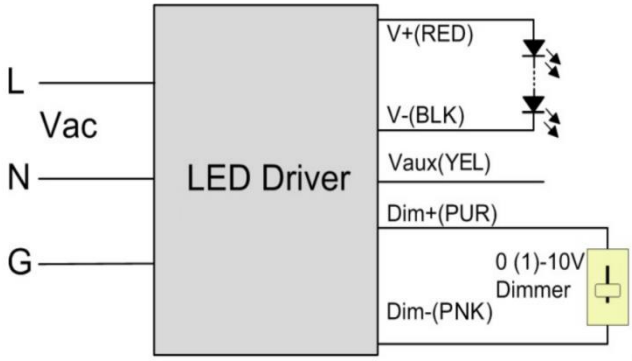

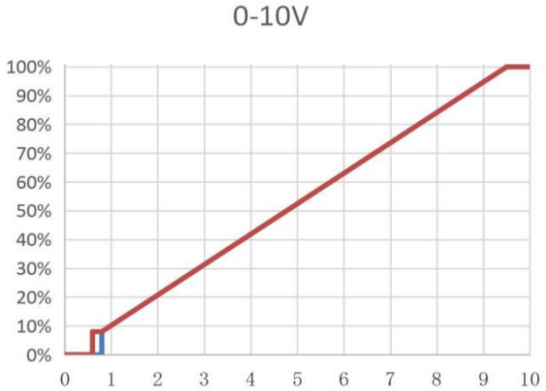

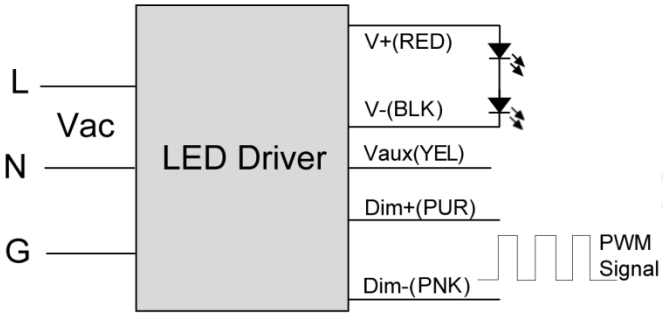

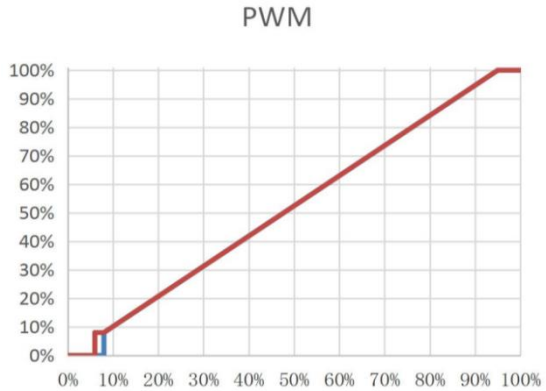

■ Mechanical Design

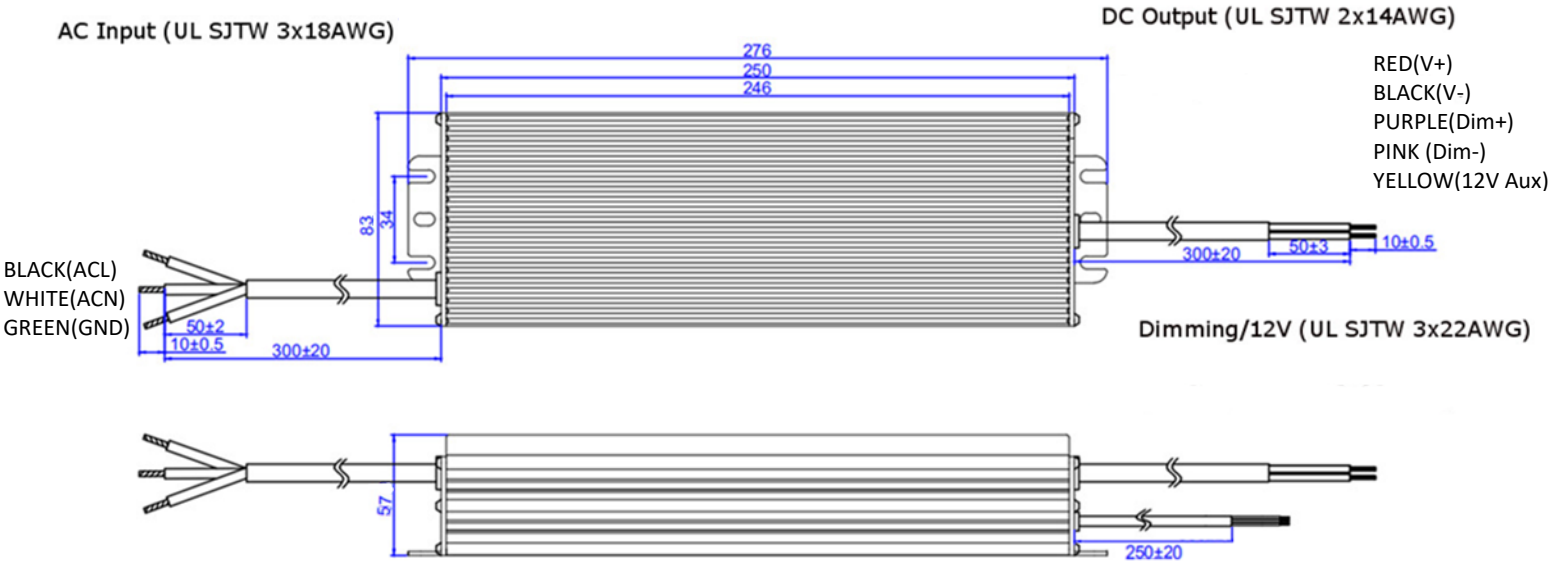

Part Number Scheme

L2 W C P 500 S XXXX S T-XYZ-H

- L2=LED Driver Series
- W=Input Voltage 120-277Vac
- C=Constant Power
- P=Programmable
- 500=Output Power(Watts)
- S=Single Output
- -H=Heat Sink
- -XYZ=Programming and dimming options. *See ordering options table on page 1.
- T=Class I, 3 Wire In
- S=Metal case
- XXXX=Rated Current Ex.) 1190=11900mA 133=1330mA

***Product images are for illustrative purposes only and may vary from actual design.**

***Specifications are subject to change without notice. Autec is not responsible for issues arising from errors or omissions.**

Technical Sales / Customer Service: +1-818-338-7788 • Email: sales@autec.com
31328 Via Colinas Suite 102 • Westlake Village, CA 91362 USA • **www.autec.com**