APSH1KSPXXR(L)REV120VAC Series

800-9000W, 60-145Vac Input, Chassis and Power Supply Rack Online UPS

RoHS Compliant

Features

- Power Rating 800W-9000W
- Input voltage 120Vac (Nom.)
- Rated Output Current(1000-10000VA)
- Efficiency to 90%
- Comes standard with lead acid batteries, other battery types available for custom configurations, Contact Autec Technical Sales
- Double conversion UPS
- High performance DSP based with full digital control
- Pure sinewave output
- Frequency converter operation mode
- Compatible with most generators set
- Embedded input power factor creator
- ECO mode
- Small profile
- Adapts to harsh power conditions
- Other input voltage models available i.e. 220Vac

c UL us Pending

*Product images are for illustrative purposes only and may vary from actual design.

Applications

- Point of Care UPS and battery backup
- IT infrastructure: small servers, routers, workstations, and monitoring equipment
- Automation system: ATM, TVM, SCADA, railway and Metro signal systems
- Office and business equipment: PC, Printer, Scanner, POS, telephones and fax machines

Model List*(See part number scheme for model number details)

Model Number	Output Power	Rated Output Current	Nominal Voltage Per battery Group	Battery Capacity & Quantity	Nominal Input Voltage ±1%	Efficiency
APSH1KSPX1RREV120VAC(**)	800W	1000VA	24V	12V/7AH x2pcs	120Vac	90%
APSH1KSPX1RLREV120VAC	800W	1000VA	36V	External	120Vac	90%
APSH1KSPX2RREV120VAC	1600W	2000VA	48V	12V/7AH x4pcs	120Vac	90%
APSH1KSPX2RLREV120VAC	1600W	2000VA	72V	External	120Vac	90%
APSH1KSPX3RREV120VAC	2400W	3000VA	72V	12V/7AH x6pcs	120Vac	90%
APSH1KSPX3RLREV120VAC	2400W	3000VA	96V	External	120Vac	90%
APSH1KSPX6RREV120VAC	5400W	6000VA	144V	12V/7AH x12pcs	120Vac	90%
APSH1KSPX6RLREV120VAC	5400W	6000VA	192V	External	120Vac	90%
APSH1KSPX10RREV120VAC	9000W	10000VA	192/240V	12V/7AH x16/20pcs	120Vac	90%
APSH1KSPX10RLREV120VAC	9000W	10000VA	192/240V	External	120Vac	90%

(**)"-UL" can be added for models with UL certificate

■ Technical Data

Input System	Single phase (L/N+PE)
Input Voltage Range	60-145Vac
Nominal Input Voltage	120Vac
Frequency	50/60Hz
Frequency Range	40~70)±0.5Hz
Input Power Factor	>0.99
Bypass voltage range	80~140Vac x (1±3%)
Battery Backup time	Half load ≥8 min. Full load ≥3 min.(standard) 800W-2400W Half load ≥6 min. Full load ≥2 min.(standard) 5400W-9000W
Battery Charger Time	Charged to 90% battery capacity in 5 hours (standard) dependent on the capacity of external batteries (long backup time)
Output system	Single phase (L/N+PE)
Inverter Mode Output Voltage	LV: 100/110/120/127Vac±2%
Waveform	Pure Sine Wave THD<3%(linear load) THD<7%(nonlinear load)800W-2400W Pure Sine Wave THD<2%(linear load) THD<5%(nonlinear load)5400W-9000W`
Output Frequency	50/60Hz±4Hz(Sync mode) 50/60Hz±1%(Fix frequency mode)
Dynamic Voltage Transient Range	<9%(800W-2400W) <6%(5400W-9000W)
Dynamic Transient Recovery	<100ms(800W-2400W) <60ms(5400W-9000W)
Overload Capability	105~125%≥60s, 126~150%≥30s, the recovery point is 70%
Crest Ratio	3:1
Transfer Time	Battery <-> Line Mode: 0ms
Communications	RS232 RS485(optional), Dry contact(optional)
Alarm Function	AC/DC input under abnormal, overload conditions, and inverter problems
Protection Function	AC input or output above or below the range of voltage, overload, over temperature, and short circuit protections
Noise	<50dB(800W-2400W) <55dB(5400W-9000W)

Product Specifications are subject to change, contact Autec Sales for more information.

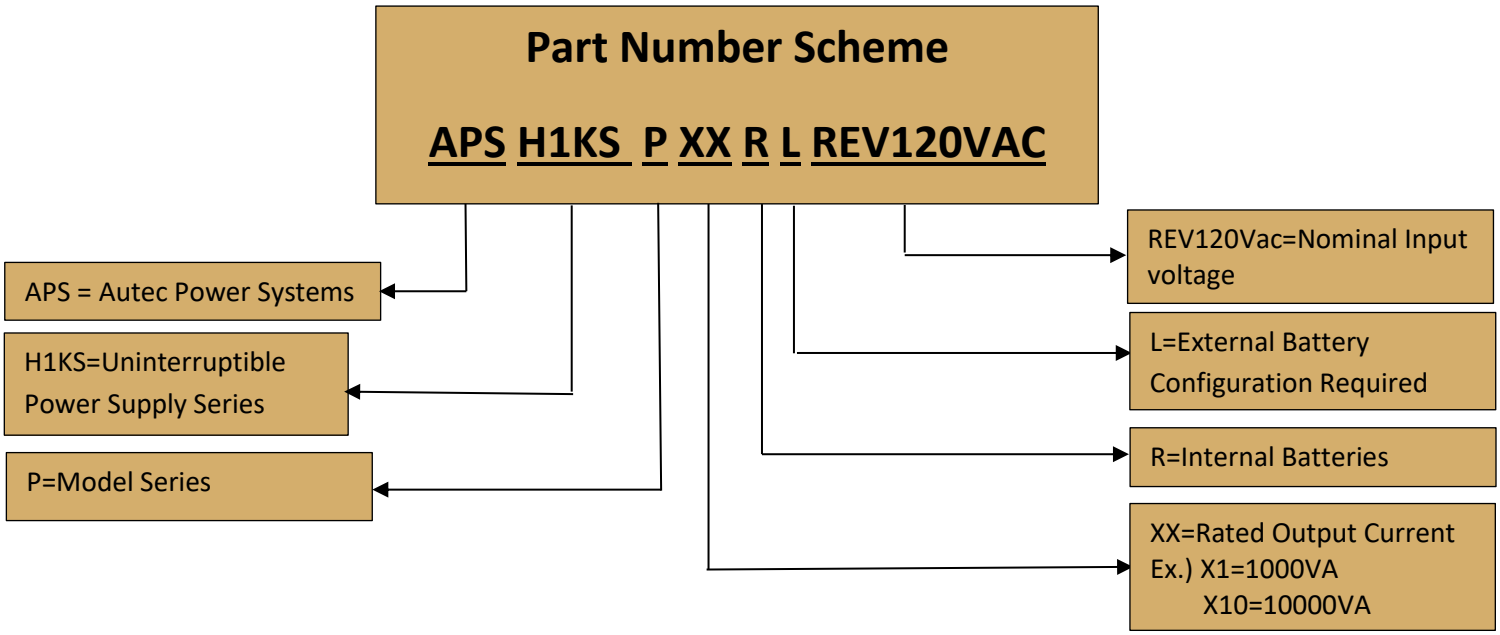

***Product images are for illustrative purposes only and may vary from actual design.**

***Specifications are subject to change without notice. Autec is not responsible for issues arising from errors or omissions.**

Date	Revision Number	Change Description	Sign

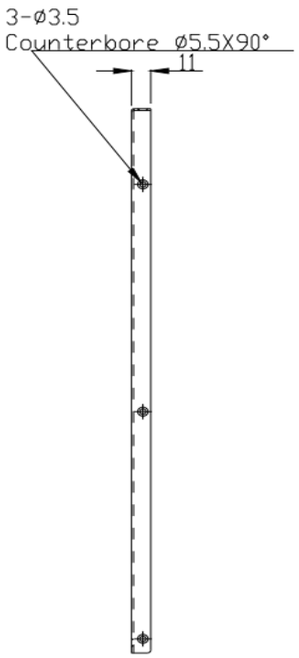

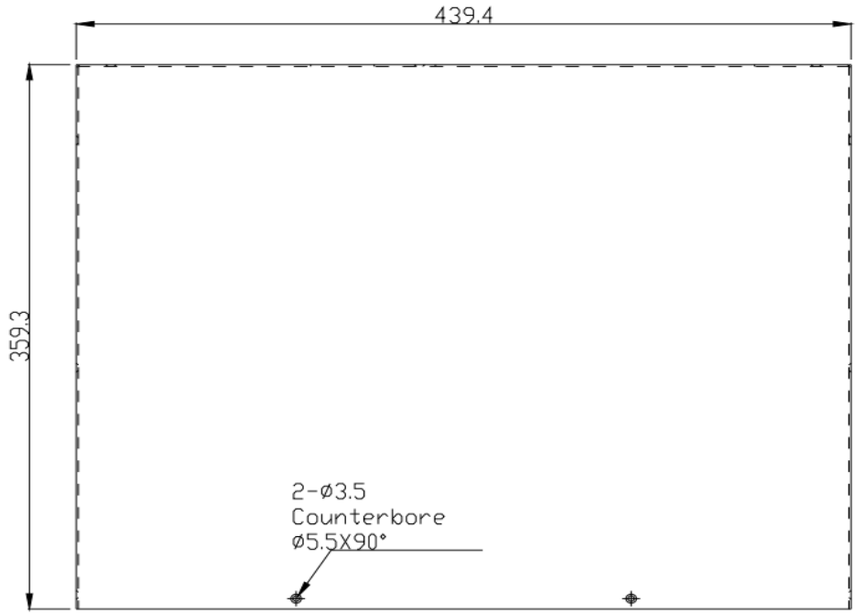

SCALE 3:10

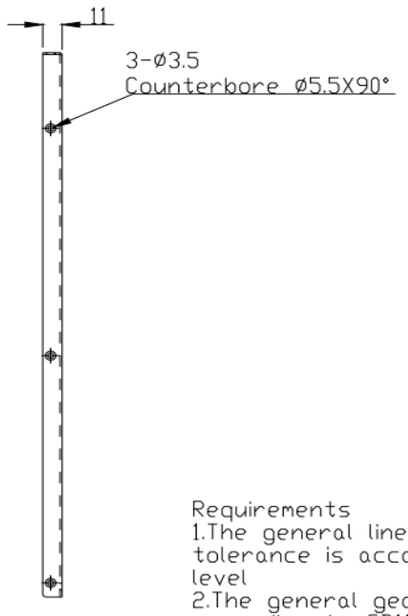

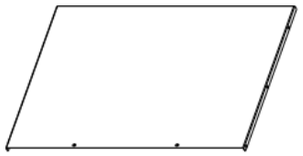

Scale 1:10

Requirements
1.The general linear dimension tolerance is according to GB1804-m level
2.The general geometric tolerance is according to GB1184-K
3.There must be no surface defects such as scratches
4.Remove sharp edges and sharp angles, remove oil stains
5.Radius of inner corner of unbent bend R0.5
6.The inner angle of the unbent bend 5.5X90°
7.Unfilled round radius R2
8.Pay attention to the first angle projection

AUTEC POWER SYSTEMS

Projection:		Unit:	mm	Surface Treatment:	PANTONE BLACK C
		Proportion:		Material:	SECC T=1.2
Design:		Format:	A3	Name:	Top Cover
Audit:	*	Version:	A		
Standardization:	*	Product:		Part No:	373-10033-00
Approval:	T. Moody	1st	Photo 1		

File Name:
483-0003-00

Date	Revision Number	Change Description	Sign

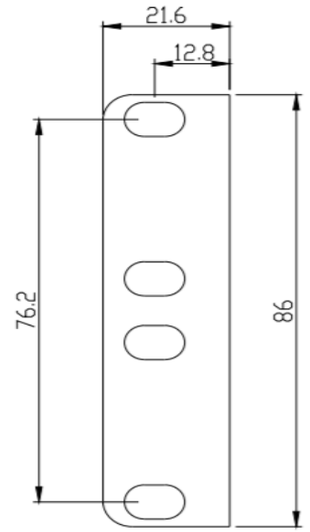

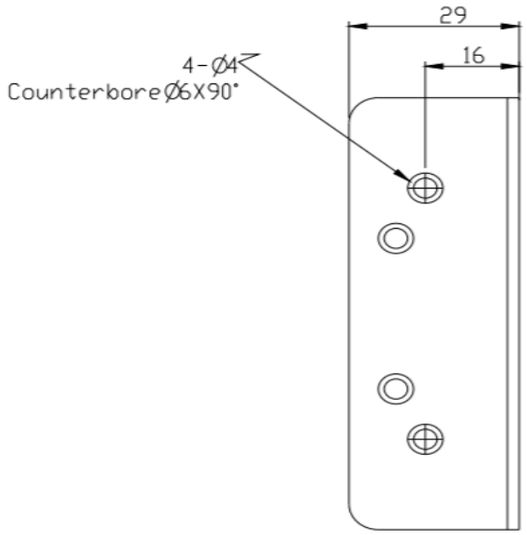

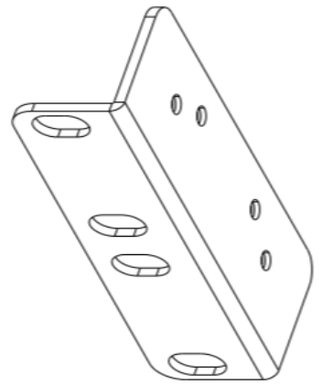

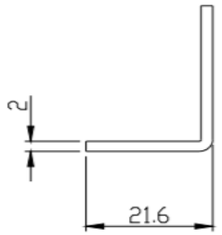

Requirements
1.The general linear dimension tolerance is according to GB1804-m level
2.The general geometric tolerance is according to GB1184-K
3.There must be no surface defects such as scratches
4.Remove sharp edges and sharp angles, remove oil stains
5.Radius of inner corner of unbent bend R0.5
6.The inner angle of the unbent bend 5.5X90°
7.Unfilled round radius R2
8.Pay attention to the first angle projection

AUTEC POWER SYSTEMS

Projection:	Unit: mm	Surface Treatment: PANTONE BLACK C	
	Proportion:	Material: SECC T=1.2	
Design:	Format: A3	Name: Mounting Ear	
Audit: *	Version: A		
Standardization: *	Product:	Part No: 373-10034-00	
Approval: T. Moody	1st Photo 1		

File Name: 483-0007-00

Date	Revision Number	Change Description	Sign

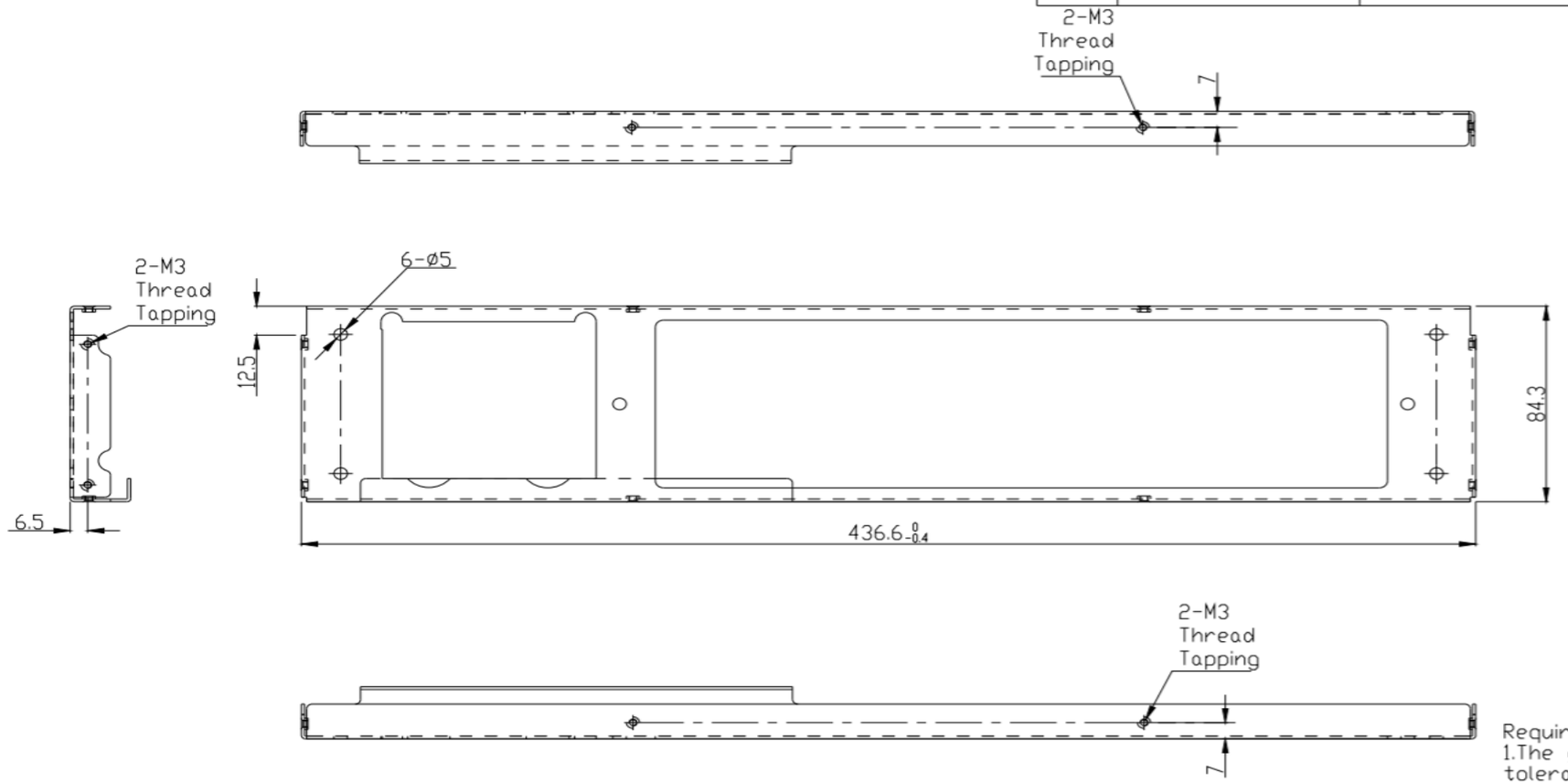

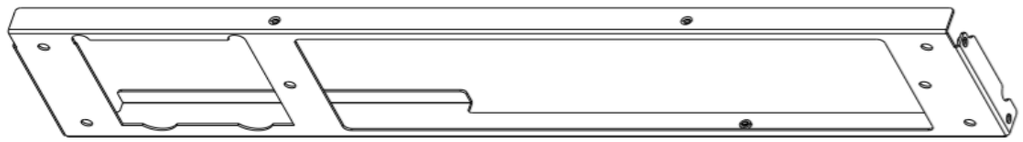

Scale 2:5

Requirements
1.The general linear dimension tolerance is according to GB1804-m level
2.The general geometric tolerance is according to GB1184-K
3.There must be no surface defects such as scratches
4.Remove sharp edges and sharp angles, remove oil stains
5.Radius of inner corner of unbent bend R0.5
6.The inner angle of the unbent bend 5.5X90°
7.Unfilled round radius R2
8.Pay attention to the first angle projection

AUTEC POWER SYSTEMS

Projection:		Unit: mm	Surface Treatment: PANTONE BLACK C
		Proportion:	Material: SGCC T=1.2
Design:		Format: A3	Name: Front Cover
Audit:	*	Version: A	
Standardization:	*	Product:	Part No: 373-10035-00
Approval:	T. Moody	1st Photo 1	

File Name:
483-0004-00

Date	Revision Number	Change Description	Sign

A:4-BSO M3*13

B:2-STUD FH-M4-12

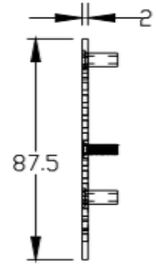

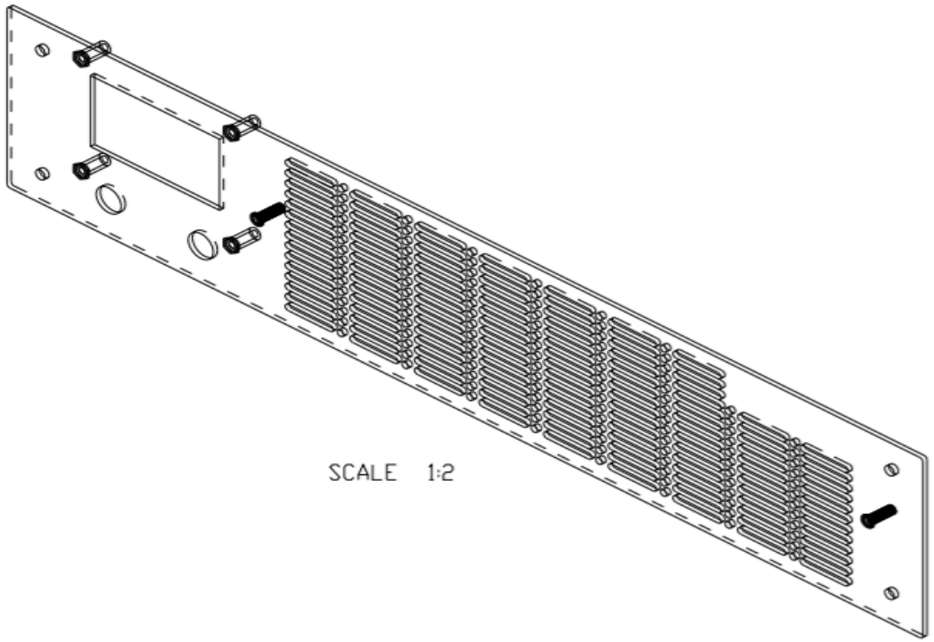

SCALE 1:2

Requirements
1.The general linear dimension tolerance is according to GB1804-m level
2.The general geometric tolerance is according to GB1184-K
3.There must be no surface defects such as scratches
4.Remove sharp edges and sharp angles, remove oil stains
5.Radius of inner corner of unbent bend R0.5
6.The inner angle of the unbent bend 5.5X90°
7.Unfilled round radius R2
8.Spray Color Plate
9.Pay attention to the first angle projection

File Name: 373-TB_Cover

AUTEC POWER SYSTEMS

Projection:		Unit:	mm	Surface Treatment:	PANTONE BLACK C
		Proportion:		Material:	SGCC 2.0T
Design:		Format:	A3	Name:	Panel
Audit:	*	Version:			
Standardization:	*	Product:	Rack	Part No:	373-10036-00
Approval:	T. Moody	1st	Photo 1		

Date	Revision Number	Change Description	Sign

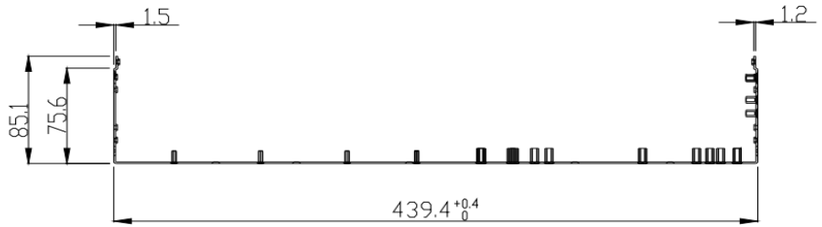

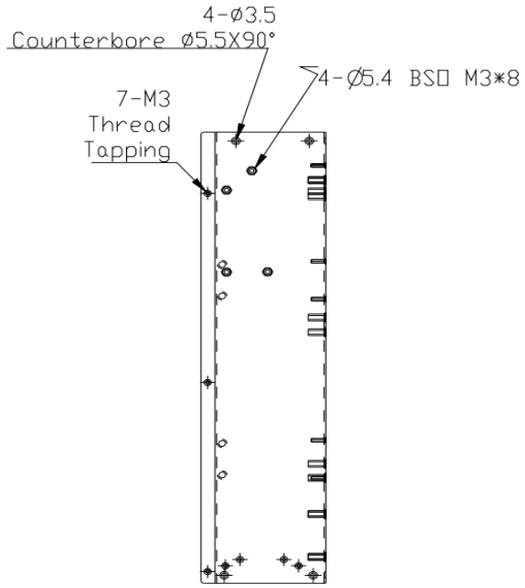

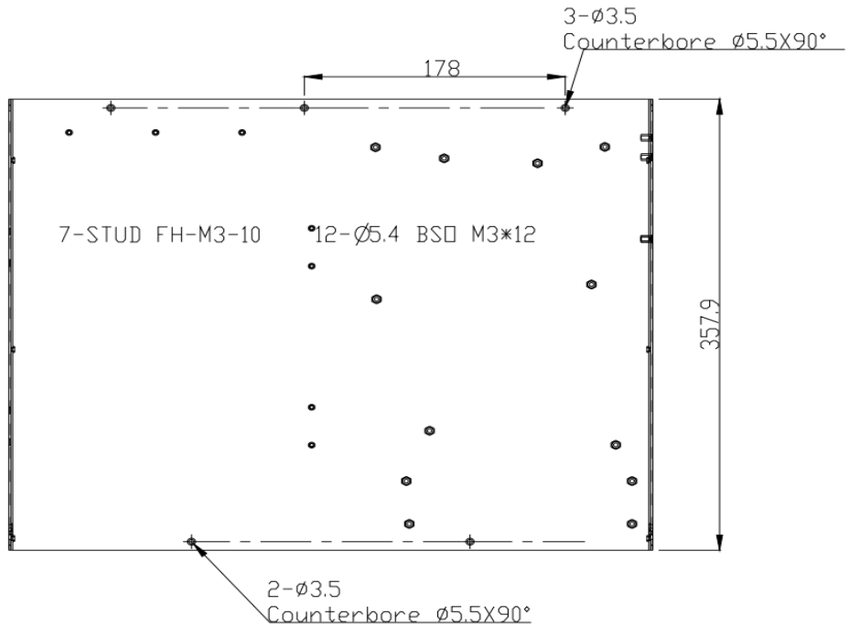

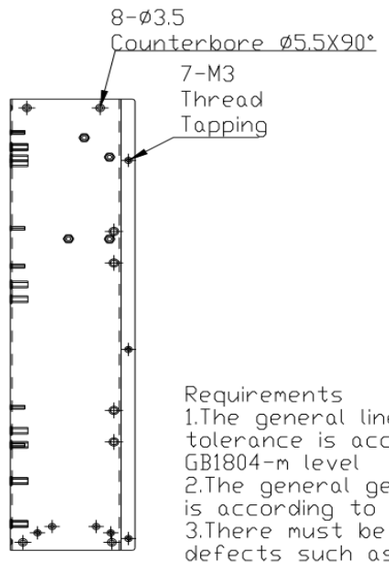

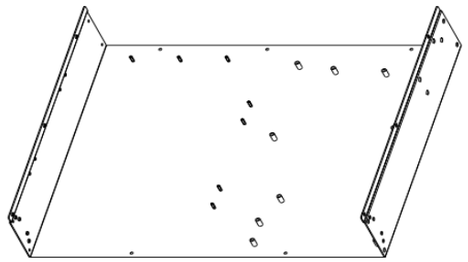

Requirements
1.The general linear dimension tolerance is according to GB1804-m level
2.The general geometric tolerance is according to GB1184-K
3.There must be no surface defects such as scratches
4.Remove sharp edges and sharp angles, remove oil stains
5.Radius of inner corner of unbent bend R0.5
6.The inner angle of the unbent bend 5.5X90°
7.Unfilled round radius R2
8.Pay attention to the first angle projection
9.No Spraying

AUTEC POWER SYSTEMS

Projection:		Unit: mm	Surface Treatment: PANTONE BLACK C
		Proportion:	Material: SECC T=1.2
Design:		Format: A3	Name: Base
Audit:	*	Version: A	
Standardization:	*	Product:	Part No: 373-10097-00
Approval:	T. Moody	1st Photo 1	

File Name:
483-0002-00

Date	Revision Number	Change Description	Sign

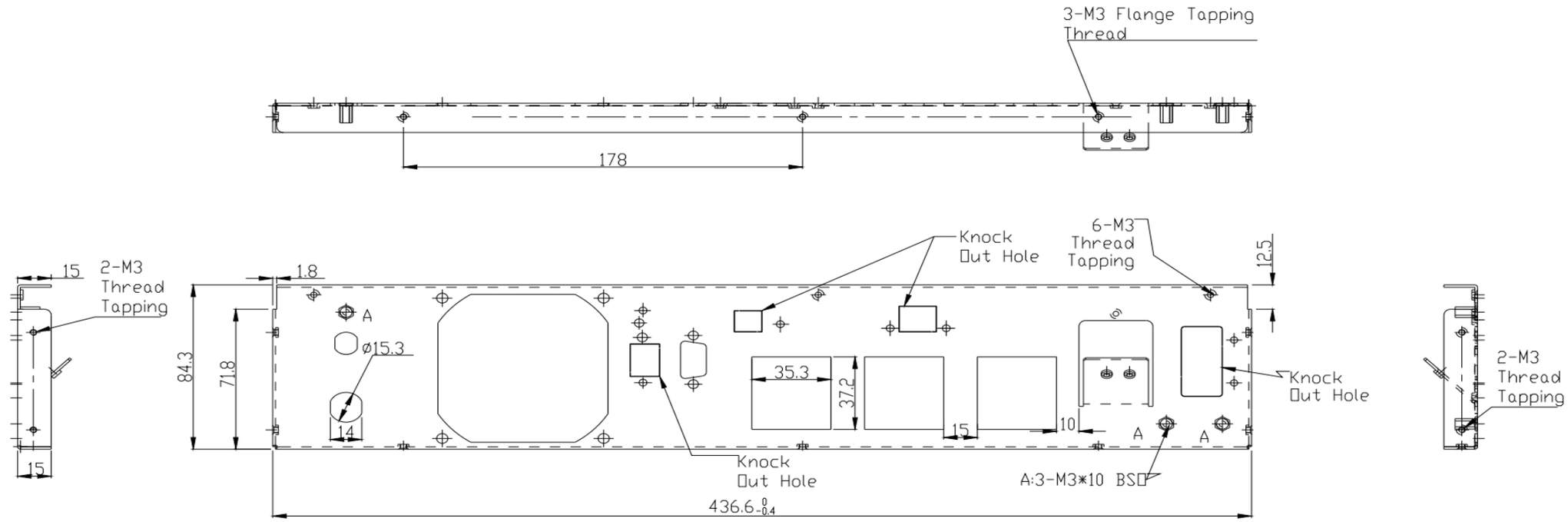

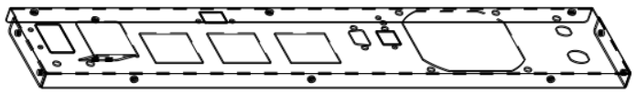

Scale 1:2

Requirements
1.The general linear dimension tolerance is according to GB1804-m level
2.The general geometric tolerance is according to GB1184-K
3.There must be no surface defects such as scratches
4.Remove sharp edges and sharp angles, remove oil stains
5.Radius of inner corner of unbent bend R0.5
6.The inner angle of the unbent bend 5.5X90°
7.Unfilled round radius R2
8.See CAD drawing for silk screen printing
9.Pay attention to the first angle projection

File Name:
373-Rear_Panel

AUTEC POWER SYSTEMS

Projection:		Unit: mm	Surface Treatment: PANTONE BLACK C
		Proportion:	Material: SGCC=T1.2
Design:		Format: A3	Name: Back Cover
Audit:	*	Version: A	
Standardization:	*	Product: Rack	Part No: 373-50103-01
Approval:	T. Moody	1st Photo 1	

Date	Revision Number	Change Description	Sign

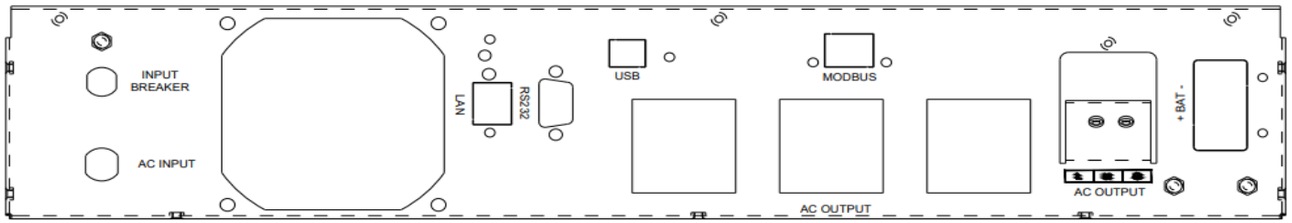

Requirements
1.Black Silk screen
2.CAD silkscreen document

File Name:
373-Rear_Panel

AUTEC POWER SYSTEMS

Projection:		Unit:	mm	Surface Treatment:	PANTONE BLACK C
		Proportion:		Material:	SGCC=T1.2
Design:		Format:	A3	Name:	Back Cover
Audit:	*	Version:	A		
Standardization:	*	Product:	Rack	Part No:	373-50103-01
Approval:	T. Moody	1st	Photo 1		