John Currie, *Chairman*
Vicky Gannon
Nancy Gerbino
Dennis McNamara
Jack Mattes
Bruce Prince
Christopher Zaberto

PLANNING BOARD

Town of Somers

WESTCHESTER COUNTY, N.Y.

TOWN HOUSE
335 ROUTE 202
SOMERS, NY 10589
TEL (914) 277-5366
FAX (914) 277-4093
EMAIL:
PLANNINGBOARD@SOMERSNY.COM

SOMERS PLANNING BOARD AGENDA

December 8, 2021 7:30PM

MINUTES

Draft Minutes for consideration of approval: November 10, 2021.

TIME EXTENSION REQUEST

1. COBBLING ROCK CONSERVATION SUBDIVISION APPLICATION FOR PROPERTY LOCATED AT COBBLING ROCK DRIVE & DR. TONY'S ROAD: TM 37.19-1-1

Request for a 90-day extension of Resolution 2021-08, Final Conditional Subdivision Approval, Steep Slope Protection, Stormwater Management and Erosion and Sediment Control, and Tree Removal Permits and construction of two (2) town roads, from the current expiration date of December 6, 2021 to March 6, 2022.

The property is on the south side of Cobbling Rock Drive and Dr. Tony's Road, in an R-120 Zoning District.

PUBLIC HEARING

2. STEINBERG WETLAND AND WATER COURSE PROTECTION PERMIT APPLICATION FOR PROPERTY LOCATED AT 3 TALL TREES COURT: TM 47.16-1-23

Public hearing continued from October.

Application for installation of a patio and inground pool within a wetland buffer.

The property is in the R-80 Zoning District.

PROJECT REVIEW

3. **CROWN CASTLE USA, INC. O/B/O T-MOBILE NE, LLC APPLICATION FOR MINOR MODIFICATION TO EXISTING WIRELESS TELECOMMUNICATIONS FACILITY SPECIAL USE PERMIT FOR PROPERTY LOCATED AT 294 ROUTE 100: TM 17.19-1-1**

   The property is located in the OB-100 zoning district.

4. **MASTRANTONI BROTHERS, INC. APPLICATION FOR PRELIMINARY APPROVAL OF SUBDIVISION FOR PROPERTY LOCATED AT 2 AMAWALK POINT ROAD. TM 36.12-2-6**

   Subdivision, Steep Slopes, Stormwater Management, and Erosion Control permits for the subdivision of a 5.6 acre parcel into two lots.

   The property is located in the R-80 zoning district.

5. **SOMERS NATIONAL GOLF COURSE APPLICATION FOR SITE PLAN MODIFICATIONS FOR PROPERTY LOCATION AT 1000 WEST HILL DRIVE: TM 6.17-20-1.21, 6.18-20-1.22 AND 6.13-20-1.23.**

   Site Plan Application, Steep Slopes, Tree Preservation, Stormwater Management, and Erosion Control Permits for the renovation of an existing cart storage building into a cigar bar, installation of four golf simulators, and the creation of an 18-hole mini golf course with parking.

   The property is located in a Designed Residential Development Overlay District (DRD).

INFORMAL PRESENTATION

6. PLUM BROOK REALTY, LLC APPLICATION FOR CONCEPTUAL SITE PLAN REVIEW FOR PROPERTY LOCATED AT PARAMOUNT AT SOMERS, 189 ROUTE 100: TM 28.17-1-19.2

Project introduction for Preliminary Site Plan for the development of Paramount at Somers Independent Living consisting of apartments and townhouses.

The property is in the R-80 zoning district.

The next Planning Board Meeting is scheduled for Wednesday, January 12, 2022 at 7:30pm.

Agenda Subject to Change

John Currie, *Chairman*
Vicky Gannon
Nancy Gerbino
Dennis McNamara
Bruce A. Prince
Christopher Zaberto
Jack Mattes

Town of Somers

WESTCHESTER COUNTY, N.Y.

TOWN HOUSE
335 ROUTE 202
SOMERS, NY 10589
TEL (914) 277-5366
FAX (914) 277-4093
EMAIL:
PLANNINGBOARD@SOMERSNY.COM

SOMERS PLANNING BOARD MINUTES
NOVEMBER 10, 2021
7:30PM

ROLL

PLANNING BOARD MEMBERS PRESENT: Chairman John Currie, Vicky Gannon, Nancy Gerbino, Dennis McNamara, Jack Mattes, Bruce Prince

ALSO PRESENT: David Smith, Consulting Town Planner, Planning & Development Advisors; Steve Robbins, Consulting Town Engineer, Woodard & Curran (by telephone), Planning Board Attorney Joe Eriole (by telephone)

ABSENT: Christopher Zaberto

MEETING COMMENCEMENT

The in-person meeting commenced at 7:30pm.

Chairman Currie requested participants say the Pledge of Allegiance.

Consulting Town Planner Dave Smith called the Roll and noted the required quorum of four members is present to conduct the business of the Board.

MINUTES

Chairman Currie moves to accept the minutes for the October 13, 2021 Planning Board Meeting as presented.

Member Jack Mattes seconds. All in favor. Motion passes.

PUBLIC HEARING

3 Tall Trees Court: TM 47.16-1-23
Steinberg Wetland and Water Course Protection Permit Application

Application for installation of a patio and inground pool within a wetland buffer. The property is located within the R-80 Zoning District.

Public Hearing continued from October.

Mr. William Besharat, Roy Fredrickson Engineering, provided hard copy submittals for the Planning Board.

The Applicant's revised materials were submitted on Monday, November 8 after the deadline for review. Woodard & Curran will review the materials for the December meeting.

No additional comments from Consulting Planner Dave Smith.

No one from the public was present in person or virtually to comment on the proposed project. The public hearing will remain open until the next meeting on December 8, 2021.

DISCUSSION

154 Route 202: TM 16.16-1-14
Lincolnland, LLC Application for Amended Site Plan Approval

Project introduction and escrow establishment for a Site Plan Modification for improvements made since prior approved plan, including new concrete pads and removal of vegetated buffer.

The 2-acre property is in the NS Zoning District.

Peter Helmes, The Helmes Group, was present for the Applicant.

Chairman Currie noted that no presentation will occur until the escrow is established.

Consulting Planner Dave Smith and Consulting Town Engineer Steve Robbins communicated to the Applicant that fees and $3,500 escrow must be established. An accounting of all time

spent reviewing the application package can be provided. Any remainder of the escrow after the review is refundable to the Applicant.

2 Amawalk Point Road: TM 36.12-2-6
Mastrantoni Brothers, Inc. Application for Preliminary Approval of Subdivision

Project introduction for a Preliminary Subdivision Approval of a 5.6 acre parcel located in the R-80 Zoning District.

Paul Lynch, Putnam Engineering, presented for the Applicant.

The application was submitted after the deadline, so Woodard & Curran will review the materials for the December 10 meeting.

Discussion regarding scheduling a site walk either before or after the engineering review. A site walk will be scheduled at the next meeting.

Mr. Lynch will have the surveyor stake the driveways, buildings, and septic system areas.

Consulting Planner Dave Smith did not have any comments.

2022 Planning Board Calendars

Chairman Currie moved to accept the calendars as presented. Member Vicky Gannon seconds. All in favor. Motion passes.

MEETING ADJOURNMENT

Chairman Currie reminded the members that the next Planning Board Meeting is Wednesday, December 8, 2021 at 7:30pm.

Chairman Currie moves to close the meeting. Member Vicky Gannon seconds. All in favor. Meeting adjourned at 7:46pm.

Respectfully submitted,

Janelle Robbins, Transcriber

Janelle Robbins
Woodard & Curran
800 Westchester Avenue, Suite N507
Rye Brook, New York 10573

BIBBO ASSOCIATES, L.L.P.
Consulting Engineers

Timothy S. Allen, P.E.
Nicholas Gaboury, P.E.
Matthew J. Gironda, P.E.

November 16, 2021

Somers Planning Board
335 Route 202
Somers, NY 10589

Attn: Mr. John Currie, Chairman

Re: Cobbling Rock Conservation Subdivision
Final Conditional Subdivision Approval
Request for Extension
Sec. 37.9, Blk. 1, Lot 1

Dear Chairman and Members of the Board:

On behalf of our client we are requesting that a 90-day extension be granted for Resolution 2021-08 that will be expiring on December 6, 2021 for the above referenced project.

We are in the process of obtaining signatures on the plat from the Westchester County Department of Health. We therefore request the above extension.

We respectfully request to be placed on your next available agenda for consideration.

Sincerely

Matthew J. Gironda, P.E.
Partner

MJG/mme

cc: V. Andriano
File

Site Design • Environmental

Mill Pond Offices · 293 Route 100 · Suite 203 · Somers, New York 10589
Phone: 914.277.5805 · Fax: 914.277.8210
Website: www.bibboassociates.com · E-mail: bibbo@bibboassociates.com

COMMITMENT & INTEGRITY DRIVE RESULTS

Woodard & Curran Engineering and Geological Services P.A.P.C.
800 Westchester Avenue | Suite N507
Rye Brook, New York 10573
www.woodardcurran.com

T 800.807.4080
T 914.448.2266
F 914.448.0147

MEMORANDUM

TO: Town of Somers Planning Board
CC: Wendy Getting, Town of Somers
David Smith, Consulting Town Planner
FROM: Jennifer L. Martinez Torres, P.E., on behalf of Steven C. Robbins, P.E., LEED AP
DATE: December 2, 2021
RE: 3 Tall Trees Court
Wetland and Watercourse Application and Stormwater Management and Erosion and Sediment Control Permit
TM: 47.16-1-23, R-80

GENERAL

The purpose of this memorandum is to provide the Planning Board with a summary of our comments related to our review of the applications for a Wetland Permit and a Stormwater Management and Erosion and Sediment Control Permit that were submitted for the Steinberg Residence located at 3 Tall Trees Court in Somers, New York.

The application proposes the construction of a 16' x 40' inground pool, the installation of a Unilock paver patio, and the installation of a pool fence. The project site is located within the East of Hudson watershed and the proposed work will occur within the 100-foot wetland buffer. Total project disturbance is estimated to be approximately 8,300 square feet which triggers the need for coverage under the NYSDEC SPDES General Permit.

This review focused on the engineering design and the associated Town Code requirements in accordance with the following:

- Town of Somers Code, Chapter 93: *Stormwater Management and Erosion and Sediment Control*, and other sections, as applicable.
- *New York State Standards and Specifications for Erosion and Sediment Control*, dated November 2016.
- *New York State Department of Environmental Conservation's (NYSDEC's) Stormwater Management Design Manual (SMDM)*, dated January 2015.

DOCUMENTS REVIEWED

- Survey, *"Survey of Property Being, Lot No. 13 B, Located in 'Muscoot Ridge',"* prepared by Donald J. Donnelly, L.S., dated May 17, 1990.
- Draft Notice of Intent
- Draft MS4 SWPPP Acceptance Form

- Drawing, *"Pool Site Plan"*, prepared by Roy Fredriksen, P.E., dated June 21, 2021, last revised November 5, 2021.
- Drawing, *"Rain Garden Design"*, prepared by Roy Fredriksen, P.E., dated September 23, 2021, last revised November 5, 2021.

PERMITS AND APPROVALS REQUIRED

- Town of Somers Planning Board: Wetland and Water Course Protection Permit (Chapter 167)
- Town of Somers Planning Board: Stormwater Management and Erosion and Sediment Control Permit (Chapter 93)

DISCUSSION

The following is a summary of our comments. New comments are based on our review of the latest submittal. Previously issued comments are noted in *italics* and the corresponding current status and response is shown below in **bold**. It should be noted that further comments may be provided upon review of additional information.

1. *The Applicant indicated that this project would result in approximately 108 cubic yards of earthwork. As such, the Applicant is subject to the requirements of Chapter 93 of the Somers Code due to the proposed earthwork and because the proposed work is located within the 100-ft wetland buffer. Therefore, the Applicant shall prepare a Stormwater Pollution Prevention Plan (SWPPP) that includes erosion and sediment controls consistent with the requirements of Section 93-6(A)(1) of the Town Code. Below are additional items that shall be provided on the Site Plan:* **Partially Addressed. Based on the revised plan set, the limits of disturbance are estimated to be approximately 8,300 square feet which would require coverage under the NYSDEC SPDES General Permit. The Applicant shall provide an Erosion and Sediment Control SWPPP consistent with the requirements of the General Permit.**

    a. *The Applicant shall show the intended location of the equipment staging area on the plan.* **Addressed.**

    b. *The Applicant shall provide a typical construction detail for orange construction fencing to be used on-site.* **Addressed.**

    c. *The Applicant shall confirm if any trees are proposed to be protected or removed during construction. If tree protection is required, the Applicant shall provide a tree protection detail on the plans.* **Prior to construction, the engineer shall review the required tree protection areas with the Principal Engineering Technician.**

    d. *The Applicant shall include a note on the plan which states, "All E&SC measures shall be installed and maintained per New York State Standards and Specifications for Erosion and Sediment Control, dated November 2016".* **Addressed.**

    e. *The Applicant shall revise the project documents to include the following SWPPP requirements per Section 93-6(A)(1) of the Town Code:*

i. *The Applicant shall provide the limits of disturbance on the plans. The limits shall include the proposed pool/patio area, the proposed drainage structures, and the proposed rain garden/bioretention area.* **Partially Addressed. A draft NOI and MS4 SWPPP Acceptance Form were provided, but the E&S SWPPP does not meet the prescriptive requirements of the SPDES General Permit (Part III, Sections A, B, and C) and shall be provided to Town prior to signing of the MS4 SWPPP Acceptance Form.**

ii. *The Applicant shall indicate how dust will be controlled at the site.* **Addressed.**

iii. *The Applicant shall provide a description of the pollution prevention measures that will be used to control litter, construction chemicals, and construction debris from becoming a pollutant source in stormwater runoff.* **Addressed.**

2. *The Applicant shall include a table on the drawings that quantifies the existing and proposed impervious surface coverage for the project.* **Addressed.**

3. *The Applicant is proposing to construct a new inground pool and patio within the 100-ft wetland buffer and therefore shall provide treatment for the proposed development. It appears that the rain garden is being proposed to provide treatment and is sized based on a ponding volume of 1.5 inches over the entire drainage area. Since the drainage area is estimated to be over 1,000 square feet, the NYSDEC SMDM requires that design elements of bioretention practices are incorporated. The Applicant shall provide the following information to demonstrate feasibility of the rain garden/bioretention area as adequate treatment/mitigation within the wetland buffer:*

   a. *The rain garden/bioretention area shall be sized per the NYSDEC SMDM for the required treatment volume. The Applicant shall provide signed and sealed deep hole test results to indicate that ample separation exists between the bottom of the proposed bioretention feature and bedrock or groundwater. This can be provided during construction.* **Partially Addressed. The Applicant notes that a rain garden is a type of bioretention practice, but the NYSDEC SMDM requires additional elements of bioretention practices for drainage areas larger than 1,000 square feet. The extent of modifications is likely minor and can be addressed as a condition of approval.**

   b. *The Applicant shall provide calculations to demonstrate that the rain garden/bioretention feature is adequately sized to treat all new impervious surfaces within the wetland buffer (i.e., equal to or greater than the water quality volume (WQv), runoff reduction volume (RRv)).* **Partially Addressed. The Applicant provided the required calculations. The Applicant shall adjust the calculations as necessary to incorporate design elements of bioretention practices.**

   c. *The Applicant shall revise the construction detail for the rain garden/bioretention feature to incorporate design elements from Chapter 6.4 of the NYSDEC SMDM.*

Partially Addressed. The Applicant shall revise the detail to incorporate design elements for a bioretention practice.

d. *The rain garden detail provided on the plan shows an upgradient diversion swale. The Applicant shall show the proposed swale on the site plan.* **Addressed. The Applicant revised the rain garden detail to remove the diversion swale.**

e. *The Applicant shall provide a planting plan for the proposed rain garden/ bioretention feature.* **Addressed.**

f. *The Applicant shall provide installation/inspection/maintenance requirements for the proposed rain garden/bioretention feature.* **Addressed.**

g. *The Applicant is proposing yard drains upstream of the rain garden/bioretention area. The Applicant shall revise the detail to provide least an 18-inch sump for sediment capture.* **Addressed.**

h. *The Applicant shall provide invert elevations for all proposed drainage infrastructure.* **Condition required prior to issuance of environmental permits. The Applicant shall also review the proposed grading, drainage infrastructure invert elevations, and cover over drainage pipes, and shall resubmit the site plan if grading and/or structure modifications are required.**

i. *The Applicant shall provide a pipe trench detail on the plans.* **Addressed.**

4. *Since the Applicant is proposing development within the 100-ft wetland buffer area, the Applicant shall also provide mitigation for the existing impervious surface within the delineated buffer area. The Applicant shall provide a stormwater management feature (i.e. rain garden, bioretention facility, etc.) to mitigate/improve potential negative environmental impacts to the wetland on the property. The stormwater management feature shall be designed in accordance with the NYSDEC Stormwater Management Design Manual (i.e., WQv, RRv, inspection/maintenance requirements, etc.).* **Addressed.**

5. *The Applicant shall reference the survey used to develop the base mapping on the plan. The Applicant shall also provide the survey of the site as an existing conditions plan.* **Addressed.**

6. *The Applicant shall include a note on the Site Plan for Dig Safely NY 811 which states the following: "Prior to Construction, Contractor shall locate all buried utilities to ensure that no interference exists during construction activities".* **Addressed.**

7. *The Applicant shall include a note on the Site Plan Drawing which states: "Any imported topsoil shall comply with all federal, state, and local requirements for quality and use".* **Addressed.**

8. *The Applicant shall include a note on the Site Plan Drawing which states: "Off-site disposal of excess cut shall be in accordance with all federal, state, and local requirements."* **Addressed.**

9. *The Applicant shall describe the winter drawdown procedures for the pool.* **Addressed. The Applicant indicated that no drawdown is required for the proposed one-piece fiberglass pool.**

10. *The Applicant shall identify if rock removal is anticipated during construction of the proposed site plan. In the event that rock removal is expected, the Applicant shall describe the intended methodology of rock removal and provide estimates of rock quantities and duration of removal activities.* **Addressed. The Applicant clarified that no rock removal is anticipated during construction. If rock is encountered during construction, the Applicant shall notify the Town's Principal Engineering Technician.**
11. Prior to issuance of the environmental permits, the Applicant shall relocate the rain garden to provide a separation of at least 50 ft from the existing well per NYCRR Part 5, Subpart 5-1 Standards for Water Wells – Appendix 5B.

Please feel free to contact our office with any questions or concerns.

Sincerely,

Jennifer L. Martinez Torres, P.E.
Assistant Consulting Town Engineer

On behalf of,

Steven C. Robbins, P.E., LEED AP
Consulting Town Engineer

valore, llc

building and managing assets

PRINCIPALS
Roger Johnson, PE
Frank DeGenova

Lori DeGenova
Sheri Weber, PE

November 3, 2021

Sent via fed-ex

NY - TOWN OF SOMERS
Planning Department
David Smith – Director of Planning
335 ROUTE 202
SOMERS, NY 10589

RE: Request for Minor Modification to Existing Wireless Facility – Section 6409
Site Address: 294 ROUTE 100, SOMERS, NY 10578
Crown Site Number: 806949 / Crown Site Name: NY SOMERS 958150
Customer Site Number: T-Mobile NY09014G / Application Number: 55730

Dear David Smith,

Regarding the above referenced site, please be advised that our office has been retained by Crown Castle, USA to assist with the Permit process. Kindly note this project simply entails the modification of existing telecommunication equipment that is currently located at the referenced site. There is no expansion of the facility proposed.

A Building Permit Application was submitted to the Township for the proposed T-Mobile modifications on 9.28.2021. Town has indicated that approval from Planning Board is required prior to Permit Application being reviewed.
Per information and clarification received from David Smith, Director of Planning-Town of Somers, on October 8th, 2021, we are submitting the following information for Planning Board Consideration and are hopeful as discussed that due to the minor nature of this project that the public hearing requirement may be recommended to be waived.
Attached kindly find the following in support of the project:

1. (1) Completed Application for Amended Special Use Permit-Wireless Telecommunications Facility ,
2. (1) Check $800 for Application Fee,
3. (1) Check $2500 for Escrow Fee,
4. (5) Original PE Seal Structural Tower Analysis (Passing) Reports,
5. (5) Eligible Facilities Request Letter with 6409 checklist (filed with original permit submission),
6. (5) Original PE Seal Construction Drawing Sets
7. (5) Orignal PE Seal Inspection Reports
8. (1) USB drive with documents submitted

If you have any questions, please feel free to reach out to me at 856.296.8988 or via email at ldegenova@valorellc.com.

Sincerely Yours,
Valore, LLC
Lori DeGenova
Site Acquisition

3304 Wesley Avenue
ocean city, nj 08226
856.912.0707

eleven wismer road
schwenksville, pa 19473
610.291.0979

1.2019

RECEIVED
NOV 22 2021
PLANNING-ENGINEERING
TOWN OF SOMERS

TOWN OF SOMERS
WESTCHESTER COUNTY, NEW YORK
APPLICATION FOR SPECIAL USE PERMIT
WIRELESS TELECOMMUNICATIONS FACILITY

Facility Owner/User Crown Castle USA Inc. **Tel. #:** 856-296-8988
Address: Wireless Facility Address: 294 Route 100, Somers NY 10578 (Crown Castle Facility Site# 806949)
Property Owner: 294 route 100 LLC **Tel. #:**
Address: 417 Fifth Avenue, New York, NY 10016
Applicant: Crown Castle USA Inc o/b/o T-Mobile NE LLC **Tel. #:** 856-296-8988
Address: 3200 Horizon Dr., Suite 150, King of Prussia, PA 19406
Managing Agent: Lori DeGenova-agent o/b/o Crown o/b/o T-mobile **Tel. #:** 856-296-8988
Address: 3200 Horizon Dr., Suite 150, King of Prussia, PA 19406
Westchester County Agent: **Tel. #**
Address:

Parcel ID Number: 5200-017-019-00001-000-0001
Premises: Sheet: **Block:** **Lot:** **Situated on the** **side of** **(Street)** **feet from the intersection of** **(Street)**

Zoning District OB-100
PROJECT TITLE: T-Mobile Antenna and Equipment Modifications @ Crown Tower Facility 806949
DESCRIPTION OF WORK AND PURPOSE:
T-Mobile proposing to remove 3 antennas and 3 TMAs and install 3 new antennas and 3 new RRUs along with 1 hybrid cable at existing 92'agl elevation on the existing tower. T-Mobile proposing to remove one equipment cabinet from existing equipment pad and install two new equipment cabinets on existing equipment pad. No expansion to wireless facility compound or tower is being proposed.

TYPE OF PERMIT REQUESTED:
- ____ **ORIGINAL/NEW**
- X **AMENDED (Date of Original Permit)**
- ____ **RENEWAL (Date of Original Permit)**

SIZE OF ACTIVITY AREA: 8'x10' T-mobile existing equipment pad
ESTIMATED TOTAL VALUE OF WORK: $20,000
PROPOSED STARTING DATE: Upon receipt of permits
PROPOSED COMPLETION DATE: 1on or before 12.15.2021
PLANS PREPARED BY: French & Parrello Associates **DATED:** 5/10/2021
Plans must be submitted with application.

APPLICATION FEE:

$1,000.00	**Original/New Special Use Permit Application**
$ 800.00	**Amended Special Use Permit Application**
$ 500.00	**Renewal of Special Use Permit Application (every 5 years)**

Based upon Somers Town Code §133-2. At the time of submission of any application, an Escrow Account shall be established to pay for the costs of professional review services.

DOCUMENTS TO BE SUBMITTED WITH THIS APPLICATION:
5-~~14~~-**Copies of all correspondence and plans submitted to the Planning Board.**
Please refer to Somers Town Code §170-129.8, Application procedure. for the required documents to be submitted. (see attached)

APPLICANT/FACILITY/OWNER/USER SIGNATURE:
DATE: 11/3/2021
PROPERTY OWNER'S SIGNATURE: Please see attached owner signature obtained for permit app and affadavit
DATE: 9-8-2021

TOWN OF SOMERS
WESTCHESTER COUNTY, NEW YORK
CHAPTER 67 "APPLICATION PROCESSING RESTRICTIVE LAW"

AFFIDAVIT

I hereby certify that to the best of my knowledge no outstanding fees are due and owing To the Town of Somers for the following property:

Section 17 Block 19-1 Lot 1

Property Address 294 Route 100

Permit Applying For Building Permit

Furthermore, I hereby certify that to the best of my knowledge no outstanding violation (as that term is defined for the purposes of the Application Processing Restrictive Law, Paragraph 4D) of local laws or ordinances of the Town of Somers exist with respect to the above cited property or any structure or use existing thereon.

Signed _____ (Owner of Record)

294 Route 100 LLC (Print Name)

Date 9-8-2021

Signed _____ (Applicant for Permit)

_____ (Print Name)

Date _____

CONFIRMATIONS

_____ Zoning Enforcement Officer

Date _____

_____ Director of Finances for Fees

Date _____

Town of Somers Building Permit Application

Owner: 294 Route 100 LLC		Mailing Address: 294 Route 100		
Street Address: 417 Fifth Ave. NY, NY 10016				
Phone #:		Builder: EJD Wireless		
E-Mail:		Builder Contact:		
Occupancy Classification		Estimated Cost of Construction: $55,000.00		
Building Inspector:	Zone: OB-100	Section: 17.19-1-1	Block:	Lot:

DESCRIPTION: T-Mobile proposes to modify the existing Wireless Facility:
REMOVE (3) ANTENNAS & INSTALL (3) ANTENNAS - RELOCATE (3) TMAs · INSTALL (3) RRUs · INSTALL (1) HCS 6x24 1-5/8" HYBRID CABLE
UPGRADE BTS CABINET BREAKER · REMOVE (1) 6201 ODE CABINET · INSTALL (1) ENCLOSURE 6160 CABINET
INSTALL (1) B160 BATTERY CABINET

Permit #	Date	Fee	Check #	
				(Renewal)
				(Renewal)
				(Renewal)

BOH Sealed Plans	
BOH Approval	
Survey	
Environmental Determination	
Driveway Permit - Highway Department	
Proof of Ownership	

Insurance/One Man	
Water district - hook up letter	
Proof of Septic cleaning	
Variance Approval	
HOA Approval	
Premises Identification #	

I hereby certify that I have read and acknowledge the information on this permit application.

Owner
(original signature required)

Sign: _____

Print: Authorized Signatory

Date: 9-8-21

Applicant
(original signature required)

Sign: _____

Print: _____

Date: _____

Comments

Reviewed for permit issuance per: _____

CROWN CASTLE

6325 Ardrey Kell Rd, Suite 600
Charlotte, NC 28277

Phone: (856) 296-8988
www.crowncastle.com

September 24, 2021

NY - TOWN OF SOMERS
Building Department
Thomas J. Tooma, Jr, Building Inspector
335 ROUTE 202
SOMERS, NY 10589

Via Mail

************NOTICE OF ELIGIBLE FACILITIES REQUEST************

RE: Request for Minor Modification to Existing Wireless Facility – Section 6409
Site Address: 294 ROUTE 100, SOMERS, NY 10578
Crown Site Number: 806949 / Crown Site Name: NY SOMERS 958150
Customer Site Number: NY09014G / Application Number: 557308

Dear Mr. Thomas J. Tooma, Jr:

On behalf of T-Mobile Northeast LLC ("T-Mobile" or "Applicant"), Crown Castle USA Inc. ("Crown Castle") is pleased to submit this request to modify the existing wireless facility noted above through the collocation, replacement and/or removal of the Applicant's equipment as an eligible facilities request for a minor modification under Section 6409[1] and the rules of the Federal Communications Commission ("FCC").[2]

Section 6409 mandates that state and local governments must approve any eligible facilities request for the modification of an existing wireless tower or base station that does not substantially change the physical dimensions of such tower or base station. Under Section 6409, to toll the review period, if the reviewing authority determines that the application is incomplete, it must provide written notice to the applicant within 30 days, which clearly and specifically delineates all missing documents or information reasonably related to whether the request meets the federal requirements.[3] Additionally, if a state or local government, fails to issue any approvals required for this request within 60 days, these approvals are deemed granted. The FCC has clarified that the 30-day and 60-day deadlines begins when an applicant: (1) takes the first step required under state or local law; and (2) submits information sufficient to inform the jurisdiction that this modification qualifies under the federal law[4]. Please note that with the submission of this letter and enclosed items, the thirty and sixty-day review periods have started. Based on this filing, the deadline for written notice of incomplete application is October 24, 2021, and the deadline for issuance of approval is November 23, 2021.

The proposed scope of work for this project includes:

---

[1] Middle Class Tax Relief and Job Creation Act of 2012, Pub. L. No. 112-96, § 6409 (2012) (codified at 47 U.S.C. § 1455).
[2] *Acceleration of Broadband Deployment by Improving Wireless Facility Siting Policies*, 29 FCC Rcd. 12865 (2014) (codified at 47 CFR § 1.6100); and *Implementation of State & Local Governments' Obligation to Approve Certain Wireless Facility Modification Requests Under Section 6409(a) of the Spectrum Act of 2012*, WT Docket No. 19-250 (June 10, 2020).
[3] *See* 47 CFR § 1.6100 (c)(3). [4] *See* 2020 Upgrade Order at paragraph 16.

CROWN CASTLE

6325 Ardrey Kell Rd, Suite 600
Charlotte, NC 28277

Phone: (856) 296-8988
www.crowncastle.com

Add or replace antennas, ancillary equipment and ground equipment as per plans for an existing carrier on an existing wireless communication facility. No tower height extension or compound expansion proposed.

At the end of this letter is a checklist of the applicable substantial change criteria under Section 6409. Additionally, please find enclosed the following information in support of this request:

(1) Town of Somers Building Permit Application signed by Owner;
(2) Town of Somers Affidavit signed by Owner;
(3) Check in the amount of $409 per pre-application meeting on or about July 19th, 2021;
(4) 3 copies of Construction Drawings;
(5) 3 copies of Passing Tower Structural Analysis;
(6) Contractor COI; and
(7) Section 6409 Substantial Change Checklist.

As these documents indicate, (i) the modification involves the collocation, removal or replacement of transmission equipment; and (ii) such modification will not substantially change the physical dimensions of such tower or base station. As such, it is an "eligible facilities request" as defined in the FCC's rules to which the 60-day deadline for approval applies. Accordingly, Applicant requests all authorization necessary for this proposed minor modification under Section 6409.

Our goal is to work with you to obtain approvals earlier than the deadline. We will respond promptly to any request for related information you may have in connection with this request. Please let us know how we can work with you to expedite the approval process. We look forward to working with you on this important project, which will improve wireless telecommunication services in your community using collocation on existing infrastructure. If you have any questions, please do not hesitate to contact me.

Regards,

Lori DeGenova

Lori DeGenova
Site Acquisition Specialist
Crown Castle
Agent for Applicant
(856) 296-8988

CROWN CASTLE

6325 Ardrey Kell Rd, Suite 600
Charlotte, NC 28277

Phone: (856) 296-8988
www.crowncastle.com

Section 6409 Substantial Change Checklist
Towers Outside of the Public Right of Way

The Federal Communications Commission has determined that a modification substantially changes the physical dimension of a wireless tower or base station under 47 U.S.C. § 1455(a) if it meets one of six enumerated criteria under 47 C.F.R. § 1.6100.

Criteria for Towers Outside the Public Rights of Way

YES/NO **NO**	Does the modification increase the height of the tower by more than the greater of: (a) 10% (b) or, the height of an additional antenna array plus separation of up to 20 feet from the top of the nearest existing antenna?
YES/NO **NO**	Does the modification add an appurtenance to the body of the tower that would protrude from the edge of the tower more than 20 feet or more than the width of the tower structure at the level of the appurtenance, whichever is greater?
YES/NO **NO**	Does the modification involve the installation of more than the standard number of new equipment cabinets for the technology involved or add more than four new equipment cabinets?
YES/NO **NO**	Does the modification entail any excavation or deployment outside the current site by more than 30 feet in any direction, not including any access or utility easements?
YES/NO **NO**	Does the modification defeat the concealment elements of the eligible support structure?
YES/NO **NO**	Does the modification violate conditions associated with the siting approval with the prior approval the tower or base station other than as specified in 47 C.F.R. § 1.6100(c)(7)(i) – (iv)?

If all questions in the above section are answered "NO," then the modification does not constitute a substantial change to the existing tower under 47 C.F.R. § 1.6100.

FRENCH & PARRELLO ASSOCIATES

Corporate Office
1800 Route 34, Suite 101
Wall, NJ 07719
Regional Offices
Camden, NJ
Hackettstown, NJ
New York, NY

November 2, 2021

Town of Somers
355 Route 202
Somers, NY 10589

Re: Permit Renewal – 2021 Tower Certification
T-Mobile Site name: Goldens Bridge_1
294 Route 100
Somers, NY 10578
FPA No. 2438.6818

To Whom It May Concern:

On October 29, 2021, French & Parrello Associates (FPA) performed a limited visual inspection, from grade-level, of the tower and foundation located at T-Mobile wireless telecommunications site referenced above.

The following existing conditions were visually inspected at the time of the site visit:

- Tower structure from the ground
- Exposed tower foundation above grade level
- Overall site conditions

The T-Mobile existing telecommunications installation consists of the following:

- A 10'x8' concrete equipment pad with two (2) cabinets
- A H-Frame mounted on the 10'x8' concrete pad
- Six (6) panel antennas, and six (6) tower mounted amplifiers mounted to three (3) T-arms on the monopole, with a centerline of the antennas at an elevation of 92'-0" +/- AGL. There are eighteen (18) coax cables routed up the inside of the monopole from grade level
- Related underground utility conduits and utility connections within the facility

Verizon wireless, Sprint PCS, and Crown Castle antennas are also mounted on the existing tower, as well their respective ground mounted equipment shelters or equipment platform.

The visual inspection confirmed that the existing antenna configuration, mounting attachments, cabling and other related appurtenances substantially match the antenna configuration indicated in the construction drawings prepared by FPA on 05/10/21. The inspection also confirmed that

the antenna mounting pipes and connections appear to be in good condition. No rust was visible along the pole shaft. No apparent structural issues were observed with the exposed portions of the pole base plate, anchor bolts and foundation. Furthermore, the tower compound was clean and appeared to be well maintained. Based on the above, the overall condition of the tower structure and T-Mobile telecommunications equipment appears to be satisfactory.

This inspection, as mentioned above, was performed from grade-level, and was limited for the structural element and appurtenances that were clearly visible and unobstructed to view on the day of the inspection.

Should you have any questions or comments, please do not hesitate to contact us.

Very truly yours,

FRENCH & PARRELLO ASSOCIATES

STATE OF NEW YORK
PETER J. TARDY
079612
LICENSED PROFESSIONAL ENGINEER

Peter J. Tardy, PE
Senior Vice President
NY Professional Engineering License No. 079612

Date: **June 17, 2021**

CROWN CASTLE
Crown Castle
2000 Corporate Drive
Canonsburg, PA 15317
(724) 416-2000

Subject:	**Structural Analysis Report**	
Carrier Designation:	***T-Mobile* Co-Locate**	
	Site Number:	NY09014G
Crown Castle Designation:	**BU Number:**	806949
	Site Name:	NY SOMERS 958150
	JDE Job Number:	650169
	Work Order Number:	1956131
	Order Number:	557308 Rev. 0
Engineering Firm Designation:	**Crown Castle Project Number:**	1956131
Site Data:	**ROUTE 100, SOMERS, WESTCHESTER County, NY**	
	Latitude *41° 18' 37.8"*, Longitude *-73° 41' 6.5"*	
	100.5 Foot - Monopole Tower	

Crown Castle is pleased to submit this **"Structural Analysis Report"** to determine the structural integrity of the above-mentioned tower.

The purpose of the analysis is to determine acceptability of the tower stress level. Based on our analysis we have determined the tower stress level for the structure and foundation, under the following load case, to be:

LC7: Proposed Equipment Configuration **Sufficient Capacity**

This analysis has been performed in accordance with the 2020 New York State Uniform Code based upon an ultimate 3-second gust wind speed of 114 mph. Applicable Standard references and design criteria are listed in Section 2 - "Analysis Criteria".

Structural analysis prepared by: Emma McCarty

Respectfully submitted by:

Jamal A. Huwel, P.E.
Director Engineering

STATE OF NEW YORK
JAMAL A. HUWEL
090707
LICENSED PROFESSIONAL ENGINEER

10/14/2021

TABLE OF CONTENTS

1) INTRODUCTION

This tower is a 100.5 ft Monopole tower designed by Engineered Endeavors, Inc..

2) ANALYSIS CRITERIA

TIA-222 Revision:	TIA-222-H
Risk Category:	II
Wind Speed:	114 mph
Exposure Category:	C
Topographic Factor:	1
Ice Thickness:	1.5 in
Wind Speed with Ice:	50 mph
Service Wind Speed:	60 mph

Table 1 - Proposed Equipment Configuration

Mounting Level (ft)	Center Line Elevation (ft)	Number of Antennas	Antenna Manufacturer	Antenna Model	Number of Feed Lines	Feed Line Size (in)
92.0	93.0	3	commscope	ETM19V2S12UB	1 18	1-5/8 7/8
		3	commscope	TMAT7LA-11A		
		3	ericsson	RADIO 4449 B71 B85A_T-MOBILE		
		3	rfs celwave	APX16DWV-16DWVS-C w/ Mount Pipe		
		3	rfs celwave	APXVAALL24_43-U-NA20_TMO w/ Mount Pipe		
	92.0	1	tower mounts	T-Arm Mount [TA 602-3]		

Table 2 - Other Considered Equipment

Mounting Level (ft)	Center Line Elevation (ft)	Number of Antennas	Antenna Manufacturer	Antenna Model	Number of Feed Lines	Feed Line Size (in)
103.0	105.0	3	commscope	DBXNH-8585B-A2M w/ Mount Pipe	12 3	7/8 1-1/4
		6	commscope	NHH-65B-R2B w/ Mount Pipe		
		3	nokia	AHBCC		
		3	nokia	AHFIC		
	104.0	1	raycap	RC3DC-3315-PF-48		
		2	raycap	RXXDC-3315-PF-48		
	103.0	1	tower mounts	Miscellaneous [NA 508-3]		
		1	tower mounts	Side Arm Mount [SO 702-3]		
83.0	87.0	2	gps	GPS_A	2 12	1/2 7/8
	85.0	12	decibel	DB844H90E-XY w/ Mount Pipe		
	83.0	1	tower mounts	Miscellaneous [NA 508-3]		
		1	tower mounts	Side Arm Mount [SO 101-3]		
		1	tower mounts	Side Arm Mount [SO 701-3]		
71.0	73.0	1	gps	GPS_A	1 1 3	1/2 5/8 1-1/4
	71.0	3	alcatel lucent	1900MHZ RRH (65MHZ)		
		3	alcatel lucent	800 EXTERNAL NOTCH FILTER		

Mounting Level (ft)	Center Line Elevation (ft)	Number of Antennas	Antenna Manufacturer	Antenna Model	Number of Feed Lines	Feed Line Size (in)
		3	alcatel lucent	800MHZ RRH		
		9	rfs celwave	ACU-A20-N		
		3	rfs celwave	APXVSPP18-C-A20		
		1	tower mounts	Miscellaneous [NA 508-3]		
61.0	61.0	3	fujitsu	TA08025-B604	1	1-3/8
		3	fujitsu	TA08025-B605		
		3	jma wireless	MX08FRO665-21 w/ Mount Pipe		
		1	raycap	RDIDC-9181-PF-48		
		1	tower mounts	Commscope MC-PK8-DSH		

3) ANALYSIS PROCEDURE

Table 3 - Documents Provided

Document	Reference	Source
4-GEOTECHNICAL REPORTS	5306914	CCISITES
4-TOWER FOUNDATION DRAWINGS/DESIGN/SPECS	261281	CCISITES
4-TOWER MANUFACTURER DRAWINGS	218779	CCISITES

3.1) Analysis Method

tnxTower (version 8.1.1.0), a commercially available analysis software package, was used to create a three-dimensional model of the tower and calculate member stresses for various loading cases. Selected output from the analysis is included in Appendix A. When applicable, Crown Castle has calculated and provided the effective area for panel antennas using approved methods following the intent of the TIA-222 standard.

3.2) Assumptions

1) Tower and structures were maintained in accordance with the TIA-222 Standard.
2) The configuration of antennas, transmission cables, mounts and other appurtenances are as specified in Tables 1 and 2 and the referenced drawings.

This analysis may be affected if any assumptions are not valid or have been made in error. Crown Castle should be notified to determine the effect on the structural integrity of the tower.

4) ANALYSIS RESULTS

Table 4 - Section Capacity (Summary)

Section No.	Elevation (ft)	Component Type	Size	Critical Element	P (K)	SF*P_allow (K)	% Capacity	Pass / Fail
L1	100.5 - 80	Pole	TP22.25x17x0.1875	1	-5.46	787.33	29.6	Pass
L2	80 - 44.42	Pole	TP30.77x21.0427x0.25	2	-15.86	1455.49	57.8	Pass
L3	44.42 - 1.75	Pole	TP41x29.1853x0.3125	3	-25.23	2514.85	64.4	Pass
L4	1.75 - 0	Pole	TP41x41x0.3125	4	-25.62	2514.85	66.0	Pass
							Summary	
						Pole (L4)	66.0	Pass
						Rating =	66.0	Pass

Table 5 - Tower Component Stresses vs. Capacity - LC7

Notes	Component	Elevation (ft)	% Capacity	Pass / Fail
1	Flange Bolts	1.5	34.5	Pass
1	Flange Plate	1.5	60.1	Pass
1	Anchor Rods	0	44.2	Pass
1	Base Plate	0	56.9	Pass
1	Base Foundation (Structure)	0	62.1	Pass
1	Base Foundation (Soil Interaction)	0	59.5	Pass

Structure Rating (max from all components) =	**66.0%**

Notes:
1) See additional documentation in "Appendix C – Additional Calculations" for calculations supporting the % capacity consumed.

4.1) Recommendations

The tower and its foundation have sufficient capacity to carry the proposed load configuration. No modifications are required at this time.

APPENDIX A

TNXTOWER OUTPUT

Section	1	2	3	4
Length (ft)	20.50	38.83	47.00	1.75
Number of Sides	12	12	12	12
Thickness (in)	0.1875	0.2500	0.3125	0.3125
Socket Length (ft)	3.25	4.33		
Top Dia (in)	17.0000	21.0427	29.1853	41.0000
Bot Dia (in)	22.2500	30.7700	41.0000	41.0000
Grade	A572-65			
Weight (K)	0.8	2.7	5.6	9.4 0.2

100.5 ft

80.0 ft

44.4 ft

1.8 ft

0.0 ft

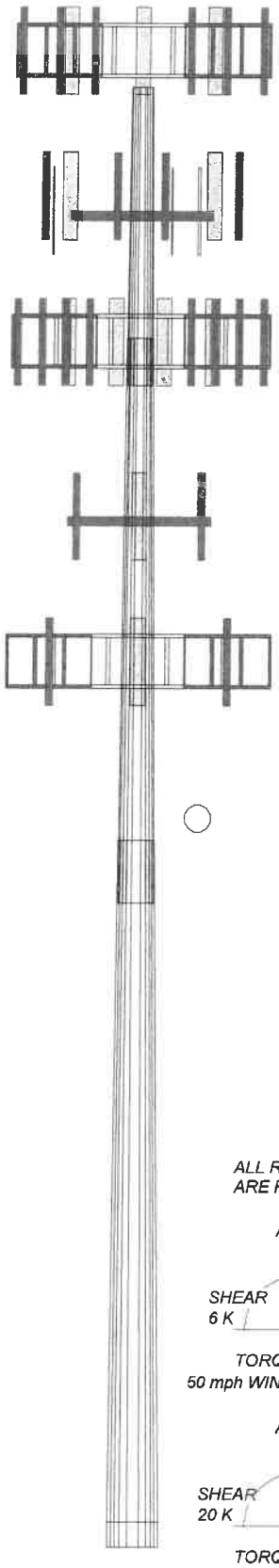

MATERIAL STRENGTH

GRADE	Fy	Fu	GRADE	Fy	Fu
A572-65	65 ksi	80 ksi			

TOWER DESIGN NOTES

1. Tower is located in Westchester County, New York.
2. Tower designed for Exposure C to the TIA-222-H Standard.
3. Tower designed for a 114 mph basic wind in accordance with the TIA-222-H Standard.
4. Tower is also designed for a 50 mph basic wind with 1.50 in ice. Ice is considered to increase in thickness with height.
5. Deflections are based upon a 60 mph wind.
6. Tower Risk Category II.
7. Topographic Category 1 with Crest Height of 0.00 ft
8. TOWER RATING: 66%

ALL REACTIONS ARE FACTORED

AXIAL 45 K

SHEAR 6 K

MOMENT 442 kip-ft

TORQUE 0 kip-ft

50 mph WIND - 1.5000 in ICE

AXIAL 26 K

SHEAR 20 K

MOMENT 1412 kip-ft

TORQUE 0 kip-ft

REACTIONS - 114 mph WIND

CROWN CASTLE
The Pathway to Possible

Crown Castle
2000 Corporate Drive
Canonsburg, PA 15317
Phone: (724) 416-2000
FAX:

Job: *BU# 806949*			
Project:			
Client: Crown Castle	Drawn by: EMcCarty	App'd:	
Code: TIA-222-H	Date: 06/17/21	Scale: NTS	
Path: C:\WORK AREA\806949\WO 1956131 - SA\Prod\806949_RPA.eri		Dwg No. E-1	

Tower Input Data

The tower is a monopole.
This tower is designed using the TIA-222-H standard.
The following design criteria apply:

- Tower is located in Westchester County, New York.
- Tower base elevation above sea level: 436.00 ft.
- Basic wind speed of 114 mph.
- Risk Category II.
- Exposure Category C.
- Simplified Topographic Factor Procedure for wind speed-up calculations is used.
- Topographic Category: 1.
- Crest Height: 0.00 ft.
- Nominal ice thickness of 1.5000 in.
- Ice thickness is considered to increase with height.
- Ice density of 56 pcf.
- A wind speed of 50 mph is used in combination with ice.
- Temperature drop of 50 °F.
- Deflections calculated using a wind speed of 60 mph.
- A non-linear (P-delta) analysis was used.
- Pressures are calculated at each section.
- Stress ratio used in pole design is 1.05.
- Tower analysis based on target reliabilities in accordance with Annex S.
- Load Modification Factors used: $K_{es}(F_w) = 0.95$, $K_{es}(t_i) = 0.85$.
- Maximum demand-capacity ratio is: 1.
- Local bending stresses due to climbing loads, feed line supports, and appurtenance mounts are not considered.

Options

Consider Moments - Legs
Consider Moments - Horizontals
Consider Moments - Diagonals
Use Moment Magnification
Use Code Stress Ratios
√ Use Code Safety Factors - Guys
Escalate Ice
Always Use Max Kz
Use Special Wind Profile

Include Bolts In Member Capacity

Leg Bolts Are At Top Of Section
Secondary Horizontal Braces Leg
Use Diamond Inner Bracing (4 Sided)
SR Members Have Cut Ends
SR Members Are Concentric

Distribute Leg Loads As Uniform
Assume Legs Pinned
√ Assume Rigid Index Plate
√ Use Clear Spans For Wind Area
Use Clear Spans For KL/r
Retension Guys To Initial Tension
√ Bypass Mast Stability Checks
√ Use Azimuth Dish Coefficients
√ Project Wind Area of Appurt.

Autocalc Torque Arm Areas

Add IBC .6D+W Combination
√ Sort Capacity Reports By Component
Triangulate Diamond Inner Bracing
Treat Feed Line Bundles As Cylinder
Ignore KL/ry For 60 Deg. Angle Legs

Use ASCE 10 X-Brace Ly Rules
Calculate Redundant Bracing Forces
Ignore Redundant Members in FEA
SR Leg Bolts Resist Compression
All Leg Panels Have Same Allowable
Offset Girt At Foundation
√ Consider Feed Line Torque
Include Angle Block Shear Check
Use TIA-222-H Bracing Resist. Exemption
Use TIA-222-H Tension Splice Exemption

Poles

√ Include Shear-Torsion Interaction
Always Use Sub-Critical Flow
Use Top Mounted Sockets
Pole Without Linear Attachments
Pole With Shroud Or No Appurtenances
Outside and Inside Corner Radii Are Known

Tapered Pole Section Geometry

Section	Elevation ft	Section Length ft	Splice Length ft	Number of Sides	Top Diameter in	Bottom Diameter in	Wall Thickness in	Bend Radius in	Pole Grade
L1	100.50-80.00	20.50	3.25	12	17.0000	22.2500	0.1875	0.7500	A572-65 (65 ksi)
L2	80.00-44.42	38.83	4.33	12	21.0427	30.7700	0.2500	1.0000	A572-65 (65 ksi)
L3	44.42-1.75	47.00	0.00	12	29.1853	41.0000	0.3125	1.2500	A572-65 (65 ksi)
L4	1.75-0.00	1.75		12	41.0000	41.0000	0.3125	1.2500	A572-65 (65 ksi)

Tapered Pole Properties

Section	Tip Dia. in	Area in^2	I in^4	r in	C in	I/C in^3	J in^4	It/Q in^2	w in	w/t
L1	17.5336	10.1505	366.2183	6.0189	8.8060	41.5874	742.0575	4.9958	4.0535	21.619
	22.9688	13.3202	827.5748	7.8984	11.5255	71.8038	1676.8909	6.5558	5.4605	29.123
L2	22.5397	16.7381	923.6627	7.4438	10.9001	84.7388	1871.5911	8.2380	4.9694	19.878
	31.7673	24.5686	2921.0260	10.9262	15.9389	183.2644	5918.7905	12.0919	7.5764	30.305
L3	31.2315	29.0532	3091.4206	10.3365	15.1180	204.4864	6264.0563	14.2991	6.9842	22.349
	42.3361	40.9418	8651.1703	14.5661	21.2380	407.3439	17529.6165	20.1503	10.1505	32.482
L4	42.3361	40.9418	8651.1703	14.5661	21.2380	407.3439	17529.6165	20.1503	10.1505	32.482
	42.3361	40.9418	8651.1703	14.5661	21.2380	407.3439	17529.6165	20.1503	10.1505	32.482

Tower Elevation ft	Gusset Area (per face) ft^2	Gusset Thickness in	Gusset Grade	Adjust. Factor A_f	Adjust. Factor A_r	Weight Mult.	Double Angle Stitch Bolt Spacing Diagonals in	Double Angle Stitch Bolt Spacing Horizontals in	Double Angle Stitch Bolt Spacing Redundants in
L1 100.50-80.00				1	1	1			
L2 80.00-44.42				1	1	1			
L3 44.42-1.75				1	1	1			
L4 1.75-0.00				1	1	1			

Feed Line/Linear Appurtenances - Entered As Round Or Flat

Description	Sector	Exclude From Torque Calculation	Component Type	Placement ft	Total Number	Number Per Row	Start/End Position	Width or Diameter in	Perimeter in	Weight plf
*** *** HB158-21U6S24-xxM_TMO(1-5/8) ***	B	No	Surface Ar (CaAa)	92.00 - 0.00	1	1	0.230 0.270	1.9960		2.50

Feed Line/Linear Appurtenances - Entered As Area

Description	Face or Leg	Allow Shield	Exclude From Torque Calculation	Component Type	Placement ft	Total Number		C_AA_A ft^2/ft	Weight plf
****** AL5-50(7/8)	C	No	No	Inside Pole	100.50 - 0.00	12	No Ice	0.00	0.26

Description	Face or Leg	Allow Shield	Exclude From Torque Calculation	Component Type	Placement ft	Total Number		C_AA_A ft^2/ft	Weight plf
							1/2" Ice	0.00	0.26
							1" Ice	0.00	0.26
							2" Ice	0.00	0.26
HB114-1-0813U4-M5J(1-1/4)	C	No	No	Inside Pole	100.50 - 0.00	3	No Ice	0.00	1.20
							1/2" Ice	0.00	1.20
							1" Ice	0.00	1.20
							2" Ice	0.00	1.20
HJ5-50A(7/8)	B	No	No	Inside Pole	92.00 - 0.00	18	No Ice	0.00	0.54
							1/2" Ice	0.00	0.54
							1" Ice	0.00	0.54
							2" Ice	0.00	0.54
***									
LDF4-50A(1/2)	B	No	No	Inside Pole	83.00 - 0.00	2	No Ice	0.00	0.15
							1/2" Ice	0.00	0.15
							1" Ice	0.00	0.15
							2" Ice	0.00	0.15
LDF5-50A(7/8)	B	No	No	Inside Pole	83.00 - 0.00	12	No Ice	0.00	0.33
							1/2" Ice	0.00	0.33
							1" Ice	0.00	0.33
							2" Ice	0.00	0.33
***									
LDF4-50A(1/2)	C	No	No	Inside Pole	71.00 - 0.00	1	No Ice	0.00	0.15
							1/2" Ice	0.00	0.15
							1" Ice	0.00	0.15
							2" Ice	0.00	0.15
HB058-M12-XXXF(5/8)	C	No	No	Inside Pole	71.00 - 0.00	1	No Ice	0.00	0.24
							1/2" Ice	0.00	0.24
							1" Ice	0.00	0.24
							2" Ice	0.00	0.24
HB114-1-08U4-M5F(1-1/4)	C	No	No	Inside Pole	71.00 - 0.00	3	No Ice	0.00	1.30
							1/2" Ice	0.00	1.30
							1" Ice	0.00	1.30
							2" Ice	0.00	1.30
***									
CU12PSM9P8XXX (1-3/8)	C	No	No	Inside Pole	61.00 - 0.00	1	No Ice	0.00	1.66
							1/2" Ice	0.00	1.66
							1" Ice	0.00	1.66
							2" Ice	0.00	1.66
***									

Feed Line/Linear Appurtenances Section Areas

Tower Section	Tower Elevation ft	Face	A_R ft^2	A_F ft^2	C_AA_A In Face ft^2	C_AA_A Out Face ft^2	Weight K
L1	100.50-80.00	A	0.000	0.000	0.000	0.000	0.00
		B	0.000	0.000	2.395	0.000	0.16
		C	0.000	0.000	0.000	0.000	0.14
L2	80.00-44.42	A	0.000	0.000	0.000	0.000	0.00
		B	0.000	0.000	7.102	0.000	0.59
		C	0.000	0.000	0.000	0.000	0.38
L3	44.42-1.75	A	0.000	0.000	0.000	0.000	0.00
		B	0.000	0.000	8.517	0.000	0.70
		C	0.000	0.000	0.000	0.000	0.54
L4	1.75-0.00	A	0.000	0.000	0.000	0.000	0.00
		B	0.000	0.000	0.349	0.000	0.03
		C	0.000	0.000	0.000	0.000	0.02

Feed Line/Linear Appurtenances Section Areas - With Ice

Tower Section	Tower Elevation ft	Face or Leg	Ice Thickness in	A_R ft²	A_F ft²	C_AA_A In Face ft²	C_AA_A Out Face ft²	Weight K
L1	100.50-80.00	A	1.409	0.000	0.000	0.000	0.000	0.00
		B		0.000	0.000	5.777	0.000	0.23
		C		0.000	0.000	0.000	0.000	0.14
L2	80.00-44.42	A	1.357	0.000	0.000	0.000	0.000	0.00
		B		0.000	0.000	17.130	0.000	0.79
		C		0.000	0.000	0.000	0.000	0.38
L3	44.42-1.75	A	1.229	0.000	0.000	0.000	0.000	0.00
		B		0.000	0.000	20.096	0.000	0.94
		C		0.000	0.000	0.000	0.000	0.54
L4	1.75-0.00	A	0.887	0.000	0.000	0.000	0.000	0.00
		B		0.000	0.000	0.660	0.000	0.03
		C		0.000	0.000	0.000	0.000	0.02

Feed Line Center of Pressure

Section	Elevation ft	CP_X in	CP_Z in	CP_X Ice in	CP_Z Ice in
L1	100.50-80.00	0.7713	0.0000	1.2361	0.0000
L2	80.00-44.42	1.2026	0.0000	1.9649	0.0000
L3	44.42-1.75	1.2070	0.0000	2.0163	0.0000
L4	1.75-0.00	1.2083	0.0000	1.6926	0.0000

Note: For pole sections, center of pressure calculations do not consider feed line shielding.

Shielding Factor Ka

Tower Section	Feed Line Record No.	Description	Feed Line Segment Elev.	K_a No Ice	K_a Ice
L1	8	HB158-21U6S24-xxM_TMO(1-5/8)	80.00 - 92.00	1.0000	1.0000
L2	8	HB158-21U6S24-xxM_TMO(1-5/8)	44.42 - 80.00	1.0000	1.0000
L3	8	HB158-21U6S24-xxM_TMO(1-5/8)	1.75 - 44.42	1.0000	1.0000
L4	8	HB158-21U6S24-xxM_TMO(1-5/8)	0.00 - 1.75	1.0000	1.0000

Discrete Tower Loads

Description	Face or Leg	Offset Type	Offsets: Horz Lateral Vert ft ft ft	Azimuth Adjustment °	Placement ft		C_AA_A Front ft²	C_AA_A Side ft²	Weight K
***									
DBXNH-8585B-A2M w/ Mount Pipe	A	From Leg	3.00 0.00	0.0000	103.00	No Ice 1/2"	3.92 4.30	3.16 3.52	0.08 0.14

Description	Face or Leg	Offset Type	Offsets: Horz Lateral Vert ft ft ft	Azimuth Adjustment °	Placement ft		C_AA_A Front ft^2	C_AA_A Side ft^2	Weight K
			2.00			Ice	4.68	3.90	0.21
						1" Ice	5.48	4.68	0.39
						2" Ice			
DBXNH-8585B-A2M w/ Mount Pipe	B	From Leg	3.00	0.0000	103.00	No Ice	3.92	3.16	0.08
			0.00			1/2"	4.30	3.52	0.14
			2.00			Ice	4.68	3.90	0.21
						1" Ice	5.48	4.68	0.39
						2" Ice			
DBXNH-8585B-A2M w/ Mount Pipe	C	From Leg	3.00	0.0000	103.00	No Ice	3.92	3.16	0.08
			0.00			1/2"	4.30	3.52	0.14
			2.00			Ice	4.68	3.90	0.21
						1" Ice	5.48	4.68	0.39
						2" Ice			
(2) NHH-65B-R2B w/ Mount Pipe	A	From Leg	6.00	0.0000	103.00	No Ice	4.09	3.29	0.07
			0.00			1/2"	4.48	3.67	0.13
			2.00			Ice	4.88	4.06	0.21
						1" Ice	5.70	4.86	0.39
						2" Ice			
(2) NHH-65B-R2B w/ Mount Pipe	B	From Leg	6.00	0.0000	103.00	No Ice	4.09	3.29	0.07
			0.00			1/2"	4.48	3.67	0.13
			2.00			Ice	4.88	4.06	0.21
						1" Ice	5.70	4.86	0.39
						2" Ice			
(2) NHH-65B-R2B w/ Mount Pipe	C	From Leg	6.00	0.0000	103.00	No Ice	4.09	3.29	0.07
			0.00			1/2"	4.48	3.67	0.13
			2.00			Ice	4.88	4.06	0.21
						1" Ice	5.70	4.86	0.39
						2" Ice			
AHBCC	A	From Leg	3.00	0.0000	103.00	No Ice	2.23	1.39	0.09
			0.00			1/2"	2.42	1.55	0.11
			2.00			Ice	2.62	1.72	0.13
						1" Ice	3.05	2.08	0.18
						2" Ice			
AHBCC	B	From Leg	3.00	0.0000	103.00	No Ice	2.23	1.39	0.09
			0.00			1/2"	2.42	1.55	0.11
			2.00			Ice	2.62	1.72	0.13
						1" Ice	3.05	2.08	0.18
						2" Ice			
AHBCC	C	From Leg	3.00	0.0000	103.00	No Ice	2.23	1.39	0.09
			0.00			1/2"	2.42	1.55	0.11
			2.00			Ice	2.62	1.72	0.13
						1" Ice	3.05	2.08	0.18
						2" Ice			
AHFIC	A	From Leg	3.00	0.0000	103.00	No Ice	2.23	1.34	0.08
			0.00			1/2"	2.42	1.50	0.10
			2.00			Ice	2.62	1.66	0.12
						1" Ice	3.05	2.02	0.17
						2" Ice			
AHFIC	B	From Leg	3.00	0.0000	103.00	No Ice	2.23	1.34	0.08
			0.00			1/2"	2.42	1.50	0.10
			2.00			Ice	2.62	1.66	0.12
						1" Ice	3.05	2.02	0.17
						2" Ice			
AHFIC	C	From Leg	3.00	0.0000	103.00	No Ice	2.23	1.34	0.08
			0.00			1/2"	2.42	1.50	0.10
			2.00			Ice	2.62	1.66	0.12
						1" Ice	3.05	2.02	0.17
						2" Ice			
RC3DC-3315-PF-48	B	From Leg	3.00	0.0000	103.00	No Ice	3.79	2.51	0.03
			0.00			1/2"	4.04	2.72	0.06
			1.00			Ice	4.30	2.94	0.10
						1" Ice	4.84	3.41	0.18
						2" Ice			
RXXDC-3315-PF-48	A	From Leg	3.00	0.0000	103.00	No Ice	3.01	1.96	0.02
			0.00			1/2"	3.23	2.15	0.05

Description	Face or Leg	Offset Type	Offsets: Horz Lateral Vert ft ft ft	Azimuth Adjustment °	Placement ft		C_AA_A Front ft^2	C_AA_A Side ft^2	Weight K
			1.00			Ice	3.46	2.35	0.08
						1" Ice	3.93	2.76	0.15
						2" Ice			
RXXDC-3315-PF-48	C	From Leg	3.00	0.0000	103.00	No Ice	3.01	1.96	0.02
			0.00			1/2"	3.23	2.15	0.05
			1.00			Ice	3.46	2.35	0.08
						1" Ice	3.93	2.76	0.15
						2" Ice			
(2) 6' x 2" Mount Pipe	A	From Leg	3.00	0.0000	103.00	No Ice	1.43	1.43	0.02
			0.00			1/2"	1.92	1.92	0.03
			0.00			Ice	2.29	2.29	0.05
						1" Ice	3.06	3.06	0.09
						2" Ice			
(2) 6' x 2" Mount Pipe	A	From Leg	3.00	0.0000	103.00	No Ice	1.43	1.43	0.02
			0.00			1/2"	1.92	1.92	0.03
			0.00			Ice	2.29	2.29	0.05
						1" Ice	3.06	3.06	0.09
						2" Ice			
(2) 6' x 2" Mount Pipe	B	From Leg	3.00	0.0000	103.00	No Ice	1.43	1.43	0.02
			0.00			1/2"	1.92	1.92	0.03
			0.00			Ice	2.29	2.29	0.05
						1" Ice	3.06	3.06	0.09
						2" Ice			
(2) 6' x 2" Mount Pipe	B	From Leg	3.00	0.0000	103.00	No Ice	1.43	1.43	0.02
			0.00			1/2"	1.92	1.92	0.03
			0.00			Ice	2.29	2.29	0.05
						1" Ice	3.06	3.06	0.09
						2" Ice			
(2) 6' x 2" Mount Pipe	C	From Leg	3.00	0.0000	103.00	No Ice	1.43	1.43	0.02
			0.00			1/2"	1.92	1.92	0.03
			0.00			Ice	2.29	2.29	0.05
						1" Ice	3.06	3.06	0.09
						2" Ice			
(2) 6' x 2" Mount Pipe	C	From Leg	3.00	0.0000	103.00	No Ice	1.43	1.43	0.02
			0.00			1/2"	1.92	1.92	0.03
			0.00			Ice	2.29	2.29	0.05
						1" Ice	3.06	3.06	0.09
						2" Ice			
Side Arm Mount [SO 702-3]	A	None		0.0000	103.00	No Ice	2.53	2.53	0.08
						1/2"	3.37	3.37	0.13
						Ice	4.12	4.12	0.19
						1" Ice	5.76	5.76	0.36
						2" Ice			
Miscellaneous [NA 508-3]	A	None		0.0000	103.00	No Ice	10.62	10.62	0.56
						1/2"	13.64	13.64	0.72
						Ice	16.86	16.86	0.92
						1" Ice	24.12	24.12	1.52
						2" Ice			
***									
APXVAALL24_43-U-NA20_TMO w/ Mount Pipe	A	From Leg	4.00	0.0000	92.00	No Ice	14.69	6.87	0.18
			0.00			1/2"	15.46	7.55	0.31
			1.00			Ice	16.23	8.25	0.45
						1" Ice	17.82	9.67	0.78
						2" Ice			
APXVAALL24_43-U-NA20_TMO w/ Mount Pipe	B	From Leg	4.00	0.0000	92.00	No Ice	14.69	6.87	0.18
			0.00			1/2"	15.46	7.55	0.31
			1.00			Ice	16.23	8.25	0.45
						1" Ice	17.82	9.67	0.78
						2" Ice			
APXVAALL24_43-U-NA20_TMO w/ Mount Pipe	C	From Leg	4.00	0.0000	92.00	No Ice	14.69	6.87	0.18
			0.00			1/2"	15.46	7.55	0.31
			1.00			Ice	16.23	8.25	0.45
						1" Ice	17.82	9.67	0.78
						2" Ice			
RADIO 4449 B71 B85A_T-	A	From Leg	4.00	0.0000	92.00	No Ice	1.97	1.59	0.07

Description	Face or Leg	Offset Type	Offsets: Horz Lateral Vert ft ft ft	Azimuth Adjustment °	Placement ft		C_AA_A Front ft^2	C_AA_A Side ft^2	Weight K
MOBILE			0.00			1/2"	2.15	1.75	0.09
			1.00			Ice	2.33	1.92	0.12
						1" Ice	2.72	2.28	0.17
						2" Ice			
RADIO 4449 B71 B85A_T-MOBILE	B	From Leg	4.00	0.0000	92.00	No Ice	1.97	1.59	0.07
			0.00			1/2"	2.15	1.75	0.09
			1.00			Ice	2.33	1.92	0.12
						1" Ice	2.72	2.28	0.17
						2" Ice			
RADIO 4449 B71 B85A_T-MOBILE	C	From Leg	4.00	0.0000	92.00	No Ice	1.97	1.59	0.07
			0.00			1/2"	2.15	1.75	0.09
			1.00			Ice	2.33	1.92	0.12
						1" Ice	2.72	2.28	0.17
						2" Ice			
APX16DWV-16DWVS-C w/ Mount Pipe	A	From Leg	4.00	0.0000	92.00	No Ice	6.29	2.76	0.06
			0.00			1/2"	6.86	3.27	0.11
			1.00			Ice	7.45	3.79	0.16
						1" Ice	8.68	4.90	0.29
						2" Ice			
APX16DWV-16DWVS-C w/ Mount Pipe	B	From Leg	4.00	0.0000	92.00	No Ice	6.29	2.76	0.06
			0.00			1/2"	6.86	3.27	0.11
			1.00			Ice	7.45	3.79	0.16
						1" Ice	8.68	4.90	0.29
						2" Ice			
APX16DWV-16DWVS-C w/ Mount Pipe	C	From Leg	4.00	0.0000	92.00	No Ice	6.29	2.76	0.06
			0.00			1/2"	6.86	3.27	0.11
			1.00			Ice	7.45	3.79	0.16
						1" Ice	8.68	4.90	0.29
						2" Ice			
ETM19V2S12UB	A	From Leg	4.00	0.0000	92.00	No Ice	0.72	0.20	0.01
			0.00			1/2"	0.82	0.27	0.02
			1.00			Ice	0.94	0.35	0.02
						1" Ice	1.19	0.53	0.04
						2" Ice			
ETM19V2S12UB	B	From Leg	4.00	0.0000	92.00	No Ice	0.72	0.20	0.01
			0.00			1/2"	0.82	0.27	0.02
			1.00			Ice	0.94	0.35	0.02
						1" Ice	1.19	0.53	0.04
						2" Ice			
ETM19V2S12UB	C	From Leg	4.00	0.0000	92.00	No Ice	0.72	0.20	0.01
			0.00			1/2"	0.82	0.27	0.02
			1.00			Ice	0.94	0.35	0.02
						1" Ice	1.19	0.53	0.04
						2" Ice			
TMAT7LA-11A	A	From Leg	4.00	0.0000	92.00	No Ice	0.64	0.35	0.02
			0.00			1/2"	0.75	0.42	0.03
			1.00			Ice	0.86	0.51	0.04
						1" Ice	1.10	0.69	0.06
						2" Ice			
TMAT7LA-11A	B	From Leg	4.00	0.0000	92.00	No Ice	0.64	0.35	0.02
			0.00			1/2"	0.75	0.42	0.03
			1.00			Ice	0.86	0.51	0.04
						1" Ice	1.10	0.69	0.06
						2" Ice			
TMAT7LA-11A	C	From Leg	4.00	0.0000	92.00	No Ice	0.64	0.35	0.02
			0.00			1/2"	0.75	0.42	0.03
			1.00			Ice	0.86	0.51	0.04
						1" Ice	1.10	0.69	0.06
						2" Ice			
(2) 6' x 2" Mount Pipe	A	From Leg	4.00	0.0000	92.00	No Ice	1.43	1.43	0.02
			4.00			1/2"	1.92	1.92	0.03
			0.00			Ice	2.29	2.29	0.05
						1" Ice	3.06	3.06	0.09
						2" Ice			
(2) 6' x 2" Mount Pipe	B	From Leg	4.00	0.0000	92.00	No Ice	1.43	1.43	0.02

Description	Face or Leg	Offset Type	Offsets: Horz Lateral Vert ft ft ft	Azimuth Adjustment °	Placement ft		C_AA_A Front ft^2	C_AA_A Side ft^2	Weight K
			4.00 0.00			1/2" Ice 1" Ice 2" Ice	1.92 2.29 3.06	1.92 2.29 3.06	0.03 0.05 0.09
(2) 6' x 2" Mount Pipe	C	From Leg	4.00 4.00 0.00	0.0000	92.00	No Ice 1/2" Ice 1" Ice 2" Ice	1.43 1.92 2.29 3.06	1.43 1.92 2.29 3.06	0.02 0.03 0.05 0.09
T-Arm Mount [TA 602-3]	A	None		0.0000	92.00	No Ice 1/2" Ice 1" Ice 2" Ice	13.40 16.44 19.70 25.86	13.40 16.44 19.70 25.86	0.77 1.00 1.29 2.05
******									
(2) DB844H90E-XY w/ Mount Pipe	A	From Leg	6.00 0.00 2.00	0.0000	83.00	No Ice 1/2" Ice 1" Ice 2" Ice	2.24 2.61 2.99 3.78	3.34 3.73 4.13 4.97	0.04 0.08 0.12 0.23
(2) DB844H90E-XY w/ Mount Pipe	B	From Leg	6.00 0.00 2.00	0.0000	83.00	No Ice 1/2" Ice 1" Ice 2" Ice	2.24 2.61 2.99 3.78	3.34 3.73 4.13 4.97	0.04 0.08 0.12 0.23
(2) DB844H90E-XY w/ Mount Pipe	C	From Leg	6.00 0.00 2.00	0.0000	83.00	No Ice 1/2" Ice 1" Ice 2" Ice	2.24 2.61 2.99 3.78	3.34 3.73 4.13 4.97	0.04 0.08 0.12 0.23
(2) DB844H90E-XY w/ Mount Pipe	A	From Leg	3.00 0.00 2.00	0.0000	83.00	No Ice 1/2" Ice 1" Ice 2" Ice	2.24 2.61 2.99 3.78	3.34 3.73 4.13 4.97	0.04 0.08 0.12 0.23
(2) DB844H90E-XY w/ Mount Pipe	B	From Leg	3.00 0.00 2.00	0.0000	83.00	No Ice 1/2" Ice 1" Ice 2" Ice	2.24 2.61 2.99 3.78	3.34 3.73 4.13 4.97	0.04 0.08 0.12 0.23
(2) DB844H90E-XY w/ Mount Pipe	C	From Leg	3.00 0.00 2.00	0.0000	83.00	No Ice 1/2" Ice 1" Ice 2" Ice	2.24 2.61 2.99 3.78	3.34 3.73 4.13 4.97	0.04 0.08 0.12 0.23
GPS_A	A	From Leg	3.00 0.00 4.00	0.0000	83.00	No Ice 1/2" Ice 1" Ice 2" Ice	0.26 0.32 0.39 0.56	0.26 0.32 0.39 0.56	0.00 0.00 0.01 0.02
GPS_A	B	From Leg	3.00 0.00 4.00	0.0000	83.00	No Ice 1/2" Ice 1" Ice 2" Ice	0.26 0.32 0.39 0.56	0.26 0.32 0.39 0.56	0.00 0.00 0.01 0.02
Side Arm Mount [SO 101-3]	C	None		0.0000	83.00	No Ice 1/2" Ice 1" Ice 2" Ice	5.81 6.95 8.28 11.54	5.81 6.95 8.28 11.54	0.25 0.34 0.46 0.78
Side Arm Mount [SO 701-3]	C	None		0.0000	83.00	No Ice 1/2" Ice 1" Ice 2" Ice	3.02 4.18 5.33 7.63	3.02 4.18 5.33 7.63	0.20 0.24 0.28 0.36

Description	Face or Leg	Offset Type	Offsets: Horz Lateral Vert ft ft ft	Azimuth Adjustment °	Placement ft		C_AA_A Front ft^2	C_AA_A Side ft^2	Weight K
Miscellaneous [NA 508-3]	C	None		0.0000	83.00	No Ice	10.62	10.62	0.56
						1/2" Ice	13.64	13.64	0.72
						1" Ice	16.86	16.86	0.92
						2" Ice	24.12	24.12	1.52
***									
APXVSPP18-C-A20	A	From Leg	4.00	0.0000	71.00	No Ice	4.66	3.11	0.07
			0.00			1/2" Ice	5.12	3.55	0.12
			0.00			1" Ice	5.60	4.00	0.18
						2" Ice	6.58	4.94	0.32
APXVSPP18-C-A20	B	From Leg	4.00	0.0000	71.00	No Ice	4.66	3.11	0.07
			0.00			1/2" Ice	5.12	3.55	0.12
			0.00			1" Ice	5.60	4.00	0.18
						2" Ice	6.58	4.94	0.32
APXVSPP18-C-A20	C	From Leg	4.00	0.0000	71.00	No Ice	4.66	3.11	0.07
			0.00			1/2" Ice	5.12	3.55	0.12
			0.00			1" Ice	5.60	4.00	0.18
						2" Ice	6.58	4.94	0.32
800MHZ RRH	A	From Leg	4.00	0.0000	71.00	No Ice	2.13	1.77	0.05
			0.00			1/2" Ice	2.32	1.95	0.07
			0.00			1" Ice	2.51	2.13	0.10
						2" Ice	2.92	2.51	0.16
800MHZ RRH	B	From Leg	4.00	0.0000	71.00	No Ice	2.13	1.77	0.05
			0.00			1/2" Ice	2.32	1.95	0.07
			0.00			1" Ice	2.51	2.13	0.10
						2" Ice	2.92	2.51	0.16
800MHZ RRH	C	From Leg	4.00	0.0000	71.00	No Ice	2.13	1.77	0.05
			0.00			1/2" Ice	2.32	1.95	0.07
			0.00			1" Ice	2.51	2.13	0.10
						2" Ice	2.92	2.51	0.16
800 EXTERNAL NOTCH FILTER	A	From Leg	4.00	0.0000	71.00	No Ice	0.66	0.32	0.01
			0.00			1/2" Ice	0.76	0.40	0.02
			0.00			1" Ice	0.87	0.48	0.02
						2" Ice	1.11	0.67	0.04
800 EXTERNAL NOTCH FILTER	B	From Leg	4.00	0.0000	71.00	No Ice	0.66	0.32	0.01
			0.00			1/2" Ice	0.76	0.40	0.02
			0.00			1" Ice	0.87	0.48	0.02
						2" Ice	1.11	0.67	0.04
800 EXTERNAL NOTCH FILTER	C	From Leg	4.00	0.0000	71.00	No Ice	0.66	0.32	0.01
			0.00			1/2" Ice	0.76	0.40	0.02
			0.00			1" Ice	0.87	0.48	0.02
						2" Ice	1.11	0.67	0.04
1900MHZ RRH (65MHZ)	A	From Leg	4.00	0.0000	71.00	No Ice	2.31	2.38	0.06
			0.00			1/2" Ice	2.52	2.58	0.08
			0.00			1" Ice	2.73	2.79	0.11
						2" Ice	3.17	3.24	0.18
1900MHZ RRH (65MHZ)	B	From Leg	4.00	0.0000	71.00	No Ice	2.31	2.38	0.06
			0.00			1/2" Ice	2.52	2.58	0.08
			0.00			1" Ice	2.73	2.79	0.11
						2" Ice	3.17	3.24	0.18
1900MHZ RRH (65MHZ)	C	From Leg	4.00	0.0000	71.00	No Ice	2.31	2.38	0.06
			0.00			1/2" Ice	2.52	2.58	0.08
			0.00			1" Ice	2.73	2.79	0.11
						1" Ice	3.17	3.24	0.18

Description	Face or Leg	Offset Type	Offsets: Horz Lateral Vert ft ft ft	Azimuth Adjustment °	Placement ft		C_AA_A Front ft^2	C_AA_A Side ft^2	Weight K
						2" Ice			
(3) ACU-A20-N	A	From Leg	4.00	0.0000	71.00	No Ice	0.07	0.12	0.00
			0.00			1/2"	0.10	0.16	0.00
			0.00			Ice	0.15	0.21	0.00
						1" Ice	0.26	0.34	0.01
						2" Ice			
(3) ACU-A20-N	B	From Leg	4.00	0.0000	71.00	No Ice	0.07	0.12	0.00
			0.00			1/2"	0.10	0.16	0.00
			0.00			Ice	0.15	0.21	0.00
						1" Ice	0.26	0.34	0.01
						2" Ice			
(3) ACU-A20-N	C	From Leg	4.00	0.0000	71.00	No Ice	0.07	0.12	0.00
			0.00			1/2"	0.10	0.16	0.00
			0.00			Ice	0.15	0.21	0.00
						1" Ice	0.26	0.34	0.01
						2" Ice			
Miscellaneous [NA 508-3]	A	None		0.0000	71.00	No Ice	10.62	10.62	0.56
						1/2"	13.64	13.64	0.72
						Ice	16.86	16.86	0.92
						1" Ice	24.12	24.12	1.52
						2" Ice			
GPS_A	C	From Leg	4.00	0.0000	71.00	No Ice	0.26	0.26	0.00
			0.00			1/2"	0.32	0.32	0.00
			2.00			Ice	0.39	0.39	0.01
						1" Ice	0.56	0.56	0.02
						2" Ice			
61									
MX08FRO665-21 w/ Mount Pipe	A	From Leg	4.00	0.0000	61.00	No Ice	8.01	4.23	0.11
			0.00			1/2"	8.52	4.69	0.19
			0.00			Ice	9.04	5.16	0.29
						1" Ice	10.11	6.12	0.52
						2" Ice			
MX08FRO665-21 w/ Mount Pipe	B	From Leg	4.00	0.0000	61.00	No Ice	8.01	4.23	0.11
			0.00			1/2"	8.52	4.69	0.19
			0.00			Ice	9.04	5.16	0.29
						1" Ice	10.11	6.12	0.52
						2" Ice			
MX08FRO665-21 w/ Mount Pipe	C	From Leg	4.00	0.0000	61.00	No Ice	8.01	4.23	0.11
			0.00			1/2"	8.52	4.69	0.19
			0.00			Ice	9.04	5.16	0.29
						1" Ice	10.11	6.12	0.52
						2" Ice			
TA08025-B604	A	From Leg	4.00	0.0000	61.00	No Ice	1.96	0.98	0.06
			0.00			1/2"	2.14	1.11	0.08
			0.00			Ice	2.32	1.25	0.10
						1" Ice	2.71	1.55	0.15
						2" Ice			
TA08025-B604	B	From Leg	4.00	0.0000	61.00	No Ice	1.96	0.98	0.06
			0.00			1/2"	2.14	1.11	0.08
			0.00			Ice	2.32	1.25	0.10
						1" Ice	2.71	1.55	0.15
						2" Ice			
TA08025-B604	C	From Leg	4.00	0.0000	61.00	No Ice	1.96	0.98	0.06
			0.00			1/2"	2.14	1.11	0.08
			0.00			Ice	2.32	1.25	0.10
						1" Ice	2.71	1.55	0.15
						2" Ice			
TA08025-B605	A	From Leg	4.00	0.0000	61.00	No Ice	1.96	1.13	0.08
			0.00			1/2"	2.14	1.27	0.09
			0.00			Ice	2.32	1.41	0.11
						1" Ice	2.71	1.72	0.16
						2" Ice			
TA08025-B605	B	From Leg	4.00	0.0000	61.00	No Ice	1.96	1.13	0.08
			0.00			1/2"	2.14	1.27	0.09
			0.00			Ice	2.32	1.41	0.11

Description	Face or Leg	Offset Type	Offsets: Horz Lateral Vert ft ft ft	Azimuth Adjustment °	Placement ft		C_AA_A Front ft^2	C_AA_A Side ft^2	Weight K
						1" Ice	2.71	1.72	0.16
						2" Ice			
TA08025-B605	C	From Leg	4.00	0.0000	61.00	No Ice	1.96	1.13	0.08
			0.00			1/2"	2.14	1.27	0.09
			0.00			Ice	2.32	1.41	0.11
						1" Ice	2.71	1.72	0.16
						2" Ice			
RDIDC-9181-PF-48	A	From Leg	4.00	0.0000	61.00	No Ice	2.31	1.29	0.02
			0.00			1/2"	2.50	1.45	0.04
			0.00			Ice	2.70	1.61	0.06
						1" Ice	3.12	1.96	0.12
						2" Ice			
(2) 8' x 2" Mount Pipe	A	From Leg	4.00	0.0000	61.00	No Ice	1.90	1.90	0.03
			4.00			1/2"	2.73	2.73	0.04
			0.00			Ice	3.40	3.40	0.06
						1" Ice	4.40	4.40	0.12
						2" Ice			
(2) 8' x 2" Mount Pipe	B	From Leg	4.00	0.0000	61.00	No Ice	1.90	1.90	0.03
			4.00			1/2"	2.73	2.73	0.04
			0.00			Ice	3.40	3.40	0.06
						1" Ice	4.40	4.40	0.12
						2" Ice			
(2) 8' x 2" Mount Pipe	C	From Leg	4.00	0.0000	61.00	No Ice	1.90	1.90	0.03
			4.00			1/2"	2.73	2.73	0.04
			0.00			Ice	3.40	3.40	0.06
						1" Ice	4.40	4.40	0.12
						2" Ice			
Commscope MC-PK8-DSH	A	None		0.0000	61.00	No Ice	34.24	34.24	1.75
						1/2"	62.95	62.95	2.10
						Ice	91.66	91.66	2.45
						1" Ice	149.08	149.08	3.15
						2" Ice			
******									
***									

Load Combinations

Comb. No.	Description
1	Dead Only
2	1.2 Dead+1.0 Wind 0 deg - No Ice
3	0.9 Dead+1.0 Wind 0 deg - No Ice
4	1.2 Dead+1.0 Wind 30 deg - No Ice
5	0.9 Dead+1.0 Wind 30 deg - No Ice
6	1.2 Dead+1.0 Wind 60 deg - No Ice
7	0.9 Dead+1.0 Wind 60 deg - No Ice
8	1.2 Dead+1.0 Wind 90 deg - No Ice
9	0.9 Dead+1.0 Wind 90 deg - No Ice
10	1.2 Dead+1.0 Wind 120 deg - No Ice
11	0.9 Dead+1.0 Wind 120 deg - No Ice
12	1.2 Dead+1.0 Wind 150 deg - No Ice
13	0.9 Dead+1.0 Wind 150 deg - No Ice
14	1.2 Dead+1.0 Wind 180 deg - No Ice
15	0.9 Dead+1.0 Wind 180 deg - No Ice
16	1.2 Dead+1.0 Wind 210 deg - No Ice
17	0.9 Dead+1.0 Wind 210 deg - No Ice
18	1.2 Dead+1.0 Wind 240 deg - No Ice
19	0.9 Dead+1.0 Wind 240 deg - No Ice
20	1.2 Dead+1.0 Wind 270 deg - No Ice

Comb. No.	Description
21	0.9 Dead+1.0 Wind 270 deg - No Ice
22	1.2 Dead+1.0 Wind 300 deg - No Ice
23	0.9 Dead+1.0 Wind 300 deg - No Ice
24	1.2 Dead+1.0 Wind 330 deg - No Ice
25	0.9 Dead+1.0 Wind 330 deg - No Ice
26	1.2 Dead+1.0 Ice+1.0 Temp
27	1.2 Dead+1.0 Wind 0 deg+1.0 Ice+1.0 Temp
28	1.2 Dead+1.0 Wind 30 deg+1.0 Ice+1.0 Temp
29	1.2 Dead+1.0 Wind 60 deg+1.0 Ice+1.0 Temp
30	1.2 Dead+1.0 Wind 90 deg+1.0 Ice+1.0 Temp
31	1.2 Dead+1.0 Wind 120 deg+1.0 Ice+1.0 Temp
32	1.2 Dead+1.0 Wind 150 deg+1.0 Ice+1.0 Temp
33	1.2 Dead+1.0 Wind 180 deg+1.0 Ice+1.0 Temp
34	1.2 Dead+1.0 Wind 210 deg+1.0 Ice+1.0 Temp
35	1.2 Dead+1.0 Wind 240 deg+1.0 Ice+1.0 Temp
36	1.2 Dead+1.0 Wind 270 deg+1.0 Ice+1.0 Temp
37	1.2 Dead+1.0 Wind 300 deg+1.0 Ice+1.0 Temp
38	1.2 Dead+1.0 Wind 330 deg+1.0 Ice+1.0 Temp
39	Dead+Wind 0 deg - Service
40	Dead+Wind 30 deg - Service
41	Dead+Wind 60 deg - Service
42	Dead+Wind 90 deg - Service
43	Dead+Wind 120 deg - Service
44	Dead+Wind 150 deg - Service
45	Dead+Wind 180 deg - Service
46	Dead+Wind 210 deg - Service
47	Dead+Wind 240 deg - Service
48	Dead+Wind 270 deg - Service
49	Dead+Wind 300 deg - Service
50	Dead+Wind 330 deg - Service

Maximum Member Forces

Section No.	Elevation ft	Component Type	Condition	Gov. Load Comb.	Axial K	Major Axis Moment kip-ft	Minor Axis Moment kip-ft
L1	100.5 - 80	Pole	Max Tension	26	0.00	0.00	0.00
			Max. Compression	26	-13.69	-0.17	-0.01
			Max. Mx	8	-5.46	-109.60	-0.09
			Max. My	14	-5.46	-0.15	-109.44
			Max. Vy	8	7.46	-109.60	-0.09
			Max. Vx	2	-7.45	0.03	109.43
			Max. Torque	4			-0.09
L2	80 - 44.42	Pole	Max Tension	1	0.00	0.00	0.00
			Max. Compression	26	-32.81	-0.45	0.59
			Max. Mx	8	-15.86	-542.44	-0.06
			Max. My	2	-15.86	0.07	542.57
			Max. Vy	8	15.95	-542.44	-0.06
			Max. Vx	2	-15.98	0.07	542.57
			Max. Torque	10			0.17
L3	44.42 - 1.75	Pole	Max Tension	1	0.00	0.00	0.00
			Max. Compression	26	-44.72	-0.98	0.90
			Max. Mx	8	-25.23	-1376.44	-0.15
			Max. My	2	-25.23	0.08	1377.70
			Max. Vy	8	19.46	-1376.44	-0.15
			Max. Vx	2	-19.48	0.08	1377.70
			Max. Torque	10			0.17
L4	1.75 - 0	Pole	Max Tension	1	0.00	0.00	0.00
			Max. Compression	26	-45.16	-1.00	0.91
			Max. Mx	8	-25.62	-1410.57	-0.15
			Max. My	2	-25.62	0.08	1411.87
			Max. Vy	8	19.58	-1410.57	-0.15
			Max. Vx	2	-19.61	0.08	1411.87
			Max. Torque	10			0.17

Maximum Reactions

Location	Condition	Gov. Load Comb.	Vertical K	Horizontal, X K	Horizontal, Z K
Pole	Max. Vert	27	45.16	0.00	5.87
	Max. H_x	20	25.63	19.56	0.00
	Max. H_z	2	25.63	0.00	19.59
	Max. M_x	2	1411.87	0.00	19.59
	Max. M_z	8	1410.57	-19.56	-0.00
	Max. Torsion	10	0.17	-16.94	-9.80
	Min. Vert	19	19.22	16.94	-9.79
	Min. H_x	8	25.63	-19.56	-0.00
	Min. H_z	14	25.63	-0.00	-19.59
	Min. M_x	14	-1411.28	-0.00	-19.59
	Min. M_z	20	-1409.83	19.56	0.00
	Min. Torsion	22	-0.17	16.94	9.80

Tower Mast Reaction Summary

Load Combination	Vertical K	$Shear_x$ K	$Shear_z$ K	Overturning Moment, M_x kip-ft	Overturning Moment, M_z kip-ft	Torque kip-ft
Dead Only	21.36	0.00	0.00	-0.24	-0.30	0.00
1.2 Dead+1.0 Wind 0 deg - No Ice	25.63	-0.00	-19.59	-1411.87	0.08	0.07
0.9 Dead+1.0 Wind 0 deg - No Ice	19.22	-0.00	-19.59	-1399.79	0.17	0.07
1.2 Dead+1.0 Wind 30 deg - No Ice	25.63	9.78	-16.96	-1222.53	-705.09	-0.02
0.9 Dead+1.0 Wind 30 deg - No Ice	19.22	9.78	-16.96	-1212.07	-699.00	-0.02
1.2 Dead+1.0 Wind 60 deg - No Ice	25.63	16.94	-9.79	-705.70	-1221.42	-0.10
0.9 Dead+1.0 Wind 60 deg - No Ice	19.22	16.94	-9.79	-699.62	-1210.94	-0.10
1.2 Dead+1.0 Wind 90 deg - No Ice	25.63	19.56	0.00	0.15	-1410.57	-0.15
0.9 Dead+1.0 Wind 90 deg - No Ice	19.22	19.56	0.00	0.23	-1398.49	-0.15
1.2 Dead+1.0 Wind 120 deg - No Ice	25.63	16.94	9.80	705.88	-1221.87	-0.17
0.9 Dead+1.0 Wind 120 deg - No Ice	19.22	16.94	9.80	699.95	-1211.38	-0.17
1.2 Dead+1.0 Wind 150 deg - No Ice	25.63	9.78	16.97	1222.39	-705.86	-0.14
0.9 Dead+1.0 Wind 150 deg - No Ice	19.22	9.78	16.97	1212.07	-699.77	-0.14
1.2 Dead+1.0 Wind 180 deg - No Ice	25.63	0.00	19.59	1411.28	-0.82	-0.07
0.9 Dead+1.0 Wind 180 deg - No Ice	19.22	0.00	19.59	1399.36	-0.72	-0.07
1.2 Dead+1.0 Wind 210 deg - No Ice	25.63	-9.78	16.96	1221.94	704.34	0.02
0.9 Dead+1.0 Wind 210 deg - No Ice	19.22	-9.78	16.96	1211.63	698.45	0.02
1.2 Dead+1.0 Wind 240 deg - No Ice	25.63	-16.94	9.79	705.10	1220.68	0.10
0.9 Dead+1.0 Wind 240 deg - No Ice	19.22	-16.94	9.79	699.18	1210.39	0.10
1.2 Dead+1.0 Wind 270 deg - No Ice	25.63	-19.56	-0.00	-0.75	1409.83	0.15
0.9 Dead+1.0 Wind 270 deg - No Ice	19.22	-19.56	-0.00	-0.66	1397.94	0.15
1.2 Dead+1.0 Wind 300 deg - No Ice	25.63	-16.94	-9.80	-706.47	1221.13	0.17
0.9 Dead+1.0 Wind 300 deg	19.22	-16.94	-9.80	-700.39	1210.83	0.16

Load Combination	Vertical K	$Shear_x$ K	$Shear_z$ K	Overturning Moment, M_x kip-ft	Overturning Moment, M_z kip-ft	Torque kip-ft
- No Ice 1.2 Dead+1.0 Wind 330 deg	25.63	-9.78	-16.97	-1222.98	705.12	0.13
- No Ice 0.9 Dead+1.0 Wind 330 deg	19.22	-9.78	-16.97	-1212.51	699.22	0.13
- No Ice 1.2 Dead+1.0 Ice+1.0 Temp	45.16	0.00	0.00	-0.91	-1.00	0.00
1.2 Dead+1.0 Wind 0 deg+1.0 Ice+1.0 Temp	45.16	-0.00	-5.87	-441.33	-0.99	0.02
1.2 Dead+1.0 Wind 30 deg+1.0 Ice+1.0 Temp	45.16	2.93	-5.08	-382.29	-221.02	-0.01
1.2 Dead+1.0 Wind 60 deg+1.0 Ice+1.0 Temp	45.16	5.08	-2.93	-221.08	-382.13	-0.03
1.2 Dead+1.0 Wind 90 deg+1.0 Ice+1.0 Temp	45.16	5.86	0.00	-0.89	-441.13	-0.04
1.2 Dead+1.0 Wind 120 deg+1.0 Ice+1.0 Temp	45.16	5.08	2.93	219.26	-382.23	-0.05
1.2 Dead+1.0 Wind 150 deg+1.0 Ice+1.0 Temp	45.16	2.93	5.08	380.40	-221.19	-0.04
1.2 Dead+1.0 Wind 180 deg+1.0 Ice+1.0 Temp	45.16	0.00	5.87	439.35	-1.19	-0.02
1.2 Dead+1.0 Wind 210 deg+1.0 Ice+1.0 Temp	45.16	-2.93	5.08	380.30	218.85	0.01
1.2 Dead+1.0 Wind 240 deg+1.0 Ice+1.0 Temp	45.16	-5.08	2.93	219.09	379.95	0.03
1.2 Dead+1.0 Wind 270 deg+1.0 Ice+1.0 Temp	45.16	-5.86	-0.00	-1.09	438.96	0.04
1.2 Dead+1.0 Wind 300 deg+1.0 Ice+1.0 Temp	45.16	-5.08	-2.93	-221.25	380.05	0.05
1.2 Dead+1.0 Wind 330 deg+1.0 Ice+1.0 Temp	45.16	-2.93	-5.08	-382.39	219.02	0.04
Dead+Wind 0 deg - Service	21.36	-0.00	-5.11	-366.70	-0.19	0.02
Dead+Wind 30 deg - Service	21.36	2.55	-4.43	-317.54	-183.25	-0.00
Dead+Wind 60 deg - Service	21.36	4.42	-2.55	-183.37	-317.30	-0.03
Dead+Wind 90 deg - Service	21.36	5.10	0.00	-0.13	-366.40	-0.04
Dead+Wind 120 deg - Service	21.36	4.42	2.56	183.08	-317.41	-0.04
Dead+Wind 150 deg - Service	21.36	2.55	4.43	317.17	-183.46	-0.04
Dead+Wind 180 deg - Service	21.36	0.00	5.11	366.21	-0.42	-0.02
Dead+Wind 210 deg - Service	21.36	-2.55	4.43	317.05	182.64	0.00
Dead+Wind 240 deg - Service	21.36	-4.42	2.55	182.88	316.68	0.03
Dead+Wind 270 deg - Service	21.36	-5.10	-0.00	-0.36	365.79	0.04
Dead+Wind 300 deg - Service	21.36	-4.42	-2.56	-183.57	316.80	0.04
Dead+Wind 330 deg - Service	21.36	-2.55	-4.43	-317.66	182.84	0.04

Solution Summary

	Sum of Applied Forces			Sum of Reactions			
Load Comb.	PX K	PY K	PZ K	PX K	PY K	PZ K	% Error
1	0.00	-21.36	0.00	0.00	21.36	0.00	0.000%
2	-0.00	-25.63	-19.59	0.00	25.63	19.59	0.000%
3	-0.00	-19.22	-19.59	0.00	19.22	19.59	0.000%
4	9.78	-25.63	-16.96	-9.78	25.63	16.96	0.000%
5	9.78	-19.22	-16.96	-9.78	19.22	16.96	0.000%
6	16.94	-25.63	-9.79	-16.94	25.63	9.79	0.000%
7	16.94	-19.22	-9.79	-16.94	19.22	9.79	0.000%
8	19.56	-25.63	0.00	-19.56	25.63	-0.00	0.000%
9	19.56	-19.22	0.00	-19.56	19.22	-0.00	0.000%
10	16.94	-25.63	9.80	-16.94	25.63	-9.80	0.000%

Load Comb.	Sum of Applied Forces PX K	PY K	PZ K	Sum of Reactions PX K	PY K	PZ K	% Error
11	16.94	-19.22	9.80	-16.94	19.22	-9.80	0.000%
12	9.78	-25.63	16.97	-9.78	25.63	-16.97	0.000%
13	9.78	-19.22	16.97	-9.78	19.22	-16.97	0.000%
14	0.00	-25.63	19.59	-0.00	25.63	-19.59	0.000%
15	0.00	-19.22	19.59	-0.00	19.22	-19.59	0.000%
16	-9.78	-25.63	16.96	9.78	25.63	-16.96	0.000%
17	-9.78	-19.22	16.96	9.78	19.22	-16.96	0.000%
18	-16.94	-25.63	9.79	16.94	25.63	-9.79	0.000%
19	-16.94	-19.22	9.79	16.94	19.22	-9.79	0.000%
20	-19.56	-25.63	-0.00	19.56	25.63	0.00	0.000%
21	-19.56	-19.22	-0.00	19.56	19.22	0.00	0.000%
22	-16.94	-25.63	-9.80	16.94	25.63	9.80	0.000%
23	-16.94	-19.22	-9.80	16.94	19.22	9.80	0.000%
24	-9.78	-25.63	-16.97	9.78	25.63	16.97	0.000%
25	-9.78	-19.22	-16.97	9.78	19.22	16.97	0.000%
26	0.00	-45.16	0.00	0.00	45.16	0.00	0.000%
27	-0.00	-45.16	-5.87	0.00	45.16	5.87	0.000%
28	2.93	-45.16	-5.08	-2.93	45.16	5.08	0.000%
29	5.08	-45.16	-2.93	-5.08	45.16	2.93	0.000%
30	5.86	-45.16	0.00	-5.86	45.16	-0.00	0.000%
31	5.08	-45.16	2.93	-5.08	45.16	-2.93	0.000%
32	2.93	-45.16	5.08	-2.93	45.16	-5.08	0.000%
33	0.00	-45.16	5.87	-0.00	45.16	-5.87	0.000%
34	-2.93	-45.16	5.08	2.93	45.16	-5.08	0.000%
35	-5.08	-45.16	2.93	5.08	45.16	-2.93	0.000%
36	-5.86	-45.16	-0.00	5.86	45.16	0.00	0.000%
37	-5.08	-45.16	-2.93	5.08	45.16	2.93	0.000%
38	-2.93	-45.16	-5.08	2.93	45.16	5.08	0.000%
39	-0.00	-21.36	-5.11	0.00	21.36	5.11	0.000%
40	2.55	-21.36	-4.43	-2.55	21.36	4.43	0.000%
41	4.42	-21.36	-2.55	-4.42	21.36	2.55	0.000%
42	5.10	-21.36	0.00	-5.10	21.36	-0.00	0.000%
43	4.42	-21.36	2.56	-4.42	21.36	-2.56	0.000%
44	2.55	-21.36	4.43	-2.55	21.36	-4.43	0.000%
45	0.00	-21.36	5.11	-0.00	21.36	-5.11	0.000%
46	-2.55	-21.36	4.43	2.55	21.36	-4.43	0.000%
47	-4.42	-21.36	2.55	4.42	21.36	-2.55	0.000%
48	-5.10	-21.36	-0.00	5.10	21.36	0.00	0.000%
49	-4.42	-21.36	-2.56	4.42	21.36	2.56	0.000%
50	-2.55	-21.36	-4.43	2.55	21.36	4.43	0.000%

Non-Linear Convergence Results

Load Combination	Converged?	Number of Cycles	Displacement Tolerance	Force Tolerance
1	Yes	4	0.00000001	0.00000001
2	Yes	4	0.00000001	0.00014331
3	Yes	4	0.00000001	0.00007018
4	Yes	5	0.00000001	0.00044247
5	Yes	5	0.00000001	0.00019773
6	Yes	5	0.00000001	0.00044105
7	Yes	5	0.00000001	0.00019706
8	Yes	4	0.00000001	0.00011801
9	Yes	4	0.00000001	0.00004873
10	Yes	5	0.00000001	0.00043978
11	Yes	5	0.00000001	0.00019643
12	Yes	5	0.00000001	0.00044411
13	Yes	5	0.00000001	0.00019850
14	Yes	4	0.00000001	0.00015881
15	Yes	4	0.00000001	0.00008221
16	Yes	5	0.00000001	0.00043879
17	Yes	5	0.00000001	0.00019612
18	Yes	5	0.00000001	0.00044048
19	Yes	5	0.00000001	0.00019694
20	Yes	4	0.00000001	0.00012709

21	Yes	4	0.00000001	0.00005697
22	Yes	5	0.00000001	0.00044364
23	Yes	5	0.00000001	0.00019832
24	Yes	5	0.00000001	0.00043903
25	Yes	5	0.00000001	0.00019609
26	Yes	4	0.00000001	0.00000001
27	Yes	5	0.00000001	0.00019337
28	Yes	5	0.00000001	0.00028259
29	Yes	5	0.00000001	0.00028235
30	Yes	5	0.00000001	0.00019334
31	Yes	5	0.00000001	0.00028019
32	Yes	5	0.00000001	0.00028144
33	Yes	5	0.00000001	0.00019232
34	Yes	5	0.00000001	0.00027814
35	Yes	5	0.00000001	0.00027834
36	Yes	5	0.00000001	0.00019221
37	Yes	5	0.00000001	0.00028108
38	Yes	5	0.00000001	0.00027987
39	Yes	4	0.00000001	0.00001917
40	Yes	4	0.00000001	0.00024424
41	Yes	4	0.00000001	0.00024163
42	Yes	4	0.00000001	0.00001796
43	Yes	4	0.00000001	0.00023854
44	Yes	4	0.00000001	0.00024599
45	Yes	4	0.00000001	0.00001933
46	Yes	4	0.00000001	0.00023783
47	Yes	4	0.00000001	0.00024043
48	Yes	4	0.00000001	0.00001802
49	Yes	4	0.00000001	0.00024491
50	Yes	4	0.00000001	0.00023747

Maximum Tower Deflections - Service Wind

Section No.	Elevation ft	Horz. Deflection in	Gov. Load Comb.	Tilt °	Twist °
L1	100.5 - 80	13.023	39	1.1401	0.0005
L2	83.25 - 44.42	9.075	39	1.0215	0.0003
L3	48.75 - 1.75	3.080	39	0.5911	0.0001
L4	1.75 - 0	0.004	39	0.0208	0.0000

Critical Deflections and Radius of Curvature - Service Wind

Elevation ft	Appurtenance	Gov. Load Comb.	Deflection in	Tilt °	Twist °	Radius of Curvature ft
103.00	DBXNH-8585B-A2M w/ Mount Pipe	39	13.023	1.1401	0.0005	18187
92.00	APXVAALL24_43-U-NA20_TMO w/ Mount Pipe	39	11.035	1.0883	0.0003	10698
83.00	(2) DB844H90E-XY w/ Mount Pipe	39	9.021	1.0192	0.0003	5465
71.00	APXVSPP18-C-A20	39	6.606	0.8894	0.0002	4896
61.00	MX08FRO665-21 w/ Mount Pipe	39	4.862	0.7586	0.0002	4626

Maximum Tower Deflections - Design Wind

Section No.	Elevation ft	Horz. Deflection in	Gov. Load Comb.	Tilt °	Twist °

Section No.	Elevation ft	Horz. Deflection in	Gov. Load Comb.	Tilt °	Twist °
L1	100.5 - 80	50.182	2	4.3956	0.0018
L2	83.25 - 44.42	34.971	2	3.9394	0.0011
L3	48.75 - 1.75	11.866	2	2.2785	0.0005
L4	1.75 - 0	0.015	2	0.0803	0.0000

Critical Deflections and Radius of Curvature - Design Wind

Elevation ft	Appurtenance	Gov. Load Comb.	Deflection in	Tilt °	Twist °	Radius of Curvature ft
103.00	DBXNH-8585B-A2M w/ Mount Pipe	2	50.182	4.3956	0.0018	4771
92.00	APXVAALL24_43-U-NA20_TMO w/ Mount Pipe	2	42.525	4.1965	0.0013	2806
83.00	(2) DB844H90E-XY w/ Mount Pipe	2	34.764	3.9308	0.0011	1432
71.00	APXVSPP18-C-A20	2	25.457	3.4299	0.0009	1279
61.00	MX08FRO665-21 w/ Mount Pipe	2	18.734	2.9251	0.0007	1206

Compression Checks

Pole Design Data

Section No.	Elevation ft	Size	L ft	L_u ft	Kl/r	A in^2	P_u K	ϕP_n K	Ratio $\frac{P_u}{\phi P_n}$
L1	100.5 - 80 (1)	TP22.25x17x0.1875	20.50	0.00	0.0	12.8177	-5.46	749.84	0.007
L2	80 - 44.42 (2)	TP30.77x21.0427x0.25	38.83	0.00	0.0	23.6954	-15.86	1386.18	0.011
L3	44.42 - 1.75 (3)	TP41x29.1853x0.3125	47.00	0.00	0.0	40.9418	-25.23	2395.10	0.011
L4	1.75 - 0 (4)	TP41x41x0.3125	1.75	0.00	0.0	40.9418	-25.62	2395.10	0.011

Pole Bending Design Data

Section No.	Elevation ft	Size	M_{ux} kip-ft	ϕM_{nx} kip-ft	Ratio $\frac{M_{ux}}{\phi M_{nx}}$	M_{uy} kip-ft	ϕM_{ny} kip-ft	Ratio $\frac{M_{uy}}{\phi M_{ny}}$
L1	100.5 - 80 (1)	TP22.25x17x0.1875	109.65	362.85	0.302	0.00	362.85	0.000
L2	80 - 44.42 (2)	TP30.77x21.0427x0.25	542.64	913.47	0.594	0.00	913.47	0.000
L3	44.42 - 1.75 (3)	TP41x29.1853x0.3125	1377.70	2072.18	0.665	0.00	2072.18	0.000
L4	1.75 - 0 (4)	TP41x41x0.3125	1411.87	2072.18	0.681	0.00	2072.18	0.000

Pole Shear Design Data

Section No.	Elevation ft	Size	Actual V_u K	ϕV_n K	Ratio $\frac{V_u}{\phi V_n}$	Actual T_u kip-ft	ϕT_n kip-ft	Ratio $\frac{T_u}{\phi T_n}$
L1	100.5 - 80 (1)	TP22.25x17x0.1875	7.46	224.95	0.033	0.00	420.09	0.000
L2	80 - 44.42 (2)	TP30.77x21.0427x0.25	15.98	415.85	0.038	0.13	1076.73	0.000
L3	44.42 - 1.75 (3)	TP41x29.1853x0.3125	19.48	718.53	0.027	0.07	2571.61	0.000
L4	1.75 - 0 (4)	TP41x41x0.3125	19.61	718.53	0.027	0.07	2571.61	0.000

Pole Interaction Design Data

Section No.	Elevation ft	Ratio $\frac{P_u}{\phi P_n}$	Ratio $\frac{M_{ux}}{\phi M_{nx}}$	Ratio $\frac{M_{uy}}{\phi M_{ny}}$	Ratio $\frac{V_u}{\phi V_n}$	Ratio $\frac{T_u}{\phi T_n}$	Comb. Stress Ratio	Allow. Stress Ratio	Criteria
L1	100.5 - 80 (1)	0.007	0.302	0.000	0.033	0.000	0.311	1.050	4.8.2
L2	80 - 44.42 (2)	0.011	0.594	0.000	0.038	0.000	0.607	1.050	4.8.2
L3	44.42 - 1.75 (3)	0.011	0.665	0.000	0.027	0.000	0.676	1.050	4.8.2
L4	1.75 - 0 (4)	0.011	0.681	0.000	0.027	0.000	0.693	1.050	4.8.2

Section Capacity Table

Section No.	Elevation ft	Component Type	Size	Critical Element	P K	ϕP_{allow} K	% Capacity	Pass Fail
L1	100.5 - 80	Pole	TP22.25x17x0.1875	1	-5.46	787.33	29.6	Pass
L2	80 - 44.42	Pole	TP30.77x21.0427x0.25	2	-15.86	1455.49	57.8	Pass
L3	44.42 - 1.75	Pole	TP41x29.1853x0.3125	3	-25.23	2514.85	64.4	Pass
L4	1.75 - 0	Pole	TP41x41x0.3125	4	-25.62	2514.85	66.0	Pass
							Summary	
						Pole (L4)	66.0	Pass
						RATING =	**66.0**	**Pass**

APPENDIX B

BASE LEVEL DRAWING

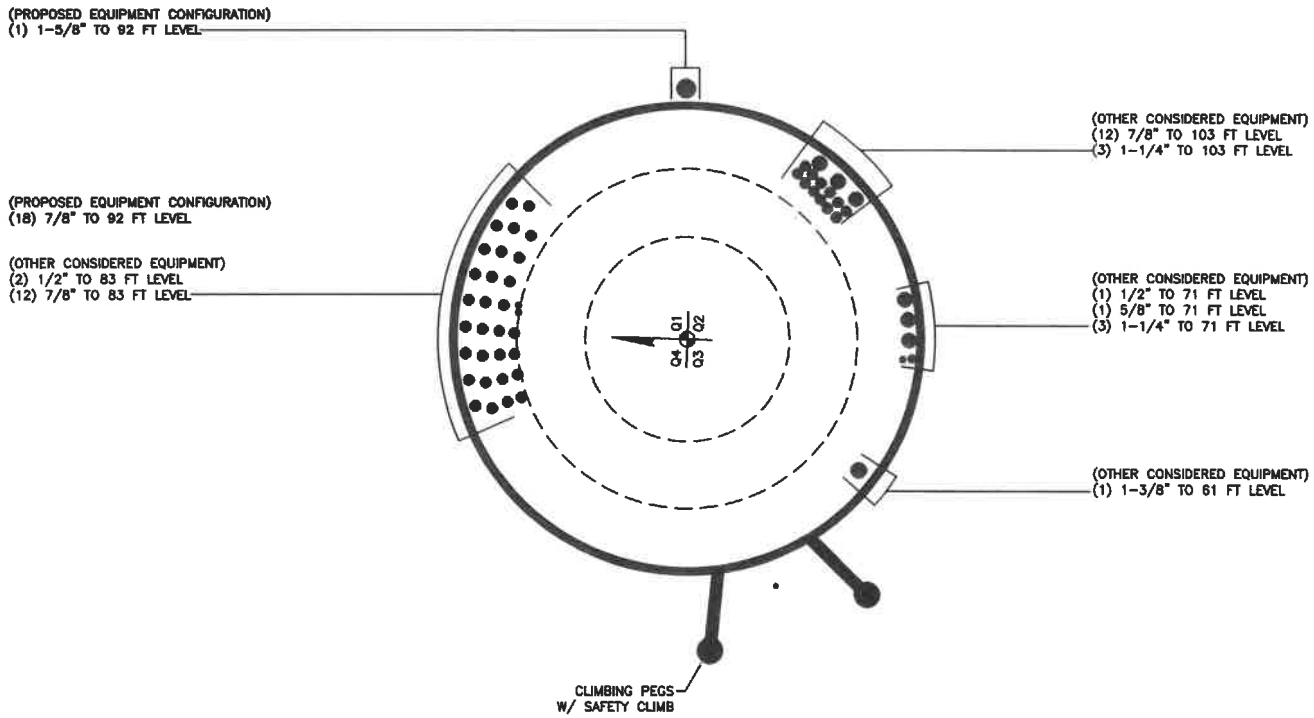
(PROPOSED EQUIPMENT CONFIGURATION)
(1) 1-5/8" TO 92 FT LEVEL
(PROPOSED EQUIPMENT CONFIGURATION)
(18) 7/8" TO 92 FT LEVEL
(OTHER CONSIDERED EQUIPMENT)
(2) 1/2" TO 83 FT LEVEL
(12) 7/8" TO 83 FT LEVEL
(OTHER CONSIDERED EQUIPMENT)
(12) 7/8" TO 103 FT LEVEL
(3) 1-1/4" TO 103 FT LEVEL
(OTHER CONSIDERED EQUIPMENT)
(1) 1/2" TO 71 FT LEVEL
(1) 5/8" TO 71 FT LEVEL
(3) 1-1/4" TO 71 FT LEVEL
(OTHER CONSIDERED EQUIPMENT)
(1) 1-3/8" TO 61 FT LEVEL
Q1
Q2
Q3
Q4
CLIMBING PEGS
W/ SAFETY CLIMB

APPENDIX C

ADDITIONAL CALCULATIONS

Monopole Flange Plate Connection

Elevation = 1.75 ft.

CROWN CASTLE

BU #	806949
Site Name	NY SOMERS 958150
Order #	557308 Rev. 0

TIA-222 Revision	H

Applied Loads	
Moment (kip-ft)	1377.70
Axial Force (kips)	25.23
Shear Force (kips)	19.48

**TIA-222-H Section 15.5 Applied*

Top Plate - External

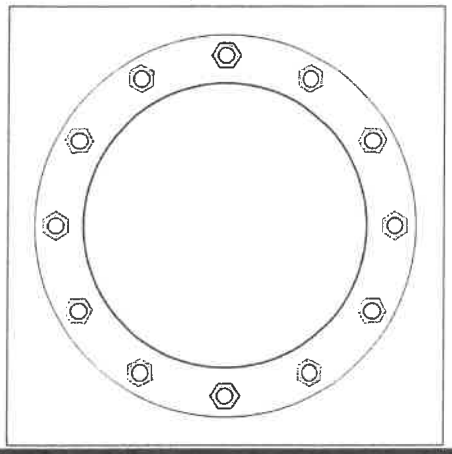

Bottom Plate - External

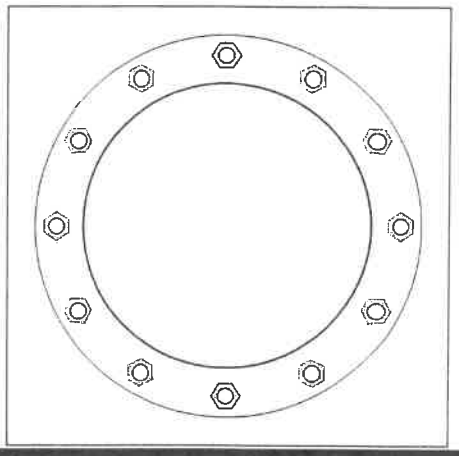

Connection Properties

Bolt Data

(12) 2-1/4" ø bolts (A193 Gr. B7 N; Fy=105 ksi, Fu=125 ksi) on 49" BC

Top Plate Data

55" OD x 1.75" Plate (A572-60; Fy=60 ksi, Fu=75 ksi)

Bottom Plate Data

55" OD x 1.75" Plate (A572-60; Fy=60 ksi, Fu=75 ksi)

Top Stiffener Data

N/A

Bottom Stiffener Data

N/A

Top Pole Data

41" x 0.3125" 12-sided pole (A572-65; Fy=65 ksi, Fu=80 ksi)

Bottom Pole Data

41" x 0.3125" 12-sided pole (A572-65; Fy=65 ksi, Fu=80 ksi)

Analysis Results

Bolt Capacity

Max Load (kips)	110.27	
Allowable (kips)	304.68	
Stress Rating:	**34.5%**	Pass

Top Plate Capacity

Max Stress (ksi):	34.09	(Flexural)
Allowable Stress (ksi):	54.00	
Stress Rating:	**60.1%**	Pass
Tension Side Stress Rating:	**30.5%**	Pass

Bottom Plate Capacity

Max Stress (ksi):	34.09	(Flexural)
Allowable Stress (ksi):	54.00	
Stress Rating:	**60.1%**	Pass
Tension Side Stress Rating:	**30.5%**	Pass

Monopole Base Plate Connection

CROWN CASTLE

Site Info	
BU #	806949
Site Name	NY SOMERS 958150
Order #	557308 Rev. 0

Analysis Considerations	
TIA-222 Revision	H
Grout Considered:	No
l_{ar} (in)	1.25

Applied Loads	
Moment (kip-ft)	1411.87
Axial Force (kips)	25.62
Shear Force (kips)	19.61

**TIA-222-H Section 15.5 Applied*

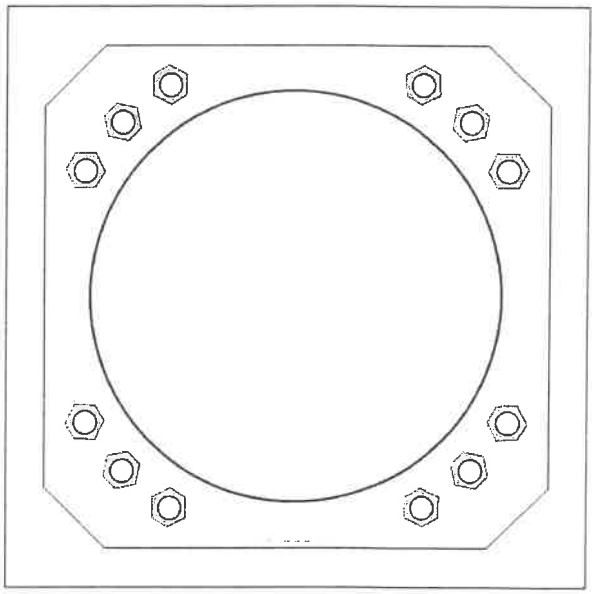

Connection Properties

Anchor Rod Data

(12) 2-1/4" ø bolts (A615-75 N; Fy=75 ksi, Fu=100 ksi) on 49" BC

Anchor Spacing: 6 in

Base Plate Data

50" W x 2.25" Plate (A572-60; Fy=60 ksi, Fu=75 ksi); Clip: 6 in

Stiffener Data

N/A

Pole Data

41" x 0.3125" 12-sided pole (A572-65; Fy=65 ksi, Fu=80 ksi)

Analysis Results

Anchor Rod Summary *(units of kips, kip-in)*

Pu_t = 113.02	ϕPn_t = 243.75	**Stress Rating**
Vu = 1.63	ϕVn = 149.1	**44.2%**
Mu = n/a	ϕMn = n/a	**Pass**

Base Plate Summary

Max Stress (ksi):	32.25	(Flexural)
Allowable Stress (ksi):	54	
Stress Rating:	**56.9%**	**Pass**

Pier and Pad Foundation

BU # :	806949
Site Name:	NY SOMERS 9581
App. Number:	557308 Rev. 0

TIA-222 Revision:	H
Tower Type:	Monopole

Top & Bot. Pad Rein. Different?:	☐
Block Foundation?:	☐
Rectangular Pad?:	☐

Superstructure Analysis Reactions		
Compression, P_{comp}:	25.63	kips
Base Shear, Vu_comp:	19.59	kips
Moment, M_u:	1411.87	ft-kips
Tower Height, **H**:	100.5	ft
BP Dist. Above Fdn, bp_{dist}:	3.5	in

Foundation Analysis Checks	Capacity	Demand	Rating*	Check
Lateral (Sliding) (kips)	308.58	19.59	**6.0%**	**Pass**
Bearing Pressure (ksf)	22.50	4.90	**21.8%**	**Pass**
*Overturning (kip*ft)*	2711.95	1613.48	**59.5%**	**Pass**
*Pier Flexure (Comp.) (kip*ft)*	2329.73	1519.62	**62.1%**	**Pass**
Pier Compression (kip)	18081.70	53.75	**0.3%**	**Pass**
*Pad Flexure (kip*ft)*	4149.00	565.81	**13.0%**	**Pass**
Pad Shear - 1-way (kips)	901.63	60.04	**6.3%**	**Pass**
Pad Shear - 2-way (Comp) (ksi)	0.190	0.000	**0.0%**	**Pass**
*Flexural 2-way (Comp) (kip*ft)*	8298.00	911.77	**10.5%**	**Pass**

**Rating per TIA-222-H Section 15.5*

Structural Rating*:	**62.1%**
Soil Rating*:	**59.5%**

Pier Properties		
Pier Shape:	Square	
Pier Diameter, **dpier**:	5.33	ft
Ext. Above Grade, **E**:	1	ft
Pier Rebar Size, **Sc**:	8	
Pier Rebar Quantity, **mc**:	24	
Pier Tie/Spiral Size, **St**:	4	
Pier Tie/Spiral Quantity, **mt**:	4	
Pier Reinforcement Type:	Tie	
Pier Clear Cover, cc_{pier}:	3	in

Pad Properties		
Depth, **D**:	9	ft
Pad Width, W_1:	16	ft
Pad Thickness, **T**:	4.5	ft
Pad Rebar Size (Bottom dir. 2), Sp_2:	8	
Pad Rebar Quantity (Bottom dir. 2), mp_2:	24	
Pad Clear Cover, cc_{pad}:	3	in

Material Properties		
Rebar Grade, **Fy**:	60	ksi
Concrete Compressive Strength, **F'c**:	4	ksi
Dry Concrete Density, δc:	150	pcf

Soil Properties		
Total Soil Unit Weight, γ:	130	pcf
Ultimate Gross Bearing, Qult:	30.000	ksf
Cohesion, **Cu**:	0.000	ksf
Friction Angle, φ:	38	degrees
SPT Blow Count, N_{blows}:		
Base Friction, μ:	0.45	
Neglected Depth, **N**:	4.20	ft
Foundation Bearing on Rock?	Yes	
Groundwater Depth, **gw**:	N/A	ft

ASCE 7 Hazards Report

Address:
No Address at This Location

Standard: ASCE/SEI 7-16
Risk Category: II
Soil Class: D - Default (see Section 11.4.3)

Elevation: 435.62 ft (NAVD 88)
Latitude: 41.3105
Longitude: -73.685139

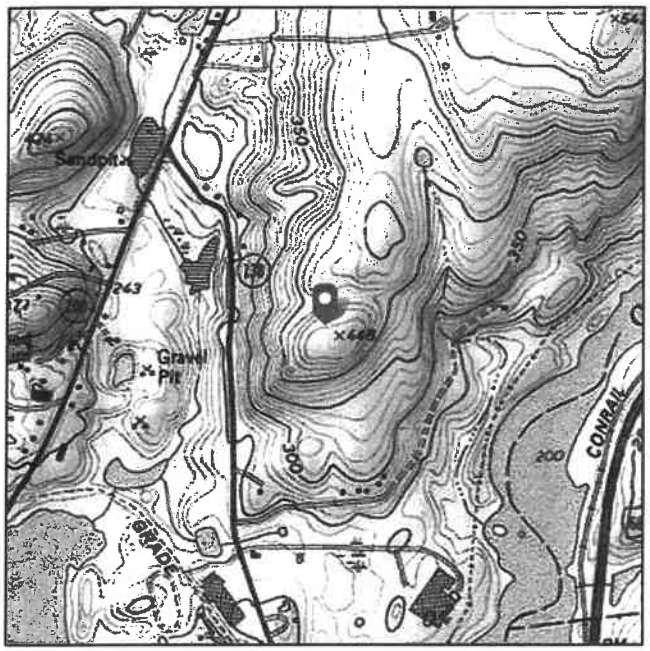

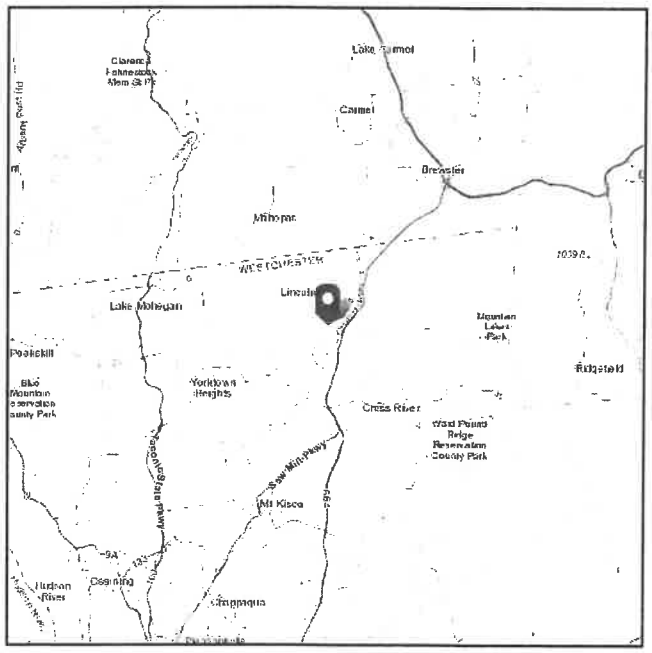

Wind

Results:

Wind Speed:	114 Vmph
10-year MRI	75 Vmph
25-year MRI	84 Vmph
50-year MRI	89 Vmph
100-year MRI	95 Vmph

Data Source:	ASCE/SEI 7-16, Fig. 26.5-1B and Figs. CC.2-1–CC.2-4, and Section 26.5.2
Date Accessed:	Sat May 15 2021

Value provided is 3-second gust wind speeds at 33 ft above ground for Exposure C Category, based on linear interpolation between contours. Wind speeds are interpolated in accordance with the 7-16 Standard. Wind speeds correspond to approximately a 7% probability of exceedance in 50 years (annual exceedance probability = 0.00143, MRI = 700 years).

Site is not in a hurricane-prone region as defined in ASCE/SEI 7-16 Section 26.2.

ASCE
AMERICAN SOCIETY OF CIVIL ENGINEERS

Seismic

Site Soil Class: D - Default (see Section 11.4.3)

Results:

S_S :	0.264	S_{D1} :	0.095
S_1 :	0.059	T_L :	6
F_a :	1.588	PGA :	0.159
F_v :	2.4	PGA_M :	0.236
S_{MS} :	0.42	F_{PGA} :	1.482
S_{M1} :	0.142	I_e :	1
S_{DS} :	0.28	C_v :	0.829

Seismic Design Category B

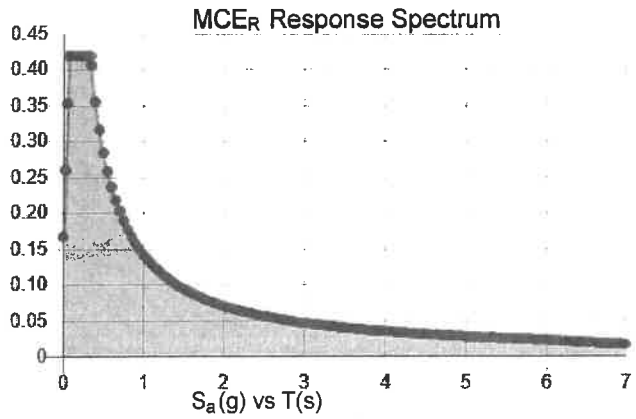

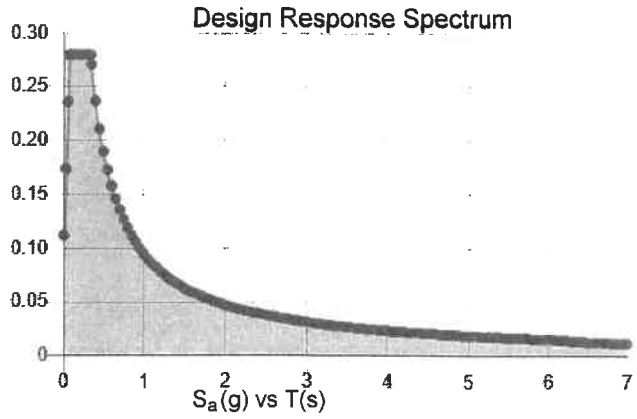

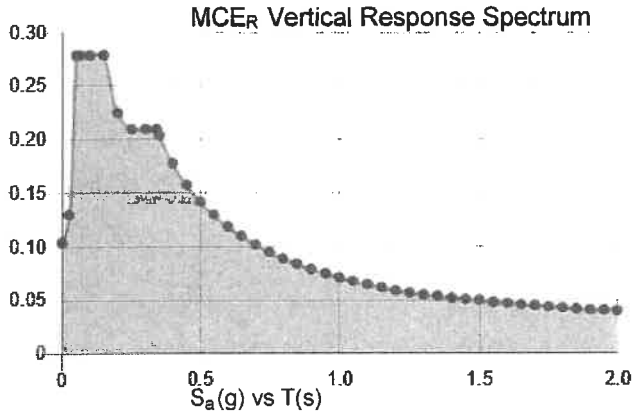

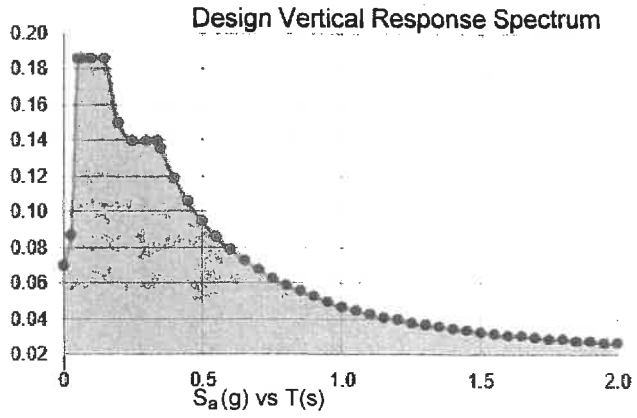

Data Accessed: Sat May 15 2021

Date Source: USGS Seismic Design Maps based on ASCE/SEI 7-16 and ASCE/SEI 7-16 Table 1.5-2. Additional data for site-specific ground motion procedures in accordance with ASCE/SEI 7-16 Ch. 21 are available from USGS.

AMERICAN SOCIETY OF CIVIL ENGINEERS

Ice

Results:

Ice Thickness:	1.00 in.
Concurrent Temperature:	15 F
Gust Speed:	50 mph
Data Source:	Standard ASCE/SEI 7-16, Figs. 10-2 through 10-8
Date Accessed:	Sat May 15 2021

Ice thicknesses on structures in exposed locations at elevations higher than the surrounding terrain and in valleys and gorges may exceed the mapped values.

Values provided are equivalent radial ice thicknesses due to freezing rain with concurrent 3-second gust speeds, for a 500-year mean recurrence interval, and temperatures concurrent with ice thicknesses due to freezing rain. Thicknesses for ice accretions caused by other sources shall be obtained from local meteorological studies. Ice thicknesses in exposed locations at elevations higher than the surrounding terrain and in valleys and gorges may exceed the mapped values.

COMMITMENT & INTEGRITY DRIVE RESULTS

Woodard & Curran Engineering and Geological Services P.A.P.C.
800 Westchester Avenue | Suite N507
Rye Brook, New York 10573
www.woodardcurran.com

T 800.807.4080
T 914.448.2266
F 914.448.0147

MEMORANDUM

TO: Town of Somers Planning Board
CC: Wendy Getting, Town of Somers
David Smith, Consulting Town Planner
FROM: Jennifer L. Martinez Torres, P.E., on behalf of Steven C. Robbins, P.E., LEED AP
DATE: December 2, 2021
RE: 2 Amawalk Point Road, 2-Lot Subdivision
Preliminary Subdivision Plat Approval, Stormwater Management and Erosion Control Application, Tree Removal Permit Application, and Steep Slope Protection Application
TM: 36.12-2-6, R-80

GENERAL

The purpose of this memorandum is to provide the Planning Board with a summary of our comments related to our review of the applications submitted for the proposed two lot subdivision located at 2 Amawalk Point Road in Somers, New York.

The applicant proposes a two-lot subdivision and the development of a new residence on Lot #2 to be served by private well and by septic system. Based on the application documents, it appears that the proposed residence and improvements for Lot #1 are currently in construction. The project site is located within the East of Hudson watershed and appears to involve disturbance of steep slopes. Based on the provided drawing set, total project disturbance to Lot #2 is estimated to be over 1 acre (1.16 acres) which triggers the need for coverage under the NYSDEC SPDES General Permit (GP-0-20-001).

This review focused on the engineering design and the associated Town Code requirements in accordance with the following:

- Town of Somers Code, Chapter 93: *Stormwater Management and Erosion and Sediment Control*, and other sections, as applicable.
- *New York State Standards and Specifications for Erosion and Sediment Control*, dated November 2016.
- *New York State Department of Environmental Conservation's (NYSDEC's) Stormwater Management Design Manual (SMDM)*, dated January 2015.

DOCUMENTS RECEIVED

- Application, *"Somers Planning Board, Application for Preliminary Approval of Subdivision"*, signed October 29, 2021
- Letter, *"RE: Mastrantoni Brothers Inc., 2 Amawalk Point Road, Parcel #36.12-2-6,"* prepared by Michele McKearney, dated July 7, 2021.

- Form, *"Affidavit to be Completed by Corporation Owner,"* dated July 6, 2021.
- Form, *"Applicant Acknowledgement,"* dated October 29, 2021.
- Form, *Town of Somers, Westchester County, New York, Chapter 67 "Application Processing Restrictive Law,"* signed October 29, 2021.
- Application, *"Town of Somers, Westchester County, New York, Application for Environmental Permit, Chapter 93 "Stormwater Management and Erosion and Sediment Control"*, signed October 29, 2021.
- Application, *"Town of Somers, Westchester County, New York, Application for Environmental Permit, Chapter 148 'Steep Slope Protection'"*, signed October 29, 2021.
- SWPPP, *"Stormwater Pollution Prevention Plan for 2 Amawalk Point, 2 Lot Subdivision, T.M. 36.12-2-6, prepared for Mastrantoni Brothers, Inc., 10 Boxwood Drive, Mahopac, NY 10541,"* prepared by Putnam Engineering, PLLC, dated July 2021.
- Drawing Sheet, *"Mastrantoni Brothers, Inc., 2 Amawalk Point Road, Town of Somers, Westchester County, New York*, prepared by Putnam Engineering, PLLC:

Sheet Number	Sheet Name	Dated
S-1	Preliminary Subdivision Plan	11/01/21
S-2	Grading Plan	11/01/21
S-3	Soils Map	11/01/21
S-4	Steep Slopes Map	11/01/21
S-5	Steep Slopes with Improvement and Grading Plan	11/01/21

PERMITS AND APPROVALS REQUIRED

- Town of Somers Planning Board: Preliminary Subdivision Plat Approval
- Town of Somers Planning Board: Final Subdivision Plat Approval
- Town of Somers Planning Board: Stormwater Management and Erosion and Sediment Control Permit (Chapter 93)
- Town of Somers, Application for Environmental Permit, Chapter 148 "Steep Slope Protection"
- Town of Somers, Tree Removal Permit
- New York State Department of Environmental Protection, SPDES General Permit Coverage (GP-0-20-001)
- Westchester County Department of Health (WCDOH): Approval of Sanitary Sewer Systems
- WCDOH: Realty Subdivision Approval

DISCUSSION

The following is a summary of our comments. Please note further comments will be provided upon review of additional information.

1. Since the project is in the East of Hudson Watershed and the proposed disturbance of Lot #2 is approximately 1.16 acres, the Applicant is subject to the requirements of Chapter 93 of the Somers Code and shall obtain coverage under the SPDES General Permit (GP-0-20-001). Based on the disturbance over 1 acre, the Applicant is required to prepare a full Stormwater Pollution Prevention Plan (SWPPP) which includes post-construction stormwater management controls.

    a. The Applicant shall revise the provided SWPPP to include post-construction stormwater controls (flow attenuation and stormwater treatment) per the NYSDEC Stormwater Management Design Manual (SMDM). Since the project is located in the East of Hudson Watershed, the post-construction stormwater controls shall be designed to addresse enhanced phosphorus controls in Chapter 10 of the design manual.

    b. The Applicant shall provide maintenance and inspection requirements for all proposed temporary and permanent erosion and sediment controls per the NYS Standards and Specifications for Erosion and Sediment Controls, latest version dated November 2016.

    c. The Applicant shall provide maintenance and inspection required for all proposed drainage infrastructure.

    d. The Applicant shall provide a maintenance agreement for review and approval by the Consulting Town Engineer and Town Attorney.

    e. The Applicant shall provide a Contractor Certification Statement.

2. The Applicant shall provide a draft Notice of Intent and MS4 SWPPP Acceptance Form to obtain coverage under NYSDEC General SPDES Permit (GP-0-20-001) for review and acceptance by the Consulting Town Engineer.

3. The Applicant noted on the application forms that infiltrators will be used to "infiltrate the 2-year storm for impervious areas." Below are comments related to the proposed infiltrators:

    a. The Applicant shall provide design calculations for the proposed infiltrators per the NYSDEC SMDM.

    b. The Applicant shall provide the location of all proposed infiltrators on the plans and shall provide a construction detail for the infiltrators.

    c. The Applicant shall provide signed and sealed infiltration tests and deep hole tests results per Appendix D in the NYSDEC SMDM. All testing locations shall be provided on the plans.

    d. The Applicant shall ensure that a minimum infiltration rate of 0.50 in/hr is met at the proposed infiltration locations and shall provide at least 3 feet of separation between the bottom of the infiltration system and bedrock/groundwater.

e. The Applicant shall provide maintenance and inspection requirements for the proposed infiltrators.

f. The Applicant shall provide pretreatment to the infiltrators per the NYSDEC SMDM. Note that the volume required to be pretreated is based on the field-tested infiltration rate.

g. The Applicant shall provide rim elevation and invert elevation data for all proposed infiltrators. The Applicant shall also clarify the overflow mechanism for the proposed infiltrators.

4. The Applicant shall provide an Erosion and Sediment Control Plan with associated construction details and notes to support the information provided in the SWPPP. The following erosion and sediment controls shall also be added to the SWPPP and on the required plan:

   a. Soil stockpile area

   b. Concrete washout area

   c. Construction safety fence

   d. Tree protection (note which trees are proposed to be protected on the plan)

5. The Applicant shall show the intended location of the equipment staging area on the plans.

6. It appears that some steep slopes will be disturbed during construction. The Applicant shall indicate if any erosion control matting is proposed to be used. The Applicant shall provide the proposed locations for any erosion control matting and shall also provide a construction detail.

7. The Applicant noted on the application documents that trees will need to be removed to develop Lot #2. The Applicant shall provide a Tree Removal Permit to the Town for approval and shall note on the plans how many trees are proposed to be removed.

8. The Applicant shall indicate the proposed sizing and material for the drainage swales shown on the plans.

9. The Applicant indicated that the depression shown on the plans will be used as a sediment trap and then will be used as a detention pond. The Applicant shall provide the proposed sizing for that basin and shall indicate how it will be used as part of the stormwater management system.

   a. The Applicant shall demonstrate that the temporary sediment trap is sized to provide storage for the contributing drainage area per the design criteria in the New York State Standards and Specifications for Erosion and Sediment Control. Temporary sediment traps are required to store 3,600 cubic feet per acre.

   b. It appears that the side slopes are set to 2H:1V which would make maintaining the basin difficult. The Applicant shall revise the side slopes to be no steeper than 3H:1V.

   c. The Applicant shall indicate how the proposed basin will be discharged.

10. The Applicant shall provide top of wall and bottom of wall elevations for all proposed walls.
    a. The Applicant shall provide engineering design calculations and construction drawings for all retaining walls greater than four feet in height that are signed and sealed by a professional engineer licensed in the State of New York.
    b. The drawings shall include a note that all constructed retaining walls shall be inspected by a licensed professional engineer at the completion of construction to certify conformance with the final wall design. Post construction certification shall be provided to the Town prior to issuance of a certificate of occupancy.
11. The Applicant shall include a note on the plans stating that the Design Professional shall certify the as-built installation of subsurface stormwater structures to the Engineering Department prior to issuance of certificate of occupancy.
12. The Applicant shall provide a cut/fill table on the plans.
13. The Applicant shall provide a complete drawing set with an existing conditions plan (based on Link Land Surveyors survey), a utilities plan, construction details for all proposed improvements, construction notes, etc. All drawings shall be signed and sealed by a Professional Engineer licensed in the State of New York.
14. The Applicant shall include a note on the plans which states "All E&SC measures shall be installed and maintained per New York State Standards and Specifications for Erosion and Sediment Control, dated November 2016".
15. The Applicant shall include a note in the plans which states: "Any imported topsoil shall comply with all federal, state, and local requirements for quality and use".
16. The Applicant shall include a note on the plans which states: "Off-site disposal of excess cut shall be in accordance with all federal, state, and local requirements".
17. The Applicant shall add a note to the plan that states: "Site stabilization (80% uniform density of permanent vegetation or permanent mulch/stone) must be achieved prior to removing temporary erosion control measures".
18. The Applicant shall provide copies of all required WCDOH approvals once obtained.

Please feel free to contact our office with any questions or concerns.

Sincerely,

Jennifer L. Martinez Torres, P.E.
Assistant Consulting Town Engineer

On behalf of,

Steven C. Robbins, P.E., LEED AP
Consulting Town Engineer

COMMITMENT & INTEGRITY DRIVE RESULTS

Woodard & Curran Engineering and Geological Services P.A.P.C.
800 Westchester Avenue | Suite N507
Rye Brook, New York 10573
www.woodardcurran.com

T 800.807.4080
T 914.448.2266
F 914.448.0147

MEMORANDUM

TO: Town of Somers Planning Board
CC: Wendy Getting, Town of Somers
David Smith, Consulting Town Planner
FROM: Jennifer L. Martinez Torres, P.E., on behalf of Steven C. Robbins, P.E., LEED AP
DATE: December 2, 2021
RE: Somers National Golf Club
Site Plan Application, Stormwater Management and Erosion Control Application, Tree Removal Permit Application, Steep Slope Protection Application
TM: 6.17-20-1.21, 6.18-20-1.22, and 6.13-20-1.2.3, Designed Residential Development Overlay District (DRD)

GENERAL

The purpose of this memorandum is to provide the Planning Board with a summary of our comments related to our review of the applications that were submitted for the Somers National Golf Club located at 1000 West Hill Drive in Somers, New York.

The application proposes the renovation of an existing cart storage building to create a cigar bar, the installation of four golf simulators, and the construction of an 18-hole mini golf course with associated parking. The project site is located within the East of Hudson watershed and appears to involve disturbance of steep slopes. Based on the provided drawing set, total project disturbance is approximately 1.5 acres which triggers the need for coverage under the NYSDEC SPDES General Permit.

This review focused on the engineering design and the associated Town Code requirements in accordance with the following:

- Town of Somers Code, Chapter 93: *Stormwater Management and Erosion and Sediment Control*, and other sections, as applicable.
- *New York State Standards and Specifications for Erosion and Sediment Control*, dated November 2016.
- *New York State Department of Environmental Conservation's (NYSDEC's) Stormwater Management Design Manual (SMDM)*, dated January 2015.

DOCUMENTS RECEIVED

- Cover Letter, *"RE: Heritage Hills Holdings a.k.a Somers National Golf Club 1000 West Hill Drive"*, prepared by Insite Engineering, Surveying & Landscape Architecture, P.C., dated November 22, 2021.

- SWPPP, *"Stormwater Pollution Prevention Plan for Somers National Golf Club, 1000 West Hill Drive, Town of Somers, New York,"* prepared by Insite Engineering, Surveying & Landscape Architecture, P.C., dated November 22, 2021.
- MS4 Stormwater Pollution Prevention Plan (SWPPP) Acceptance Form
- DRAFT Notice of Intent
- Architectural Renderings, *"Somers National Golf Club, Cover Rendering,"* prepared by Harris Miniature Golf, dated April 12, 2021, last revised October 8, 2021.
- Drawing Sheet, *"Somers National Golf Club, Concept Plan"*, prepared by Insite Engineering, Surveying & Landscape Architecture, P.C., dated September 28, 2021.

Sheet Number	Sheet Name	Dated	Last Revised
OP-1	Overall Plan	09/28/21	11/22/21
EX-1	Existing Conditions & Removals Plan	09/28/21	11/22/21
SP-1	Layout & Landscape Plan	09/28/21	11/22/21
SP-2	Grading & Utilities Plan	09/28/21	11/22/21
SP-3	Erosion & Sediment Control Plan	09/28/21	11/22/21
D-1	Details	09/28/21	11/22/21
D-2	Details	11/22/21	--
D-3	Details	09/28/21	11/22/21

PERMITS AND APPROVALS REQUIRED

- Town of Somers Planning Board: Stormwater Management and Erosion and Sediment Control Permit (Chapter 93)
- Town of Somers Planning Board: Application for Site Plan Approval
- Town of Somers, Application for Environmental Permit, Chapter 148 "Steep Slope Protection"
- Town of Somers, Tree Removal Permit.
- New York State Department of Environmental Protection, SPDES General Permit Coverage (GP-0-20-001)

DISCUSSION

The following is a summary of our comments. New comments are based on our review of the latest submittal. Previously issued comments are noted in *italics* and the corresponding current status and response is shown below in **bold**. It should be noted that further comments may be provided upon review of additional information.

1. *Since the project is in the East of Hudson Watershed and the proposed disturbance is approximately 1.5 acres, the Applicant is subject to the requirements of Chapter 93 of the Somers Code and shall obtain coverage under the SPDES General Permit (GP-0-20-001). Based on the disturbance over 1 acre, the Applicant is required to prepare a full Stormwater*

Pollution Prevention Plan (SWPPP) which includes post-construction stormwater management controls. The following comments are related to submitted SWPPP and stormwater management design:

a. *The Applicant shall provide calculations of the required water demand at the site to demonstrate that 100% RRv capacity can be credited by the proposed rainwater harvesting system.* **Partially Addressed. The Applicant estimated the proposed water demand based on an anticipated irrigation schedule of "3 hours a day, twice a day, every day". According to the NYSDEC SMDM, "[r]unoff reduction credit is applied if the water demand and system sizing is equal to or greater than the WQv." Based on correspondence with the NYSDEC, our office received the guidance that an acceptable watering rate for irrigation is one inch/square foot/week. The Applicant shall indicate in the project documents whether the proposed design meets this guidance.**

b. *The Applicant shall provide information on the proposed cistern pump.* **Partially Addressed. The Applicant indicated that the proposed pump must have minimum output of 40 gallons per minute to dewater the cistern and supply the irrigation system. However, the Applicant shall clarify why 0.14 cfs was used in the HydroCAD analysis for the pump's output.**

c. *The Applicant shall provide additional detail related to the proposed rainwater harvesting system's connection to the existing pond, and an evaluation of the existing pond's capacity as noted in the Preliminary SWPPP.* **Addressed. The Applicant provided a response in their letter stating that the rainwater harvesting system will be connected to the upper end of the irrigation system instead of to the irrigation pond. Valves will be installed on the main irrigation line and the rainwater harvesting line to irrigate the upper end of the golf course. The rainwater harvesting system will be the primary source of irrigation water for that portion of the golf course.**

d. *The Applicant shall provide maintenance and inspection requirements for the rainwater harvesting system.* **Partially Addressed. The Applicant provided some maintenance and inspection requirements for the rainwater harvesting system in Section 5.3 of the revised SWPPP. However, the Applicant shall clarify the following statement: "[d]uring the irrigation system the cistern should between rainstorm events weekly to ensure it is dewatering and the pumps are functioning."**

e. *The Applicant states in the SWPPP that the on-site pipe system will be sized to collect and convey at minimum that 100-year, 24-hour design storm using the Rational Method. The Applicant shall provide these calculations for review.* **Not Addressed. The Applicant indicated that pipe sizing calculations will be provided in the final project SWPPP.**

f. *The Applicant shall delineate the new impervious area on the drainage area maps to be consistent with the RRv minimum calculations (0.73 acres of total new impervious cover).* **Addressed. The Applicant provided a new plan which**

delineates existing and new impervious surfaces. Based on that plan, the proposed new impervious area is 0.80 acres. This value was used in the RRv calculations.

g. *The Applicant shall provide a table of new and existing impervious cover.* **Addressed. The Applicant provided a new plan titled "Proposed New Impervious Areas" and provided the requested table in the SWPPP.**

h. *The Applicant shall confirm that the time of concentration estimates in HydroCAD are consistent with the delineations shown on the drainage maps.* **Addressed.**

i. *The Applicant shall provide sizing calculations for the proposed level spreader.* **Comment no longer applicable. The Applicant is no longer proposing the level spreader. The proposed bypass upstream of the rainwater harvesting system will be directly connected to the existing drainage infrastructure.**

j. *The Applicant shall provide sizing calculations for the proposed swale adjacent to the miniature golf course.* **Not Addressed. The Applicant indicated that sizing calculations for the proposed swale will be provided in the final project SWPPP.**

k. *The Applicant shall provide a construction sequence for the proposed work.* **Partially Addressed. The Applicant shall add a note to the plan that states: "Site stabilization (80% uniform density of permanent vegetation or permanent mulch/stone) must be achieved prior to removing temporary erosion control measures".**

l. *The Applicant shall provide a draft Notice of Intent.* **Partially Addressed. The Applicant shall revise the NOI to indicate how much existing impervious area will be disturbed. Based on the new plan provided, there are overlapped areas of new impervious and existing impervious surfaces which indicate redeveloped portions. These areas shall be captured in the NOI to support a redevelopment project with an increase in impervious areas.**

m. *The Applicant shall provide a MS4 SWPPP Acceptance Form.* **Addressed.**

n. *The Applicant shall provide a Contractor Certification Statement.* **Partially Addressed. The Applicant shall revise the Contractor Certification Statement to be consistent with language provided in the latest SPDES General Permit.**

o. *The Applicant shall provide a maintenance agreement for review and approval by the Consulting Town Engineer and Town Attorney.* **Not Addressed. The Applicant indicated that a maintenance agreement will be provided in the next submission.**

2. *The Applicant shall provide a detail for the proposed retaining walls. The Applicant shall also provide top of wall and bottom of wall elevations.* **Addressed. The Applicant provided a retaining wall detail on the mini golf course plan set. Based on the provided detail, all proposed walls are expected to be 2- to 3-ft tall.**

3. *The Applicant shall provide a detail for the proposed walkway within the miniature golf course.* **Addressed.**
4. *The Applicant shall reference the latest version of the New York State Standards and Specifications for Erosion and Sediment Controls guide on the plans.* **Addressed.**
5. *The Applicant shall provide the location of the concrete washout area on the plans.* **Addressed.**
6. *The Applicant shall show the intended location of the equipment staging area on the plans.* **Addressed.**
7. *The Applicant shall provide a detail for construction safety fence.* **Addressed.**
8. *The Applicant provided a tree protection detail. The Applicant shall note which trees are proposed to be protected on the plans.* **Addressed.**
9. *The Application shall provide a typical catch basin detail on the plans.* **Addressed.**
10. *The Applicant shall provide a pipe trench detail on the plans.* **Addressed.**
11. *The Applicant shall provide planting details.* **Addressed.**
12. *The Applicant shall provide a cut/fill table on the plans.* **Not Addressed. The Applicant indicated that the cut/fill volumes will be provided in the next submission.**
13. *Based on the detail for the rainwater harvesting system, it appears that the storage system has a header pipe system of 15-inch diameter pipes leading to the 48-inch storage pipes. The Applicant shall revise the site plan to show the header configuration.* **Addressed.**
14. *The Applicant shall revise the Permanent Stormwater Facilities Maintenance Schedule to remove all facilities not proposed for this project.* **Addressed.**
15. *The Applicant shall revise the Required SWPPP Contents per GP-0-20-001 notes to remove all references to the Amended Stormwater Pollution Prevention Plan for Kent Materials.* **Addressed.**
16. *Based on the Erosion and Sediment Control Plan, it appears that some steep slopes will be disturbed during installation of the rainwater harvesting system. The Applicant shall indicate if any erosion control matting is proposed to be used. The Applicant shall also provide a construction detail.* **Addressed. The Applicant provided a detail for geotextile anchoring that specifies Curlex Single Net Erosion Control Blanket. The detail includes a note that the matting is to be installed on all 2H:1V slopes.**
17. The Applicant shall revise all statements in the SWPPP related to connecting the rainwater harvesting system to the existing irrigation ponds.
18. The Applicant shall revise the SWPPP to remove references to Design Line 4.
19. The Applicant shall clarify the dewatering methods for all proposed water features within the mini golf course (i.e., discharge location, frequency/schedule, etc.).

20. The Applicant shall ensure that ample separation is provided between the proposed cistern and the existing stormwater drainage system (near the inlet to the cistern) and the existing sewer line to the North.
21. The Applicant shall provide a cross-section north of A1-A2 through the proposed cistern.

Please feel free to contact our office with any questions or concerns.

Sincerely,

Jennifer L. Martinez Torres, P.E.
Assistant Consulting Town Engineer

On behalf of,

Steven C. Robbins, P.E., LEED AP
Consulting Town Engineer

OPEN SPACE COMMITTEE

Telephone
(914) 277-5582
Fax
(914) 277-3790

MICHAEL BARNHART
CHAIRMAN

Town of Somers

WESTCHESTER COUNTY, N.Y.

SOMERS TOWN HOUSE
335 ROUTE 202
SOMERS, NY 10589

MEMO TO: Planning Board

FROM: Open Space Committee

RE: Heritage Hills Holdings – Miniature Golf Course and Cigar Bar

DATE: November 23, 2021

At our monthly meeting on November 18, 2021, a review and discussion of the plan to build a miniature golf course and cigar bar in Heritage Hills took place. The Committee has the following concerns regarding the proposal.

The project involves the removal of over 100 trees in a concentrated area that is attractively wooded and currently resembles its original forested appearance. Given the nature of the project, there is no way to compensate for the loss of tree cover. We are particularly concerned that should the business fail, the neighborhood will be left with a permanently altered landscape.

The project calls for additional parking and impervious surface, requiring the addition of stormwater infrastructure to the site. As always, we are concerned when we see infiltration units and catch basins combined with steep-sided curbing at the edges of paved areas. The effect is to funnel any amphibians towards stormwater infrastructure, a major source of mortality. Given the lack of a significant wetland in the area, the number of crossing amphibians is likely to be small, but their presence cannot be entirely discounted. Equally, all grassy swales should feature less than 1:4 sloping edges.

A rainwater harvesting system will be added, presumably to supply irrigation to the miniature golf course. We are concerned that this may alter the hydrology of the site and its surrounding environs. We see no analysis of the effects or plan for mitigation.

The landscaping plan along West Hill Drive South relies upon planting several species that are out of keeping with the forest type that will remain. Virginia witch hazel and American holly would not normally occur in this sort of rocky, upland deciduous forest. We understand the desire to screen the facility but suggest planting understory that would more commonly occur to preserve the natural

appearance as much as possible. We suggest spicebush and maple leaf viburnum. If a shrubby tree is wanted, we suggest flowering dogwood or hop hornbeam in place of the American holly. We appreciate the effort to rely upon native plantings, however.

INSITE
ENGINEERING, SURVEYING &
LANDSCAPE ARCHITECTURE, P.C.

November 22, 2021

Town of Somers Planning Board
335 Route 202
Somers, New York 10589

RE: Heritage Hills Holdings
a.k.a Somers National Golf Club
1000 West Hill Drive

Dear Chairman Currie and Members of the Board:

Enclosed please find five (5) paper copies and 6 USB drives of the following in support of a Site Plan Application, Steep Slopes, Tree Preservation and Stormwater Management and Erosion and Sediment Control Permit for the above referenced project:

- Site Plan Drawing Set (8 sheets), dated September 28, 2021 revised November 22, 2021.
- Stormwater Pollution Prevention Plan, dated November 22, 2021.
- Mini Golf Drawing Set by Harris Miniature Golf dated October 12, 2021.
- Draft Notice of Intent (NOI)
- MS4 SWPP Acceptance Form

At the October 13th Planning Board meeting the Board raised concerns over the reduction of vegetative screening along West Hill Drive South. The plans have been revised to relocate the proposed miniature golf course further into the project site. The previous plan removed 91 trees between the limit of disturbance and West Hill Drive South. The revised plan removes 43 trees between the limit of disturbance and West Hill Drive South which is a 53% decrease in trees to be removed in order to preserve the vegetative buffer along the street. In addition, the project proposes screening along the southern border of the miniature golf course and provides native trees to the north of the course to reestablish the understory forest layer.

With response to the comments offered by Steven Robbins, P.E. of Woodard & Curran in memorandum dated October 7, 2021, we off the following responses:

1. The applicant acknowledges the project is subject to the requirements of Chapter 93 of the Somers Code and shall obtain coverage under the SPDES General Permit. As part of the submission, applicant has submitted a SWPPP.

    a. Calculations of the required water demand have been provided demonstrating 100% RRv capacity can be credited by the proposed rainwater harvesting system (cistern).

    b. Information on the proposed cistern pump has been provided in the project details and sheet D-3.

    c. The plans have been updated to schematically show how the proposed rainwater harvesting system will supply water to the irrigation system. In lieu of connecting to the irrigation pond the rainwater harvesting system will connect to the upper end of the irrigation system. Valving will be installed on the main Irrigation feed line as well as the

3 Garrett Place, Carmel, New York 10512 (845) 225-9690 Fax (845) 225-9717
www.insite-eng.com

rainwater harvesting line so the upper end of the golf course can be fed by either system. The rainwater harvesting system will serve as the primary means for irrigating the upper end of the gold course by the club house. However, should the rainwater cistern ever become empty the club will be able to switch over and use the irrigation ponds as a backup water supply.

d. Maintenance and inspection requirements for the rainwater harvesting system have been added to Section 5.3 of the SWPPP.

e. Pipe sizing calculations will be provided in the final project SWPP.

f. The new impervious areas have been updated to reflect the current design. A separate figure, Figure 4, in the SWPPP outlines the existing and proposed impervious areas within the project limits of disturbance.

g. A table of new and existing impervious cover has been included in Section 1.3 of the project SWPPP.

h. The time of concentration (Tc) flow paths used in HydroCAD are consistent with the delineations shown on the project drainage maps.

i. The level spreader has been eliminated, and a direct pipe connection has been made. Based on a site visit the pre- and post-development drainage areas have been adjusted to reflect the presence of a small swale and berm. The berm reduces the amount of overland flow towards the west from what was previously contemplated.

j. Sizing Calculations for the proposed swale will be provided in the final project SWPPP.

k. The construction sequence for the proposed project has been provided on drawing SP-3, of the project plans.

l. A draft Notice of Intent (NOI) and MS4 SWPPP Acceptance form has been provided as requested has been provided as requested.

m. The MS4 SWPPP Acceptance Form has been provided as requested.

n. A Contractor Certification Statement has been included as an appendix to the project SWPPP.

o. A maintenance agreement will be provided in the next submission.

2. No retaining walls are proposed outside of the miniature golf course. A retaining wall detail for the boulder retaining wall located within the miniature golf course can be found on sheet 9 of 10 in the Harris Miniature Golf drawing set.

3. The proposed walkway within the miniature golf course can be found on sheet 6 of 10 of the Harris Miniature Golf drawing set.

4. The latest version of the New York State Standards and Specifications for Erosion and Sediment Controls guides are referenced on the project plans.

5. The location of the concrete washout has been provided on drawing SP-3.

6. The intended location of the equipment staging area has been added to drawing SP-3.

7. A detail for construction fence has been added on detail sheet D-3.

8. The tree protection construction fence location has been added to drawing SP-3 illustrating trees to be protected.

9. A typical catch basin detail has been provided on drawing D-3.

10. A pipe trench detail has been added to drawing D-3.

11. Planting details are provided on drawing D-2.

12. The cut / fill values will be provided in the next submission.

13. The header pipe configuration as noted on the cistern detail is now shown on the project site plan as well.

14. The stormwater facilities maintenance schedule has been revised to remove all facilities not proposed for this project.

15. References to "Kent Materials" have been removed from the project plans.

16. A construction detail for the erosion control matting/blanket has been added to drawing D-3.

With response to the comments offered by David Smith, Town Planner in memorandum dated October 8, 2021, we off the following responses:

1. Cross sections have been provided on drawing D-2 to illustrate vegetative buffer between the road and the miniature golf course.

2. The proposed site plan illustrates an alternative layout to the September 28th submission relocating the miniature golf course further into the site to maintain existing vegetation along the property line.

3. The water features on the golf course will be supplied by the onsite water system. The water features will recycle water through the system and will need water added occasional as a result of evaporation. Overflow pipes are provided in the water features which are directed to the rainwater harvesting system.

4. The applicant acknowledges that historic references shall be incorporated into the miniature golf layout and at the appropriate time will consult with the Town Historian.

If you have any questions or comments regarding this information, please feel free to contact our office. We look forward to discussing this application with you at your December 8, 2021 meeting.

Very truly yours,

INSITE ENGINEERING, SURVEYING & LANDSCAPE ARCHITECTURE, P.C.

By: _____
Richard D. Williams, Jr., PE
Principal Engineer

RDW/kmg

cc: Q. Lew, Heritage Hills Holdings
B. Lansky

Insite File No. 21184.100

DUNN& SGROMO ENGINEERS, PLLC

5800 HERITAGE LANDING DRIVE, EAST SYRACUSE, NEW YORK 13057
Telephone (315) 449-4940 Facsimile (315) 449-4941

November 19, 2021

David B. Smith, Consultant Planner
Town of Somers Planning Department
335 Route 202
Somers, New York 10589

Re: Independent Living at the Paramount of Somers
Town of Somers, Westchester County, NY
Job No. 1262.003

Dear Mr. Smith

Thank you for taking the time to meet with our team on this exciting project. Based on our meeting, we would like to present our project in a preliminary format to the Town Planning Board.

Being that this project is in the early phases of design, this would be a great opportunity for the Board to provide us with feedback on our Preliminary Design so we may take into account their thoughts. This input will help us as we formulate our design moving forward.

We have provided 10 copies of the Overall Site Plan and Independent Living Project Plan and a CD containing the electronic version of both plans. We have also included the Request for Informal Appearance before Planning Board, along with a check in the amount of $300.

Sincerely,

Gregory Sgromo, P.E.

GS/mbs
Enclosures

Cc: Mr. Charles Kriegel (w/ enclosures via email)
Mr. Michael Salamon- CareRite Centers, LLC (w/ enclosures via email)

7/05

RECEIVED
NOV 22 2021
PLANNING-ENGINEERING
TOWN OF SOMERS

TOWN OF SOMERS PLANNING BOARD
REQUEST FOR INFORMAL APPEARANCE BEFORE PLANNING BOARD

FEE: $150 WITHOUT CONCEPTUAL PLAN **$300 WITH SKETCH PLAN REVIEW**
FEE PAID: _____ **DATE PAID:** _____

I. IDENTIFICATION OF APPLICANT:

A. OWNER: Plumbrook Realty LLC SUBDIVIDER: _____
ADDRESS: 180 Sylvan Ave ADDRESS: _____
Englewood Cliffs NJ. 07632
TELE #: _____ TELE #: _____

B. SURVEYOR: _____ TELE #: _____
ENGINEER: DUNN AND SGROMO ENG TELE #: 845-244-6375

II. IDENTIFICATION OF PROPERTY:

A. Project Name: PARAMOUNT at Somer Independent Living
B. Street abutting property: _____
C. Tax Map Design: Sheet: 28.17 Block: 1 Lot: 19.2
Zoning District: R40/R80
E. Project (does) (does not) connect directly into (State) (County) highway.
F. Proposed drainage (does) (does not) connect directly into channel lines established by the County Commission of Public Works.
G. Project site (is) (is not) within 500 feet of Town boundary.
H. Proof that taxes have been paid. _____

III. BRIEF DESCRIPTION OF PROJECT PROPOSAL:
Independent Living Apartments & town houses on a vacant 43.927 Acre parcel.

It is the responsibility of the applicant to be knowledgeable of the law. The following are available at the Town Clerks Office: Master Plan, Zoning Ordinance, Site Plan Regulations, Subdivision Regulations, Road Specifications, State Environmental Quality Review Act, Wetland and Steep Slope Ordinances, as applicable.

The comprehensiveness of the material submitted will determine the extent of comments that the Planning Board can make on a sketch plan. No materials received after the submission date of this application will be considered by the Board.

Ten (10) copies of all plans and written reports are requested.

By submission of this application, the property owner agrees to permit Town officials and their designated representatives to conduct on-site inspections in connection with the review of the proposal.

The undersigned hereby requests an informal appearance before the Planning Board to discuss the proposed project.

_____ Date: 11/19/2021
Applicant

_____ Date: 11/19/2021
Owner

GREGORY SGROMO PE
APPLICANT/OWNER Agent

C:\Documents and Settings\tsavva.SOMERSNY\Local Settings\Temporary Internet Files\OLK124F\Somer_PE_InformalApplication_2002-07.DOC