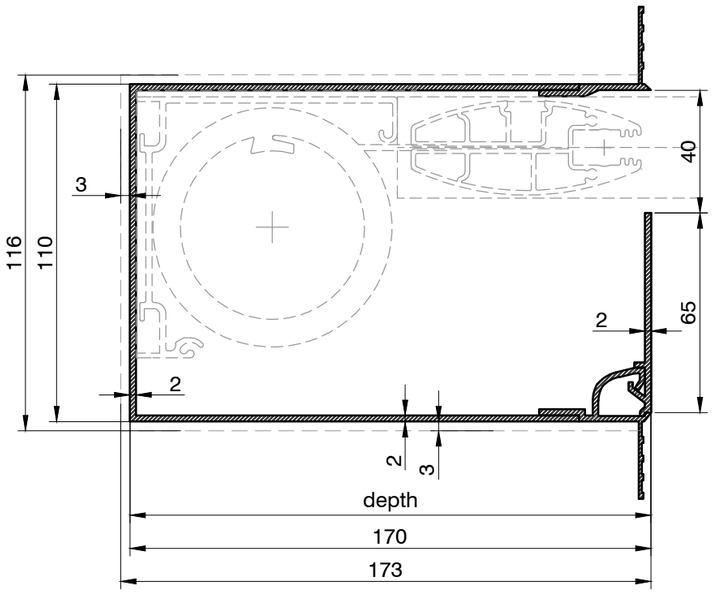

Head Box
R110x170 S

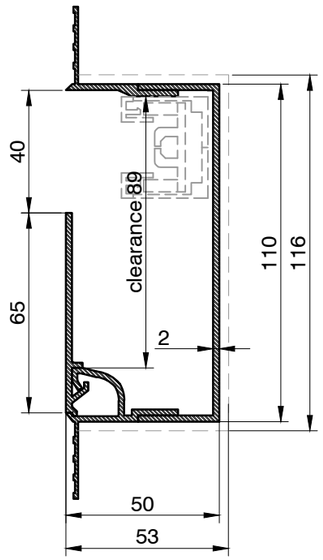

Side Box
R110x50 S

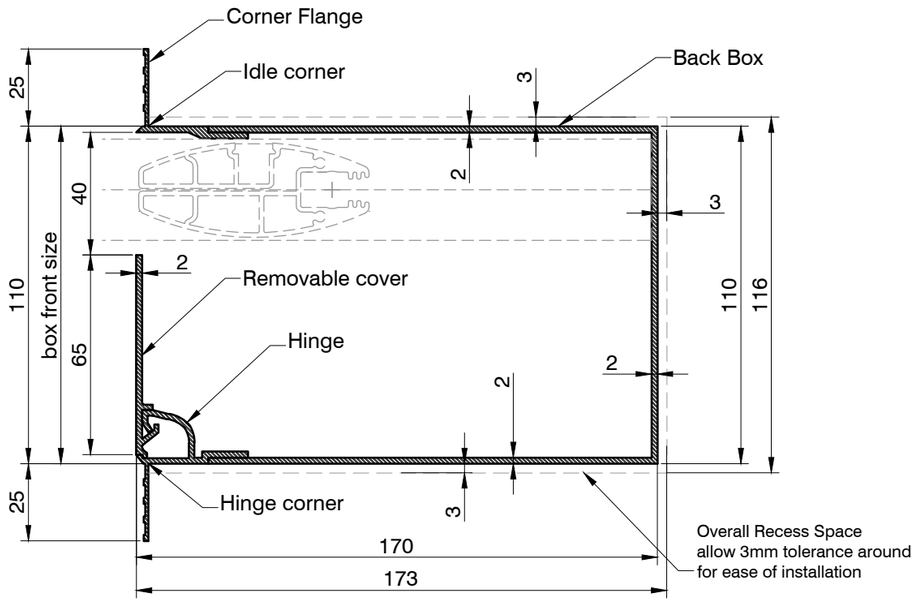

1:2 scale

Hembar Box
R110x170 S

Frame Layout

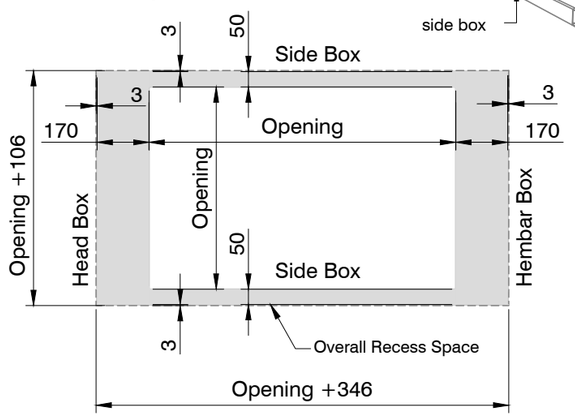

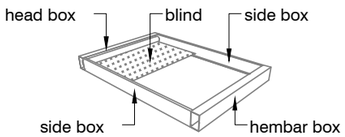

type — flange location

Blindspace R110x170 S

box front size — depth of the box

Sample Rooflight Aplication

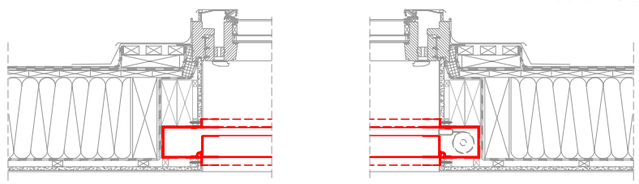

1:20 scale

Sample Installation Detail

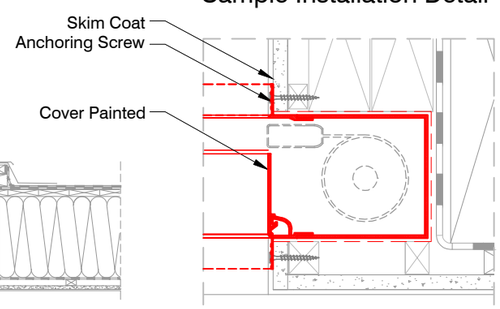

1:5 scale

Skim Coat Flanges Location Options:

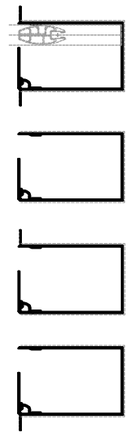

Standard - S

No Flange - N

Idle Corner Flange - I

Hinge Corner Flange - H

Product	Blindspace R110x170
Description	Recessed aluminium boxes and covers designed to conceal rooflights blinds.
Material	Anodized Aluminium, grade: front plate: EN 6063 T6 back plate: EN AW-1050A H14/H24
Finishes	- Unfinished for site painting - Primed for site painting - Pre-finished to RAL colour
Blind sizes	Blind Sizes to fit inside the box: SHY 85/60 ZIP 240v with 75mm hem bar visible wires Opening Width max: 3900mm Opening Length max: 2800mm Max area: 6.8m²
Installation	Boxes should be fixed on both sides. The finished plaster level should be flush with chamfered edge. Anchoring countersink screws through skim coat flanges are recommended.
Drawing	Standard Blindspace Boxes R110x170 for Rooflight Blinds
Item name	R110x170, R110x50
Date	October, 2017
Notes	Dimensions in mm Do not scale from drawing
Drawn by	M. Kozak, J. Dobosz
Approved	A. Sundelin
Revision	R-01 first issue

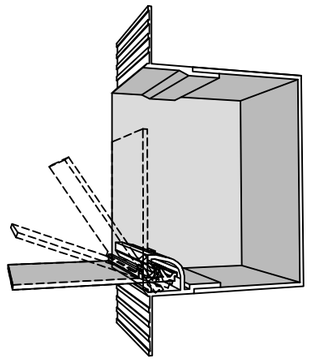

Print date	2017-10-19
Print file	blindspace r110x170 shy 85-60 zip 240v visible wires_v05.dxf
Page size	ISO A3 420x297
Remarks	ZRE

BLINDSPACE

